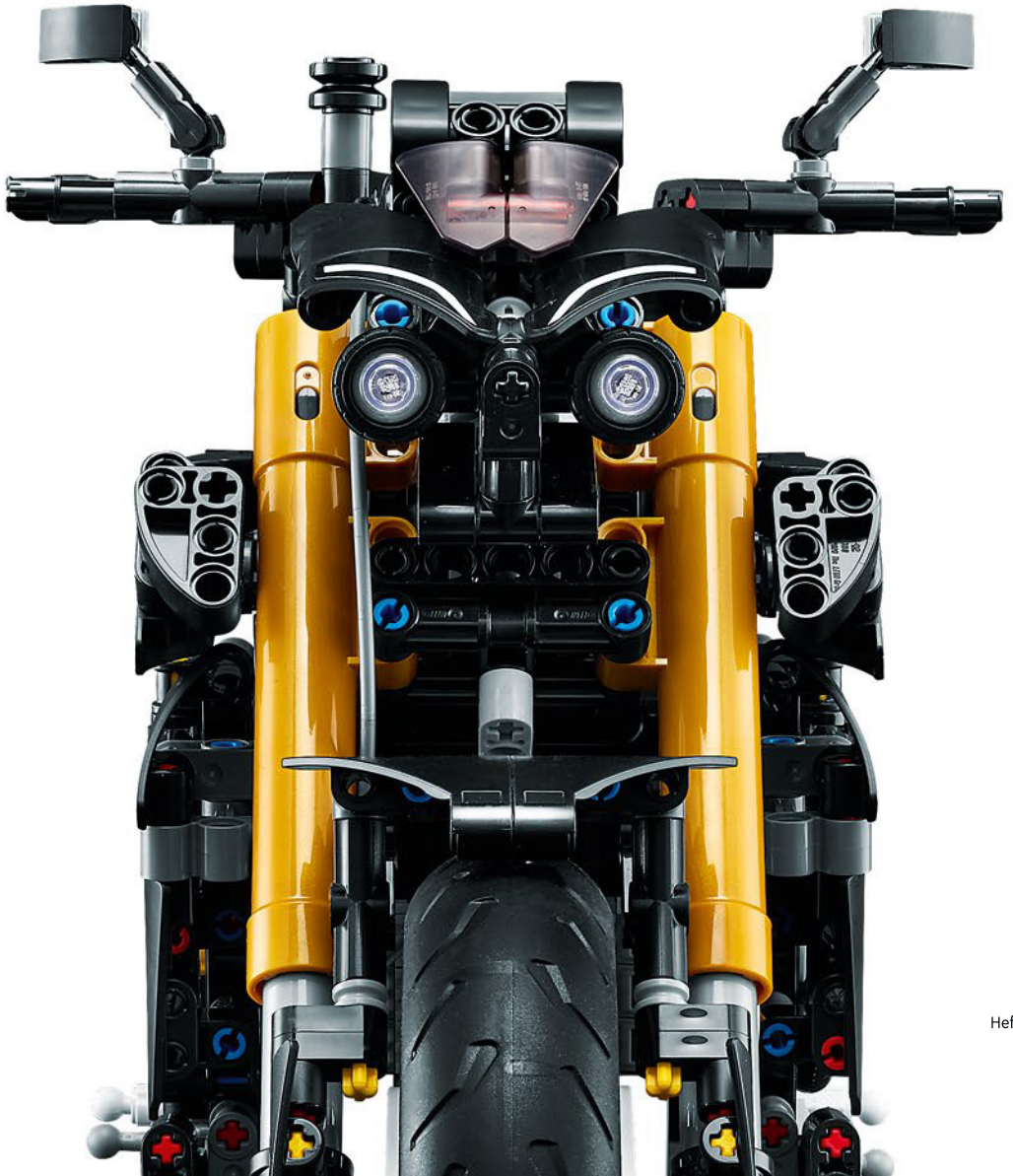

Booklet available in English on
Heft in deutscher Sprache erhältlich auf
Livret disponible en français sur
Libretto disponibile in italiano su
Folleto en español disponible en
如需中文版手册，请访问

LEGO.com/sustainable-packaging

LEGO® VIP

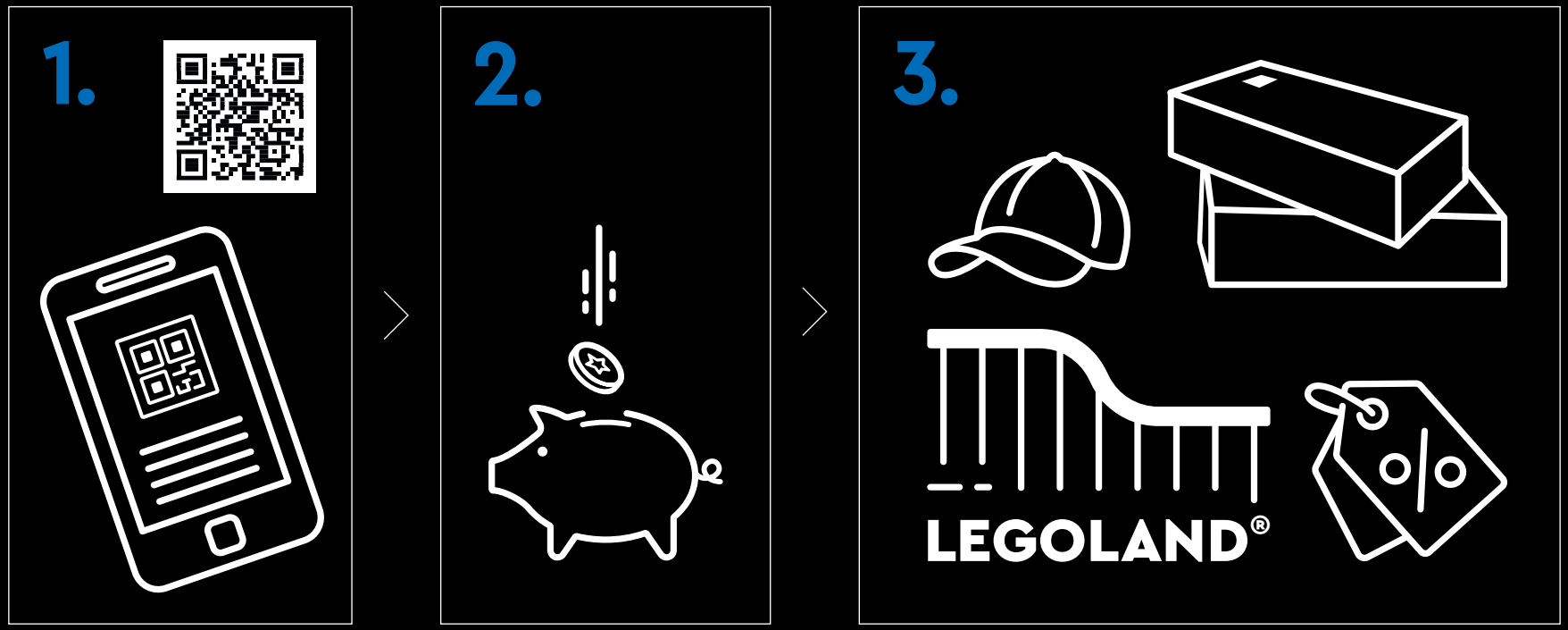

1. Sign up **2.** Earn points for purchases **3.** Redeem points for rewards, experiences, discounts & more | **1.** Melde dich an **2.** Sammle Punkte bei jedem Kauf **3.** Löse die Punkte für Belohnungen, Erlebnisse, Rabatte und Ähnliches ein | **1.** Inscrivez-vous **2.** Gagnez des points lors de vos achats **3.** Échangez vos points contre des récompenses, des expériences, des remises et bien plus encore | **1.** Iscriviti **2.** Guadagna punti con i tuoi acquisti **3.** Riscatta punti per premi, esperienze, sconti e altro ancora | **1.** Regístrate **2.** Gana puntos por tus compras **3.** Canjea puntos por recompensas, experiencias, descuentos y mucho más | **1.** Registe-se **2.** Ganhe pontos em compras **3.** Troque os pontos para prémios, experiências, descontos e muito mais | **1.** 注册 **2.** 购物赚积分 **3.** 用积分兑换奖励、体验、折扣等 | **1.** Zarejestruj się **2.** Zdobywaj punkty za zakupy **3.** Wymieniaj punkty na rabaty, przygody i inne nagrody | **1.** Zaregistrujte se **2.** Sbírejte body za nákupy **3.** Vyměňujte body za odměny, zážitky, slevy a spoustu dalšího | **1.** Zaregistrujte sa **2.** Získavajte body za nákupy **3.** Uplatnite si body a získajte odmeny, rôzne zážitky, zľavy a ešte viac | **1.** Regisztrálj **2.** Szerezz pontokat minden vásárlással **3.** Váltsd be pontjaidat jutalmakra, élményekre, kedvezményekre és egyebekre | **1.** Înscrie-te **2.** Câştigă puncte pentru achiziții **3.** Valorifică puncte pentru recompense, experiențe, reduceri și multe altele | **1.** Регистрирайте се **2.** Получавайте точки за покупки **3.** Използвайте точките за награди, услуги, отстъпки и т.н. | **1.** Reģistrējies **2.** Pelni punktus par pirkumiem **3.** Izmanto punktus, lai saņemtu balvas, izklaides iespējas, atlaides un daudz ko citu | **1.** Registreeru **2.** Teeni ostude eest punkte **3.** Lunasta punktide eest preemiad, elamused, allahindlused ja muu | **1.** Užsiregistruokite **2.** Pelnykite taškų už pirkinius **3.** Panaudokite taškus atlygiui, funkcijoms, nuolaidoms ir ne tik

YAMAHA MT-10 SP

Since 1955 when Yamaha introduced its first motorcycle model and immediately began winning races with it, the brand has built its reputation on cutting-edge innovation and unmatched performance in the realm of motorcycle competition. Once again, their radical Hyper Naked models break new ground. None more so than the ultra-high-performance Yamaha MT-10 SP, which stands at the pinnacle of the Hyper Naked model range. A vibrant design shaped to break the boundaries of convention the MT-10 SP takes you on a ride that's out of this world.

FROM THE DESIGN TEAM

LEGO® Technic Model Designer Lars Thygesen, a lifelong motorcycle enthusiast himself, developed the design in collaboration with Yamaha.

'It's always a thrill when we can create a model that pushes the limits – just like the real-life version. Thanks to the amazing Yamaha design team, we had access to all the materials and expertise we could ask for to ensure a smooth design process. It's an incredibly advanced vehicle, and we adapted a few of the features and functions to fit the scale, including the gearbox with new shifter drums and forks, which is the most intricate and realistic we've ever released.'

LARS THYGESEN
Model Designer
LEGO® Technic

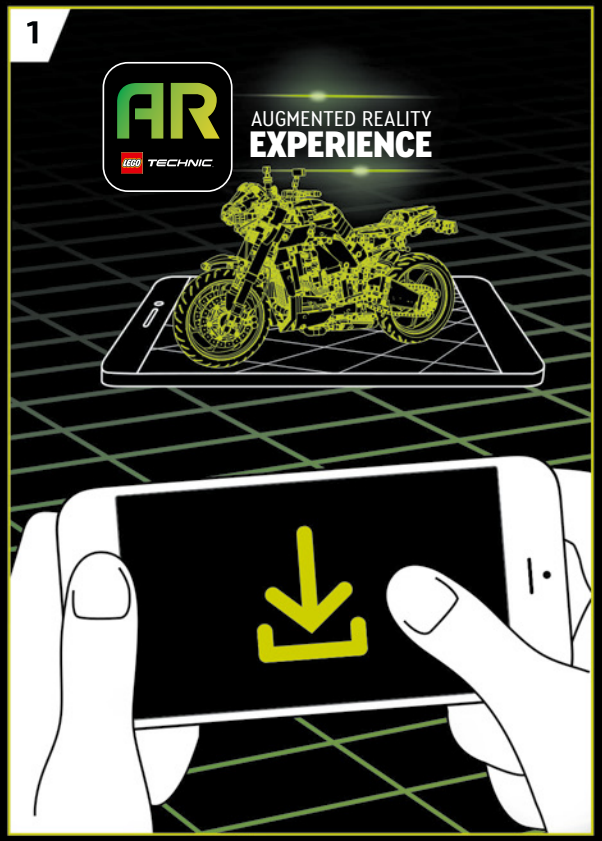

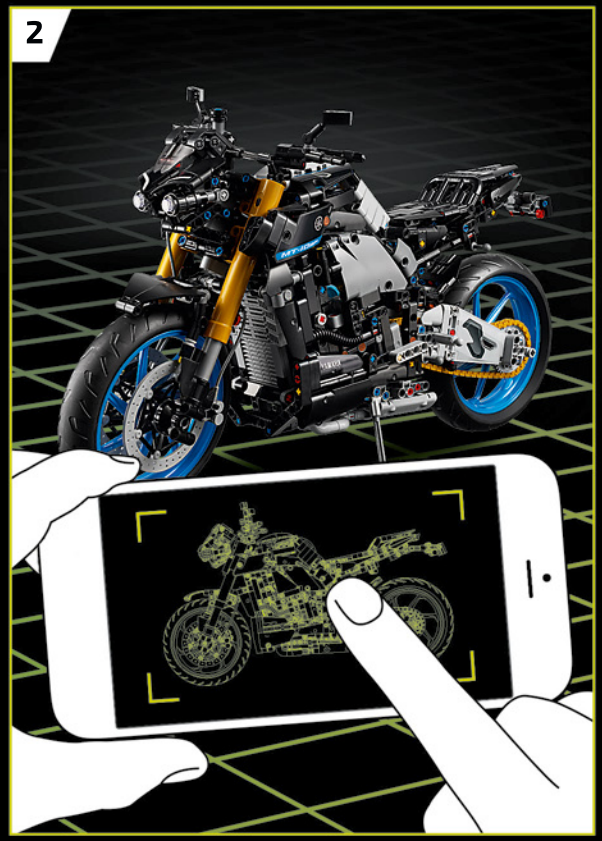

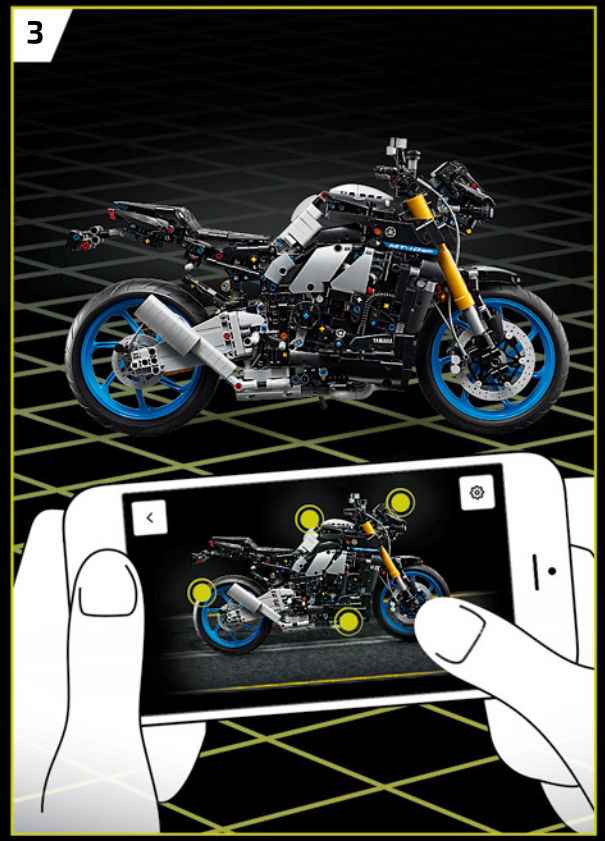

LEGO® TECHNIC™ AR

Experience AR

AUGMENTED REALITY EXPERIENCE
AR-ERLEBNIS
EXPÉRIENCE DE RÉALITÉ AUGMENTÉE
ESPERIENZA DI REALTÀ AUMENTATA

AR-Erlebnis starten
Expérience de RA
Esperienza AR
Experimenta la AR

EXPERIENCIA EN REALIDAD AUMENTADA
EXPERIÊNCIA DE REALIDADE AUMENTADA
增强现实体验
DOŚWIADCZENIE RZECZYWISTOŚCI ROZSZERZONEJ

Experiência RA
体验增强现实技术
Poznaj AR
Zažij rozšířenou realitu

ZÁŽITEK Z ROZŠÍŘENÉ REALITY
ZÁŽITOK Z ROZŠÍRENEJ REALITY
KITERJESZTETT VALÓSÁG (AR) ÉLMÉNY
EXPERIENȚĂ DE REALITATE AUGMENTATĂ

Zaži rozšírenú realitu
Éld át az AR élményt!
Experiență de realitate augmentată
Усетете добавената реалност

ДОБАВЕНА РЕАЛНОСТ
PAPLAŠINĀTĀS REALITĀTES IESPĒJAS
LIITREAALSUSLAHENDUS
PAPILDYTOSIOS REALYBĖS PATIRTIS

Izbaudi paplašināto realitāti
Katseta liitreaalsust
Patirkite PR

LEGO.com/devicecheck

Check for compatibility and FAQ
Kompatibilitätsprüfung und häufig gestellte Fragen
Vérifier la compatibilité et FAQ
Controlla la compatibilità e le FAQ
Información sobre compatibilidad y P+F

Verificar a compatibilidade e FAQ
查看兼容性与常见问题
Sprawdź informacje o zgodności z urządzeniami i najczęściej zadawane pytania
Kontrola kompatibility a časté dotazy

Kontrola kompatibility a časté otázky
Ellenőrizd a kompatibilitást és a GYIK-et!
Verifică compatibilitatea și Întrebări frecvente
Проверка за съвместимост и ЧЗВ

Informācija par saderību un bieži uzdotie jautājumi
Kontrolli sobivust ja KKK-d
Patikrinkite suderinamumą ir skaitykite dažniausiai užduodamus klausimus

YAMAHA MT-10 SP

The MT-10 SP reflects a thrill-seeking and creative spirit inspired by Japan's provocative underground motorcycle subculture. The bold design elements and Liquid Metal/Raven styling details perfectly frame the muscular, superbike-derived 998cc CP4 crossplane engine. Advanced features like an innovative Öhlins® Semi-Active Suspension System, full electronic suite and Quick Shift System result in a modern street bike that delivers huge torque, superior agility and sportbike-inspired performance.

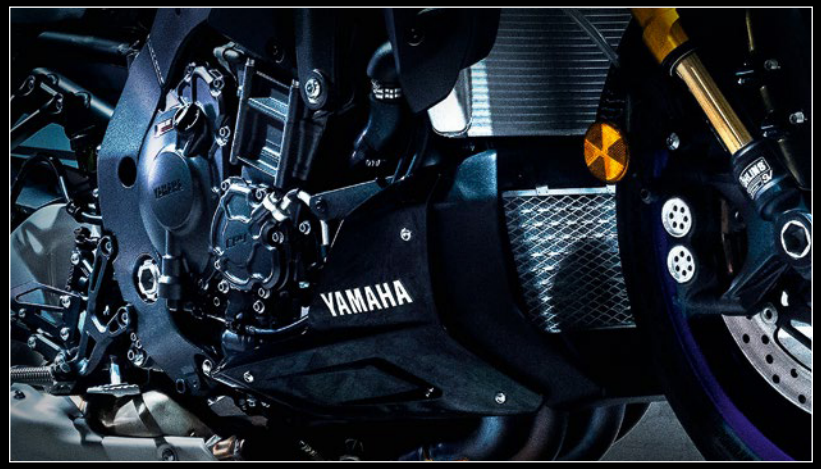

MT-10SP

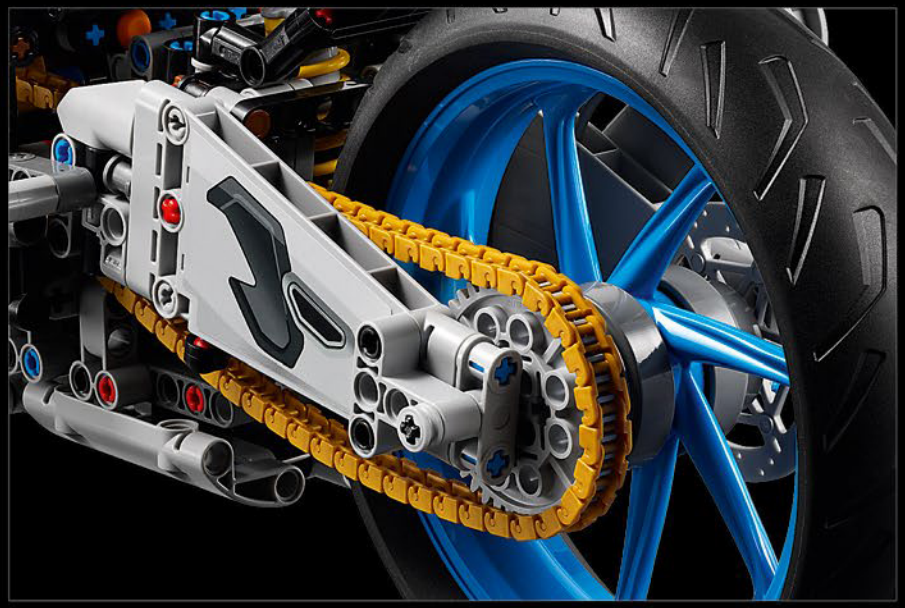

THE FLAGSHIP YAMAHA MT-10 SP

The LEGO® Technic Yamaha MT-10 SP closely captures the real-life model's striking colours, features and functions. Now with the LEGO Technic AR app, you can watch your model come to life. From the inline 4-cylinder engine to the aluminium frame and cutting-edge suspension, the model mimics the original. The authentic shifting drum and fork elements were developed to replicate the technologically advanced gearbox that is unique for this model to deliver an exceptional building experience.

MT-10SP
YAMAHA
MT-10SP
YAMAHA

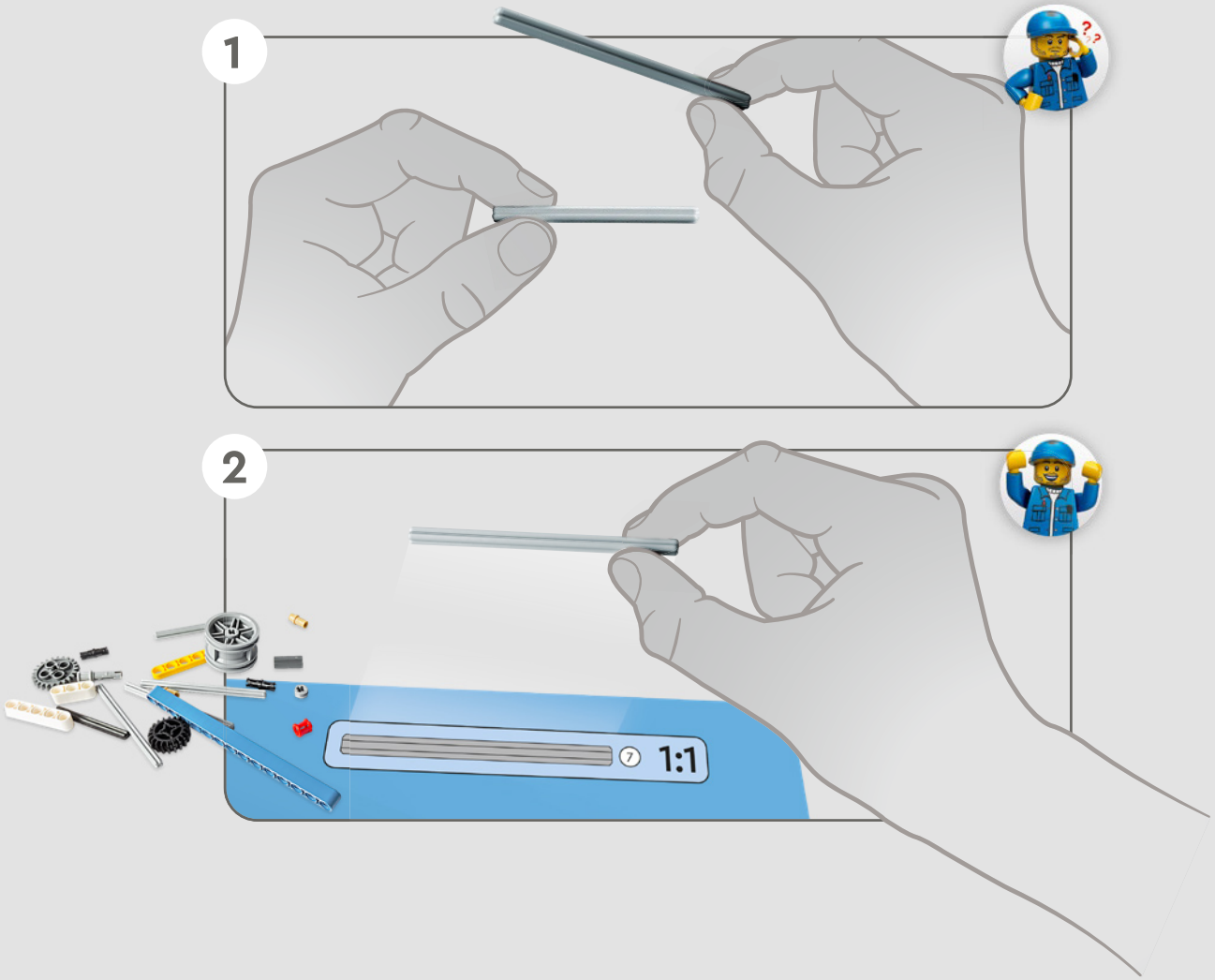
1
2
7
1:1

1

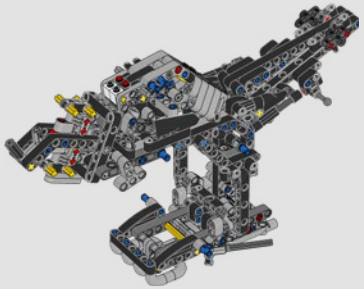

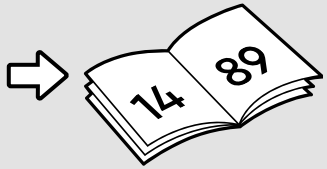
14
89

2

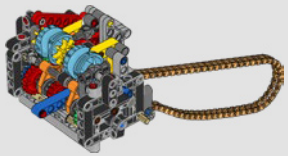

90
133

3

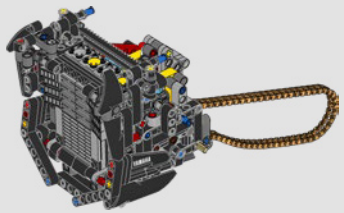

134
179

4

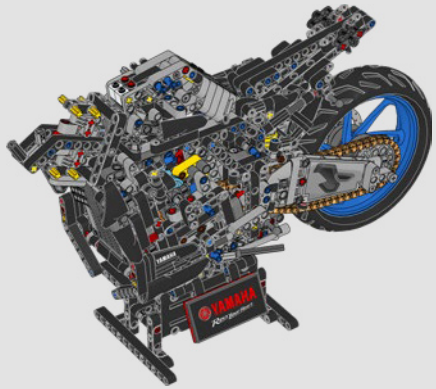

180 221

5

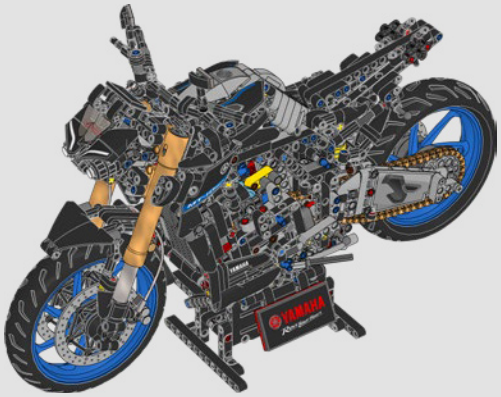

222 269

6

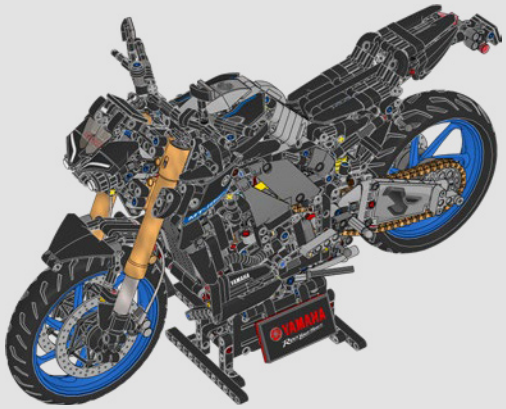

270 308

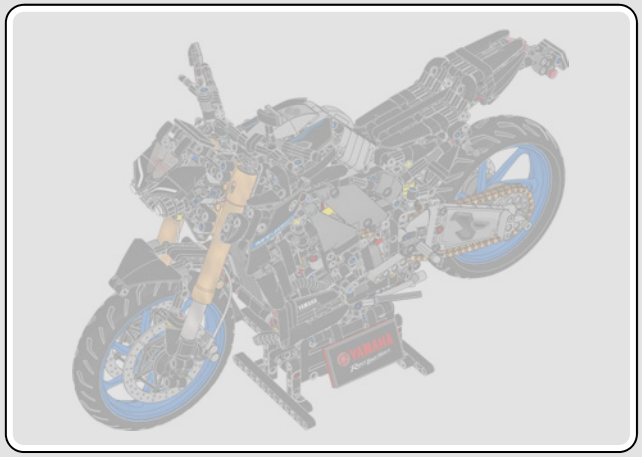

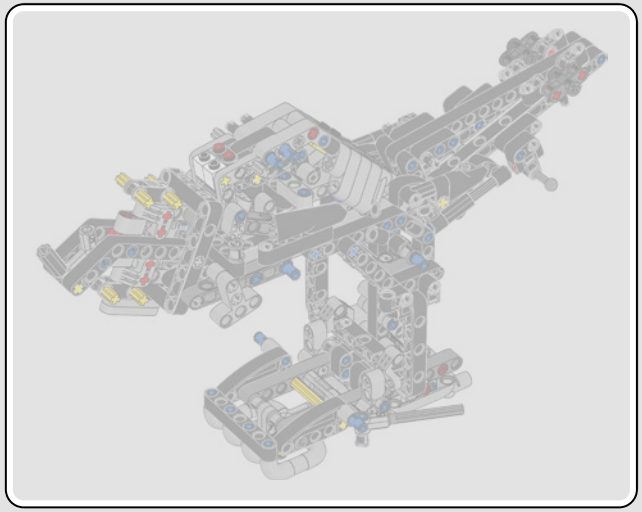

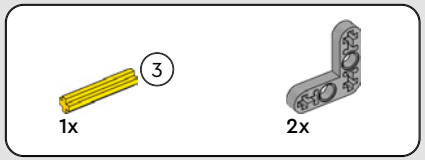

1

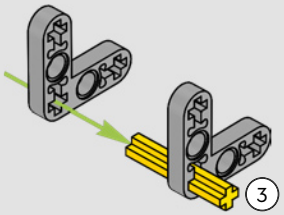

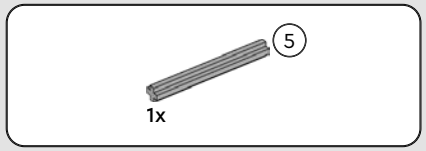

2

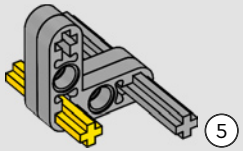

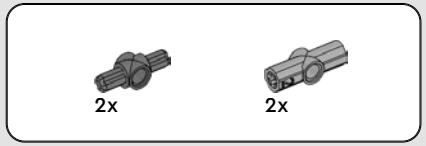

3

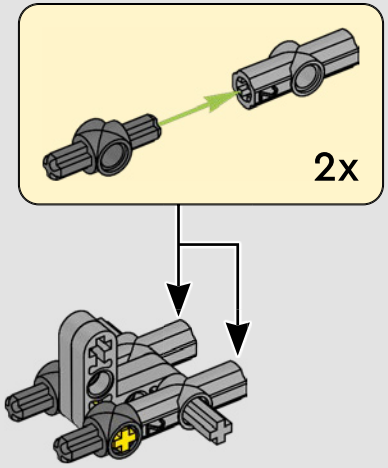

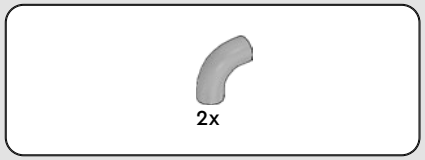

4

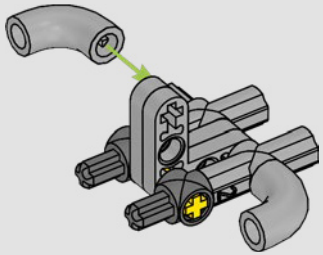

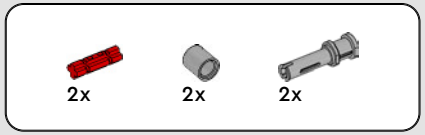

5

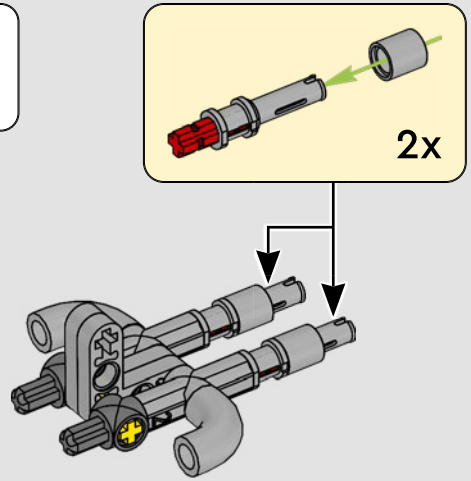

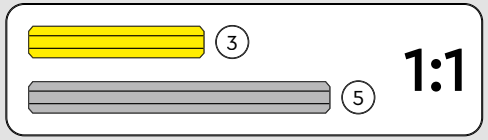

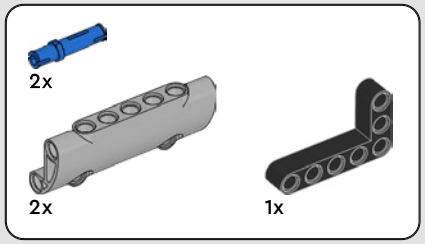

6

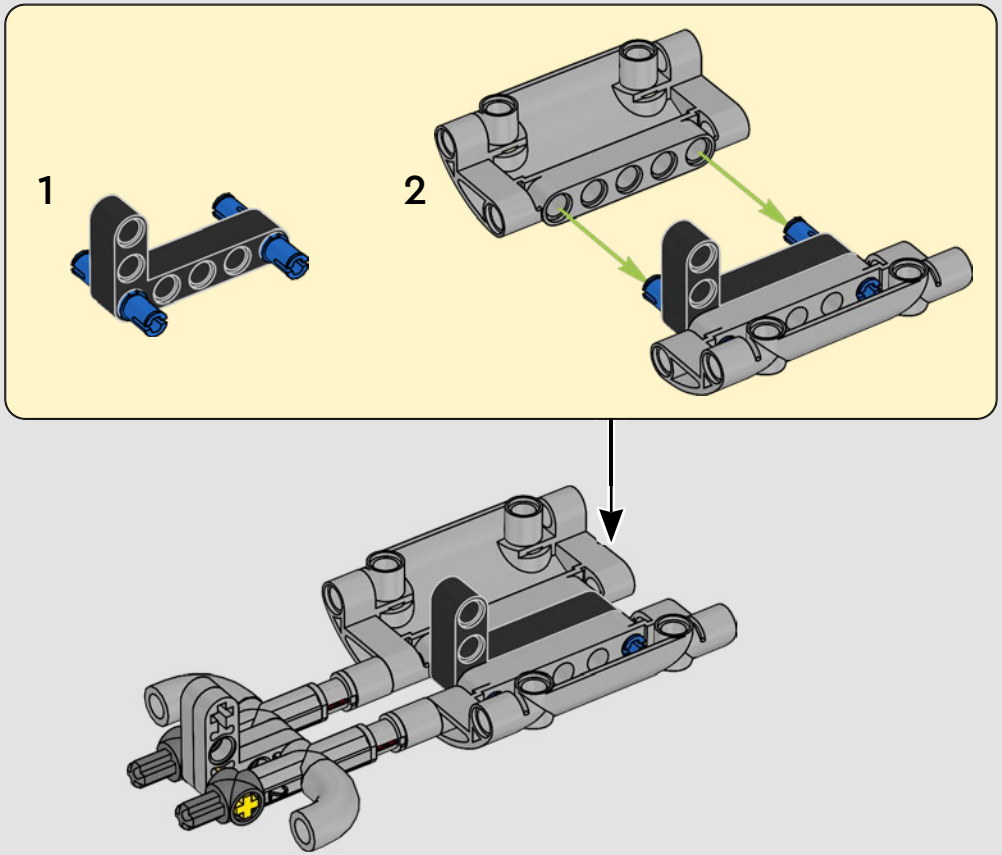

7

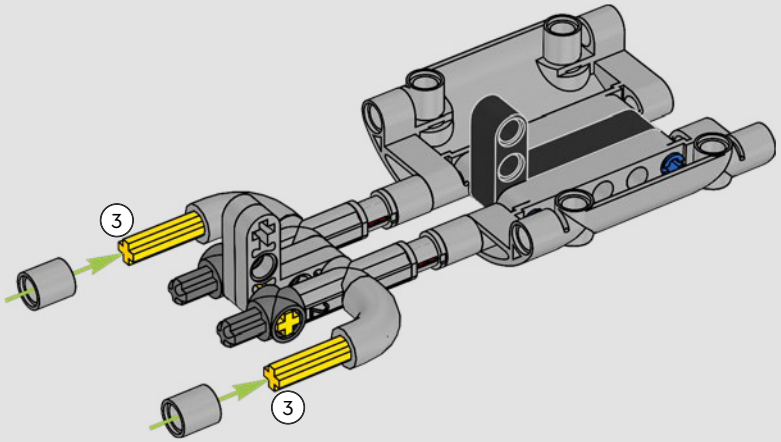

8

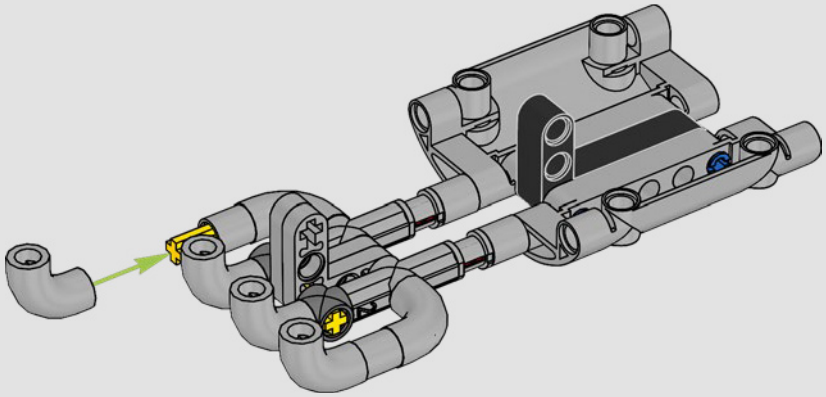

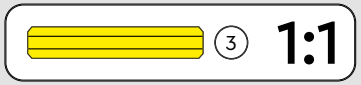

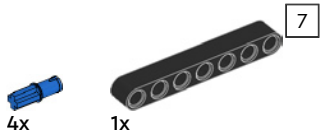

9

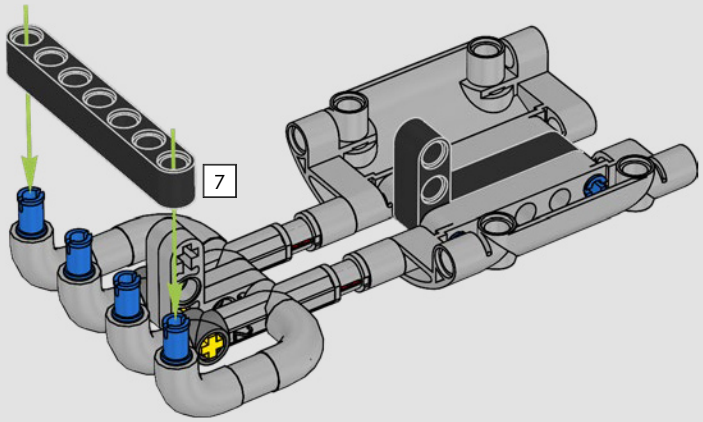

1:1

10

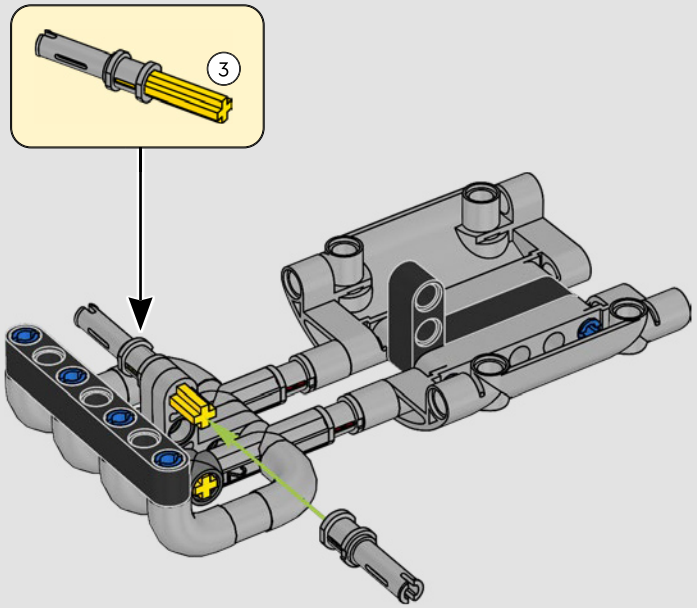

11

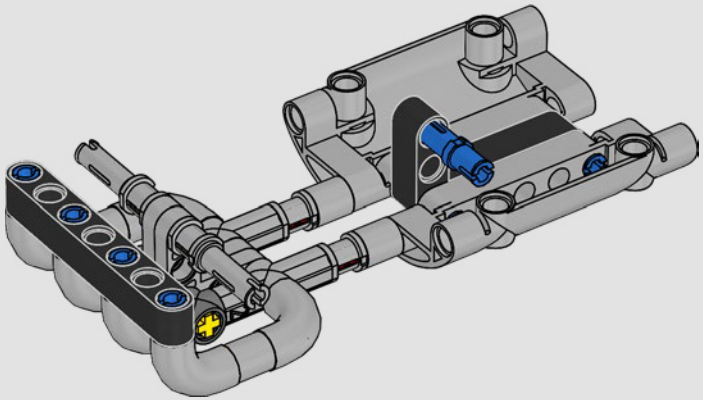

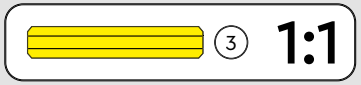

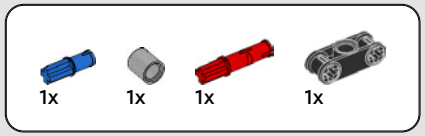

12

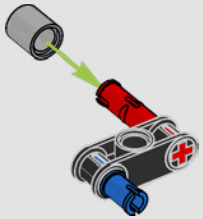

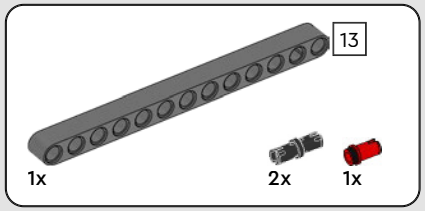

13

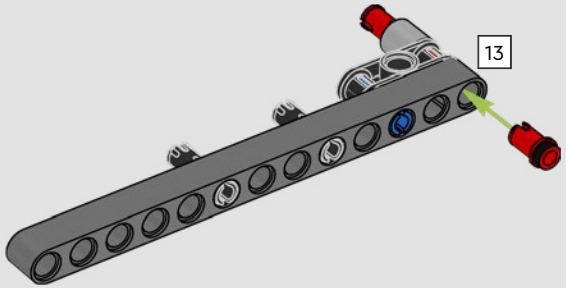

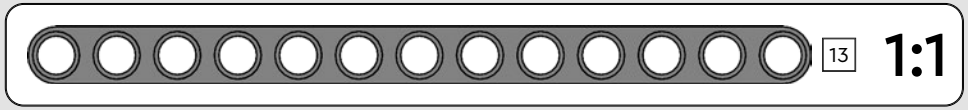

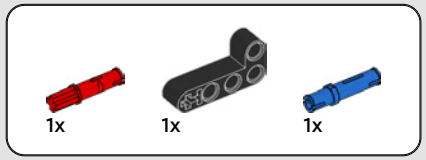

14

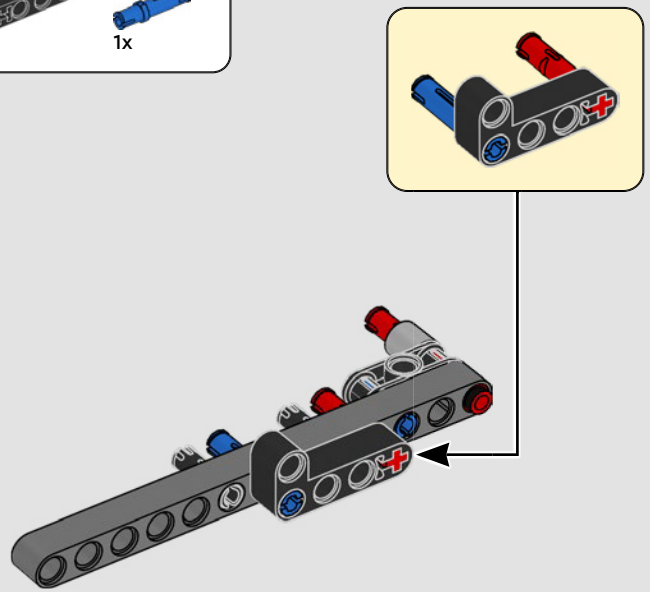

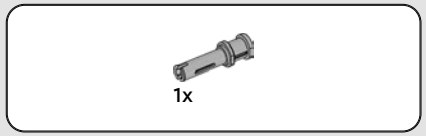

15

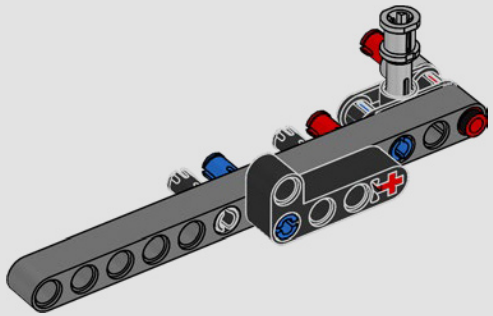

16

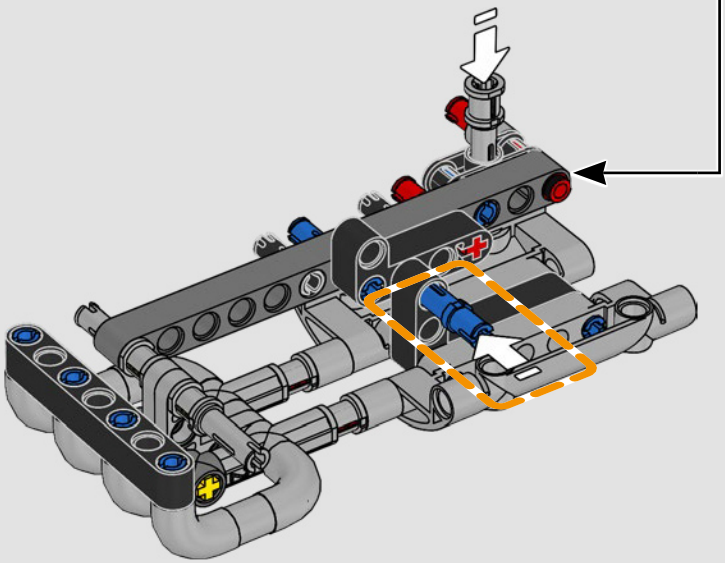

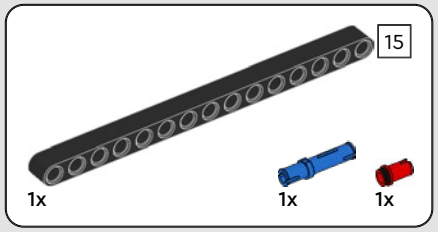

17

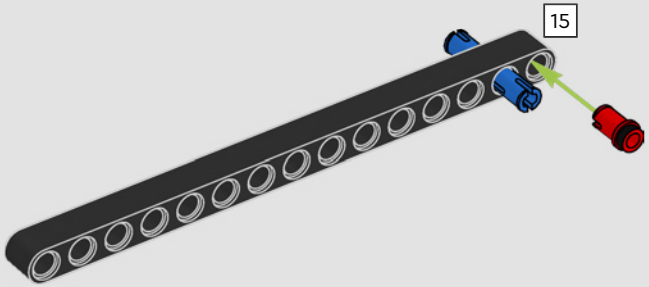

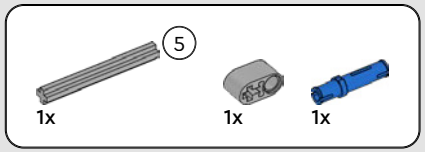

18

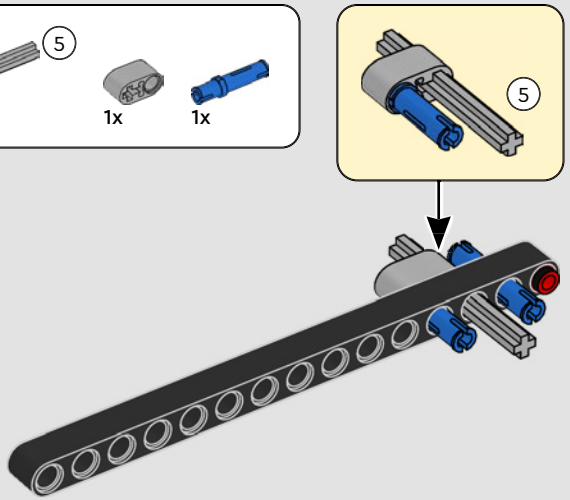

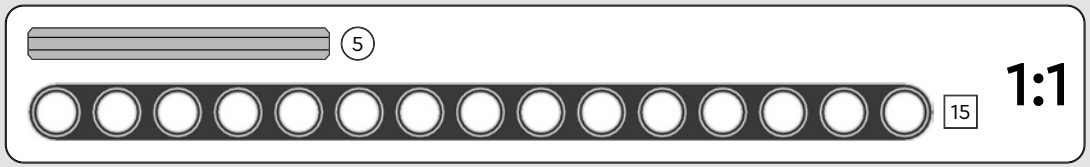

1:1

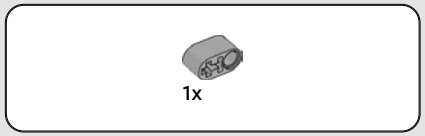

19

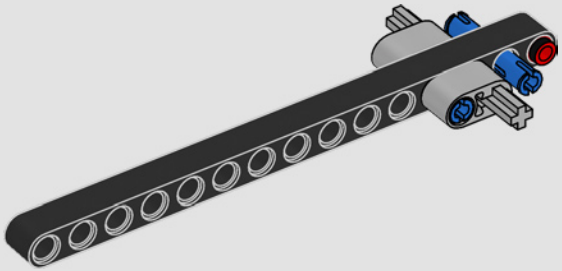

20

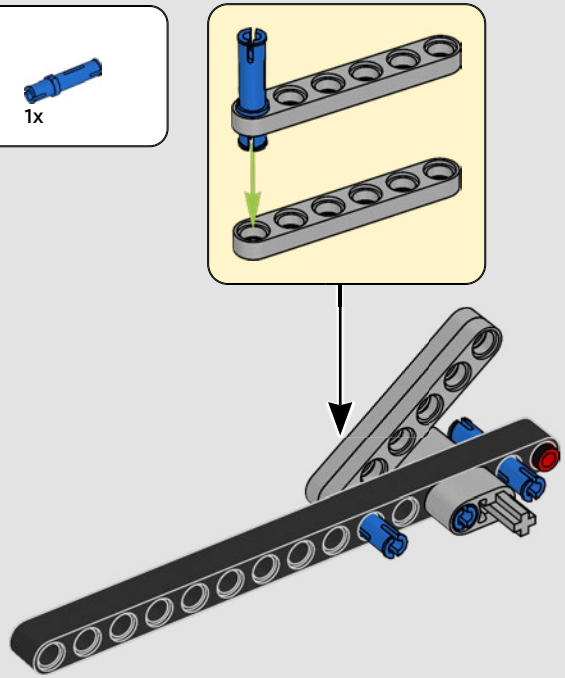

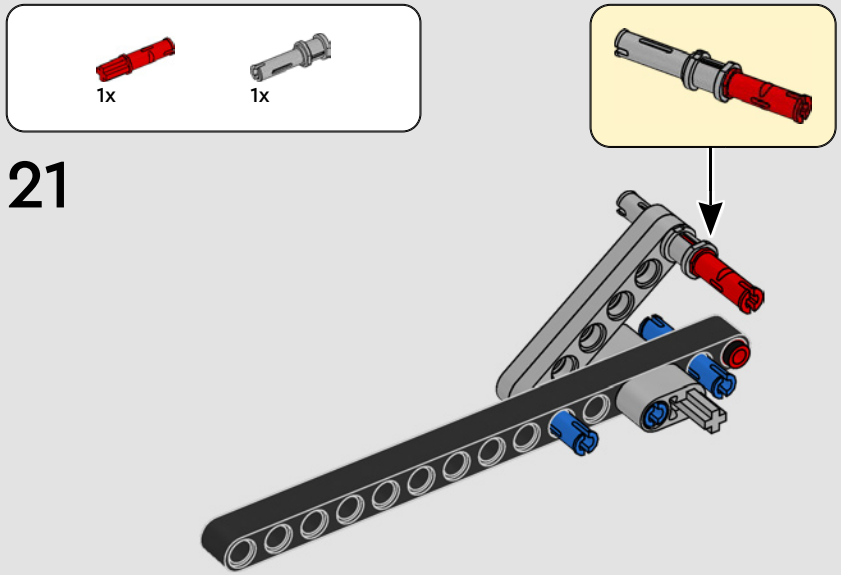
1x
1x
21

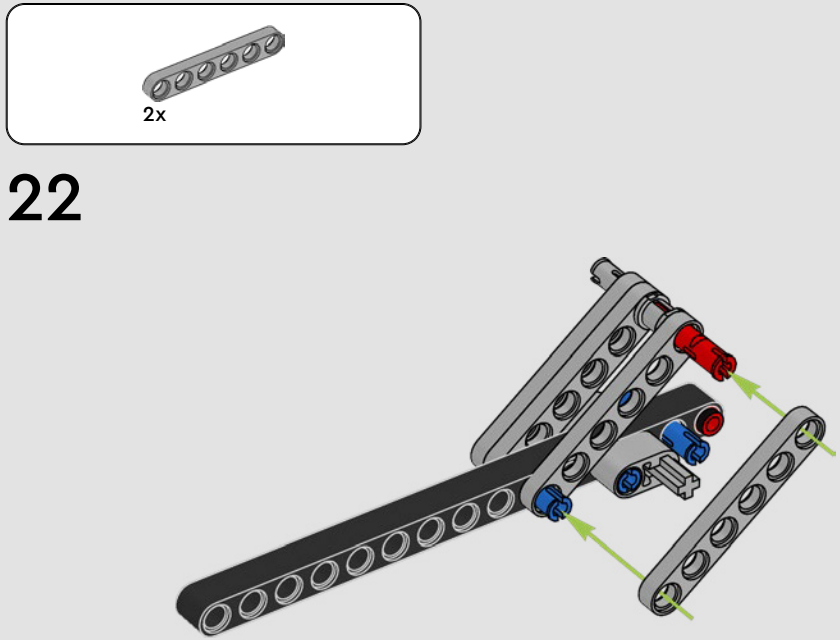
2x
22

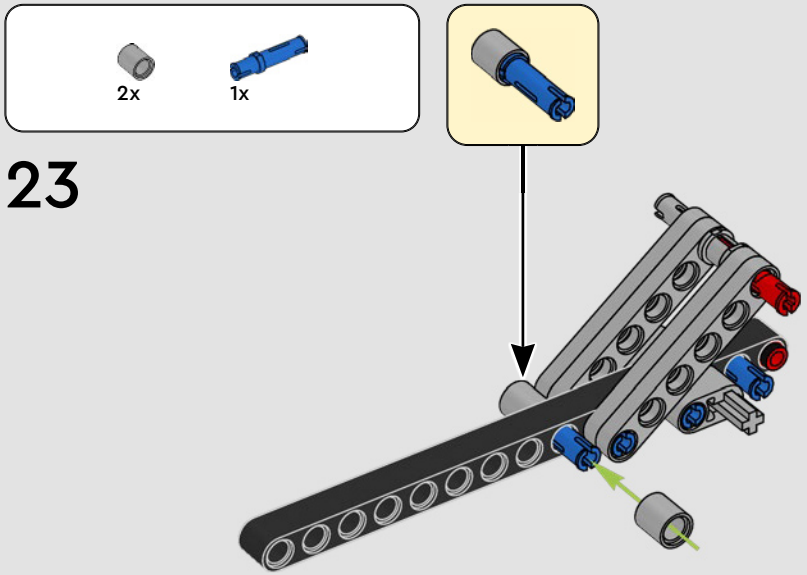
2x
1x
23

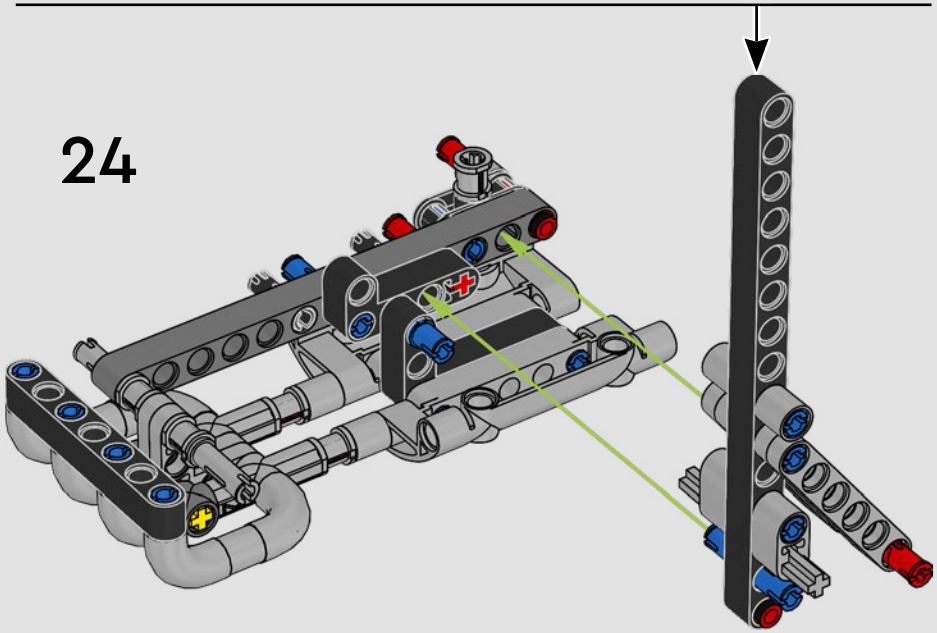
24

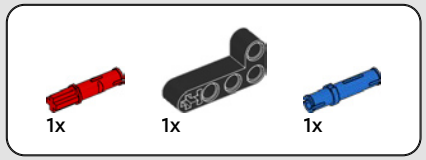

25

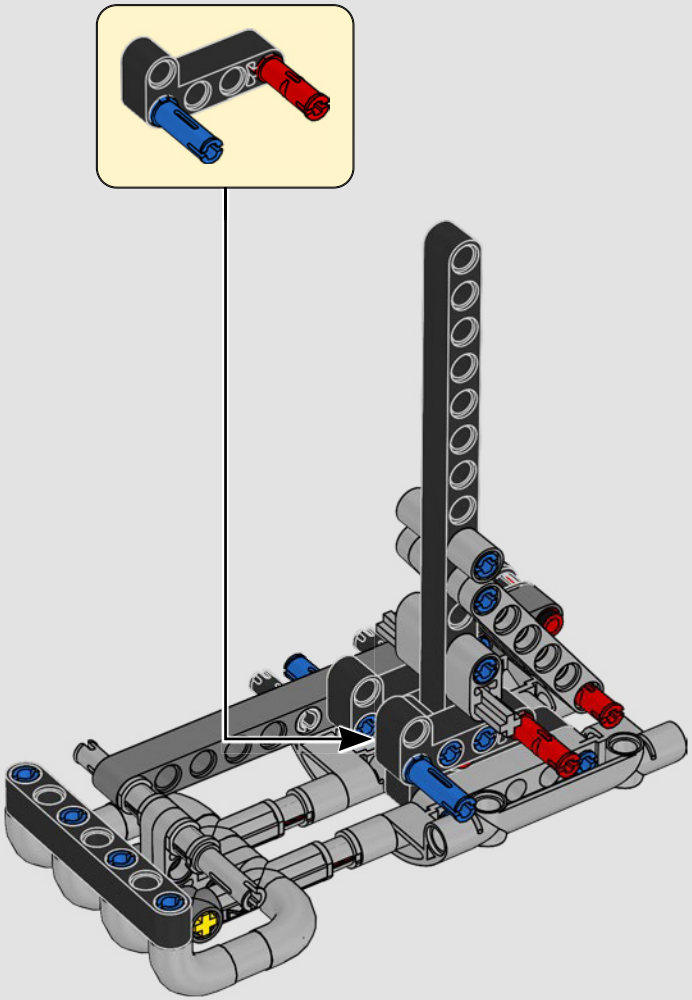

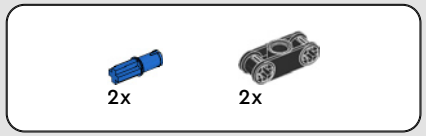

26

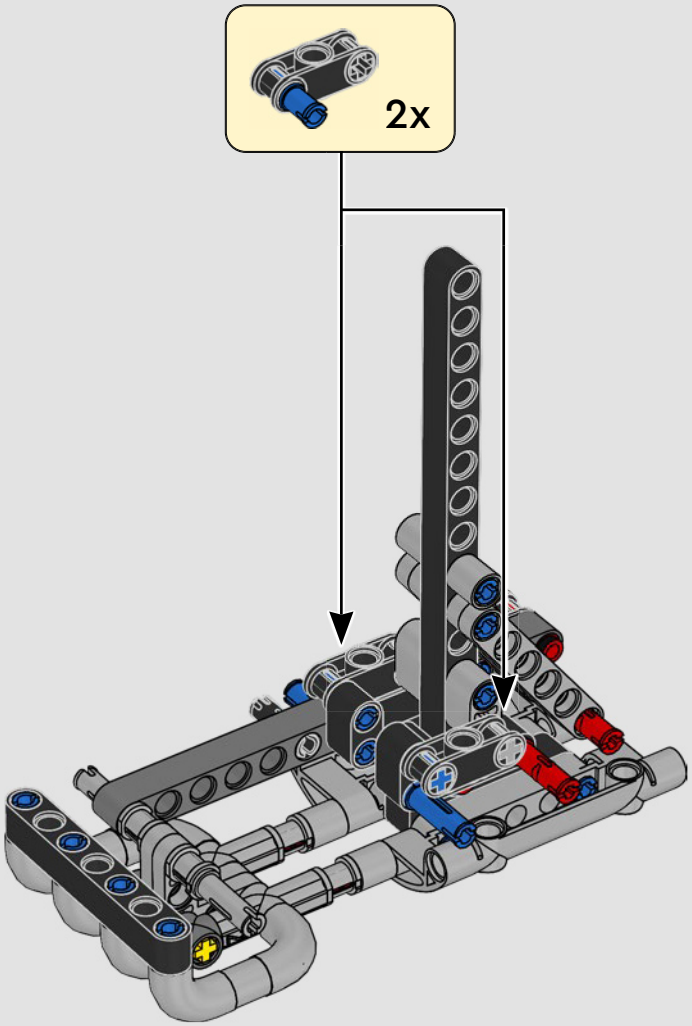

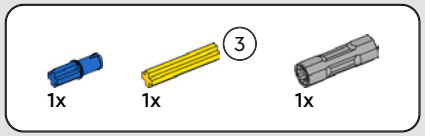

27

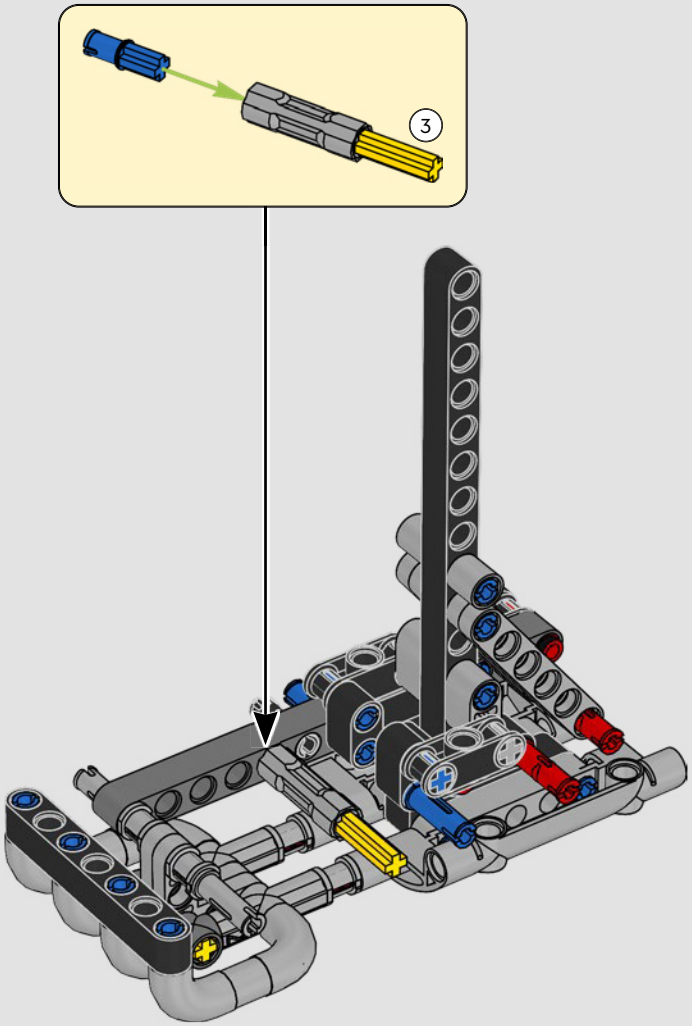

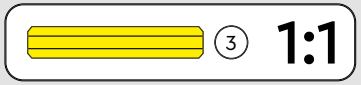

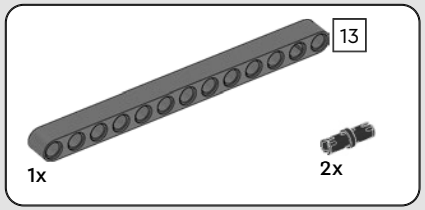

28

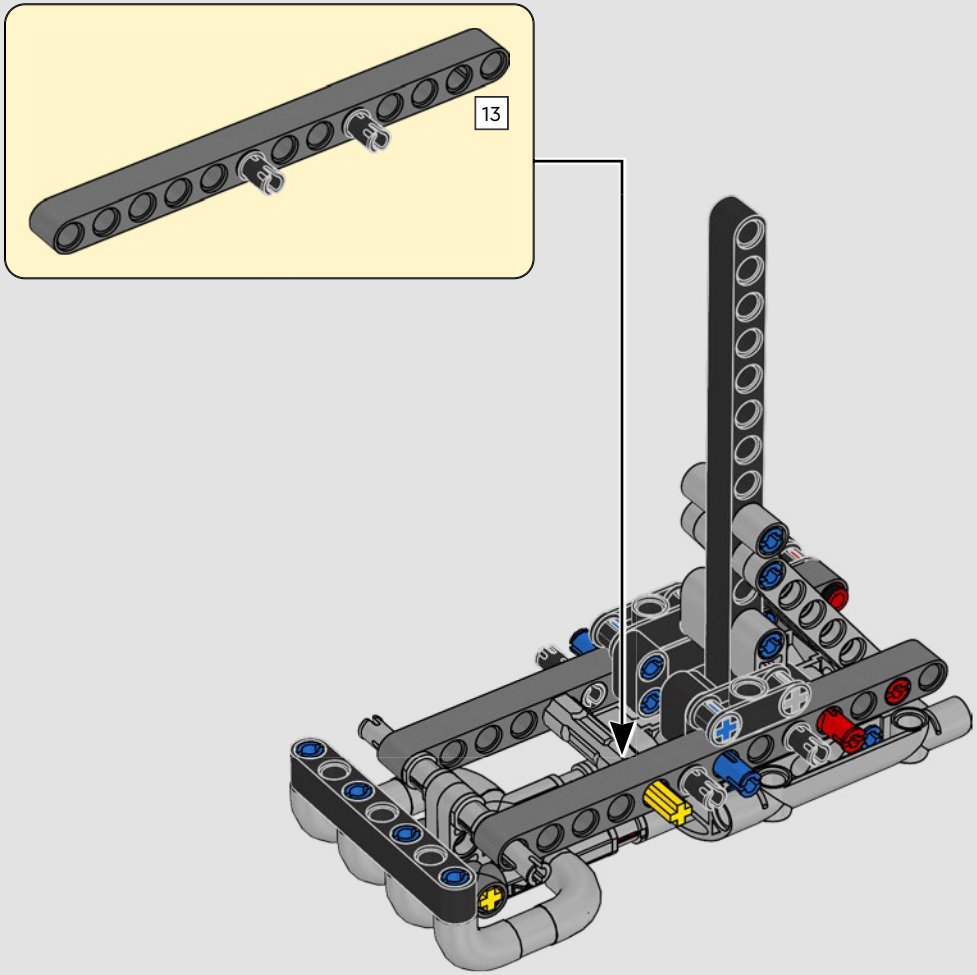

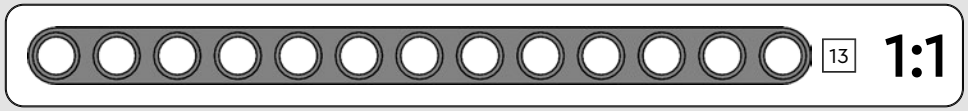

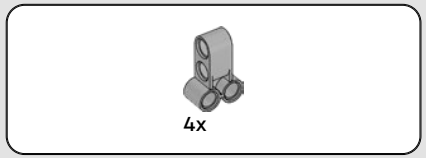

29

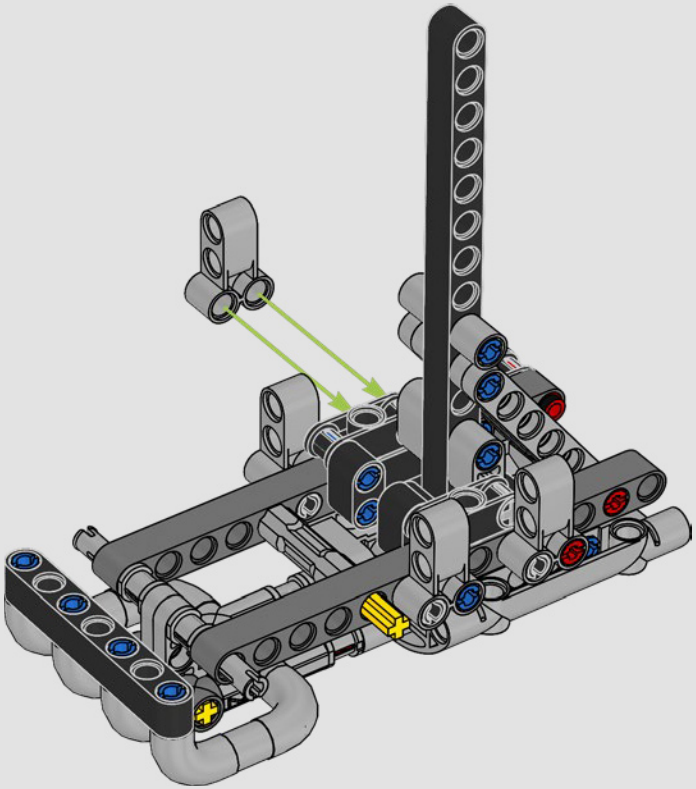

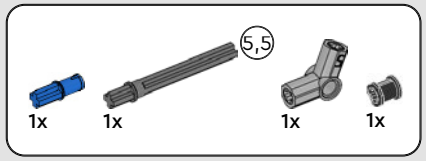

30

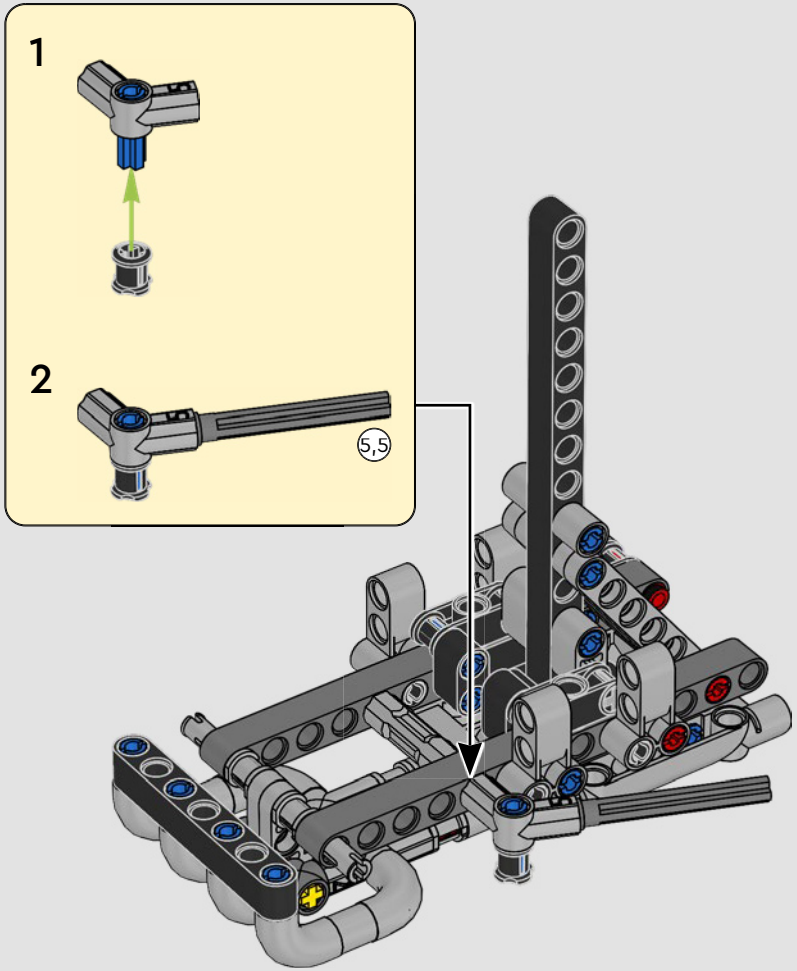

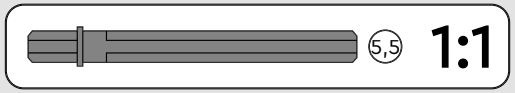

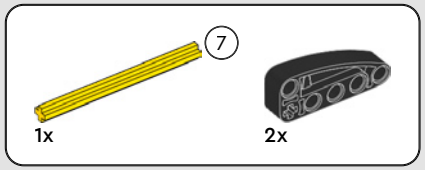

31

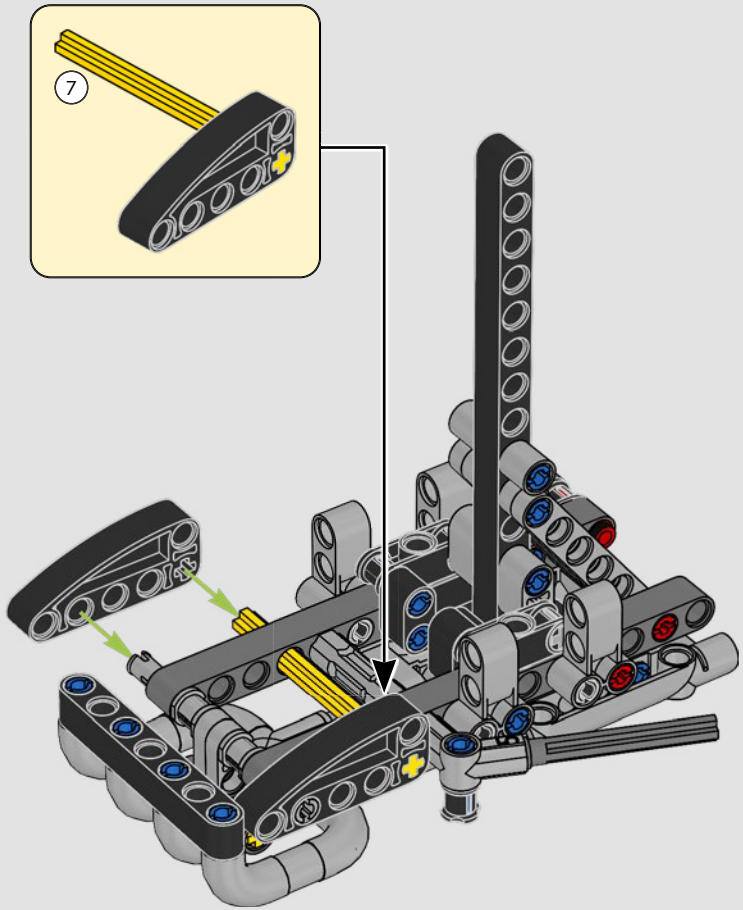

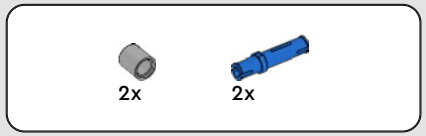

32

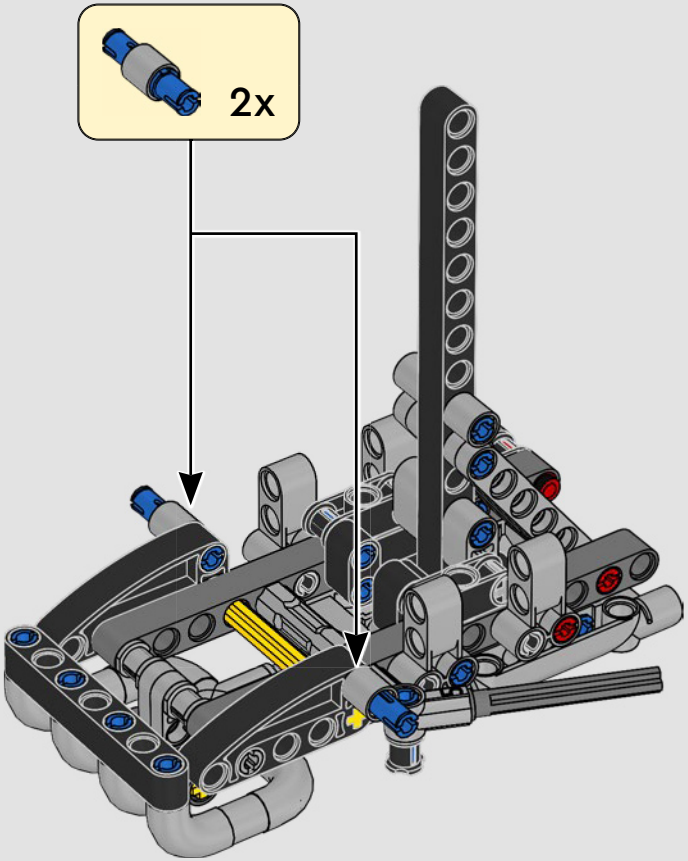

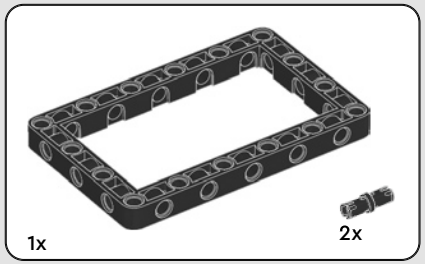

33

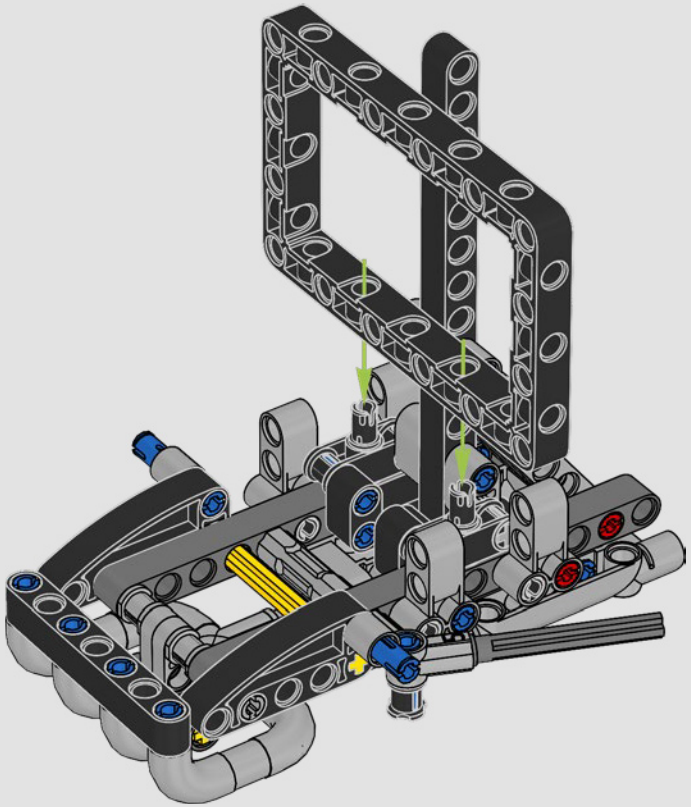

34

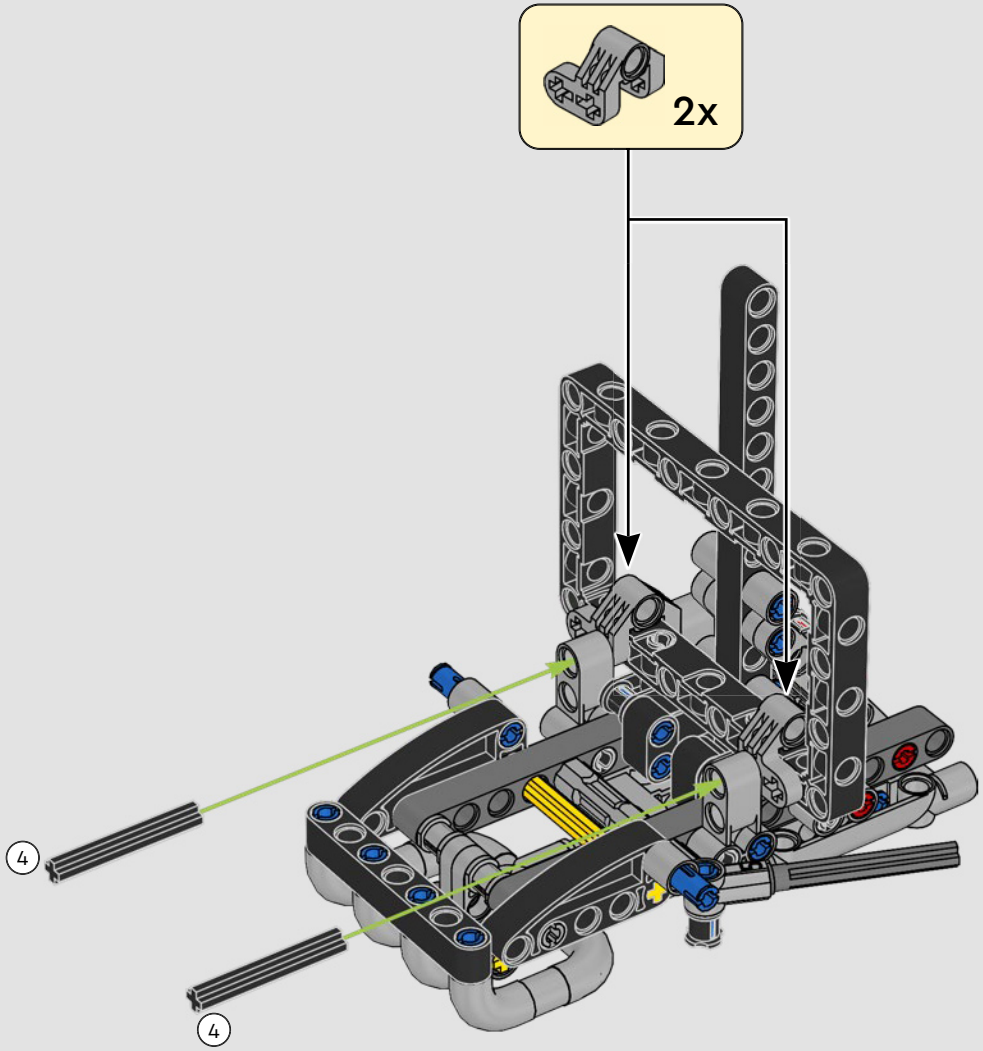

1:1

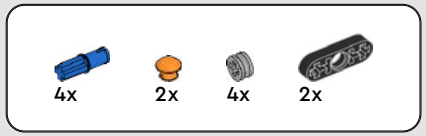

35

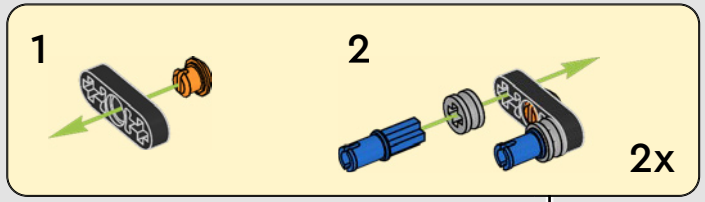

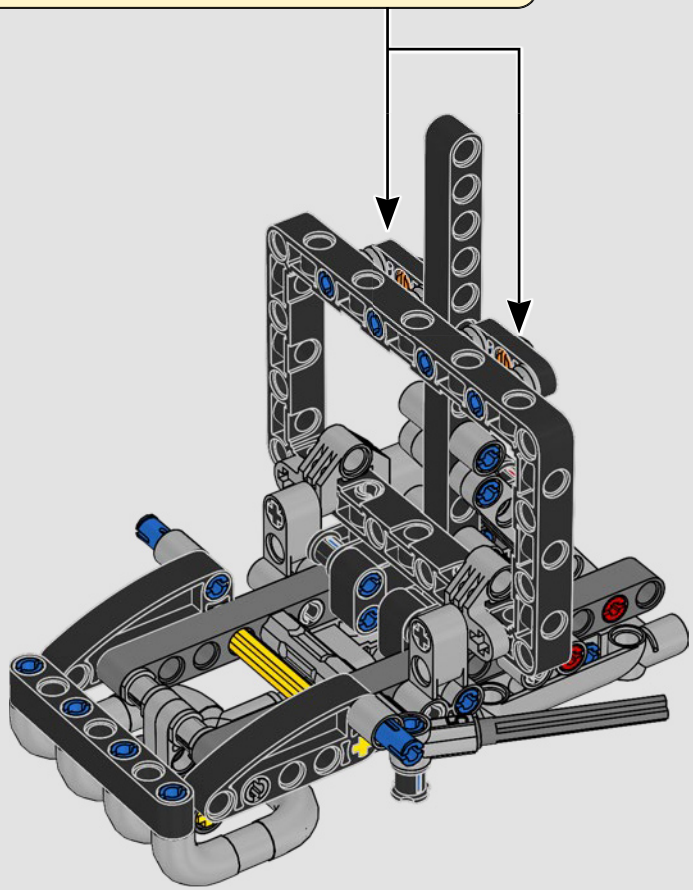

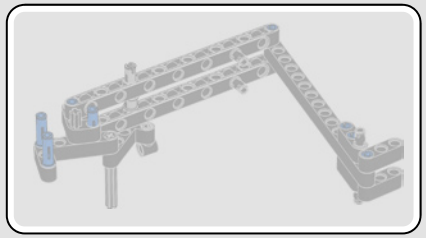

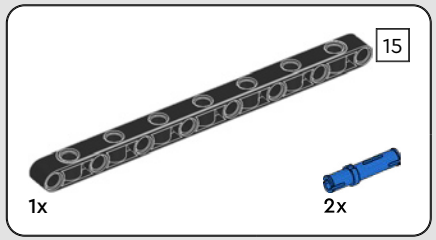

36

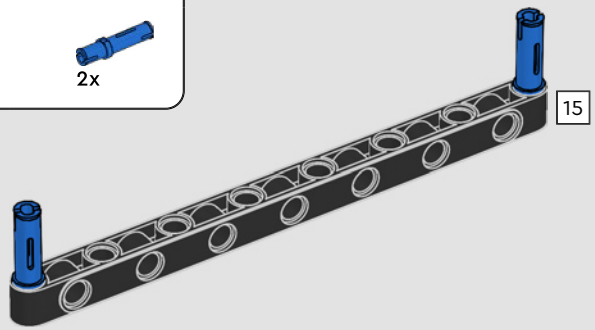

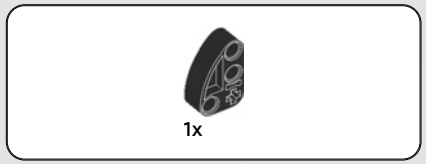

37

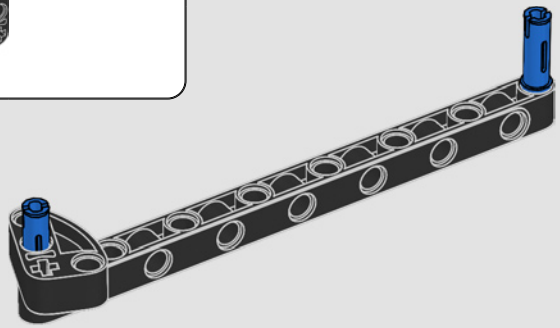

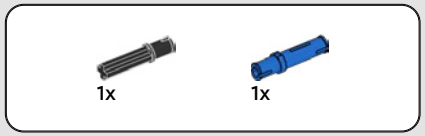

38

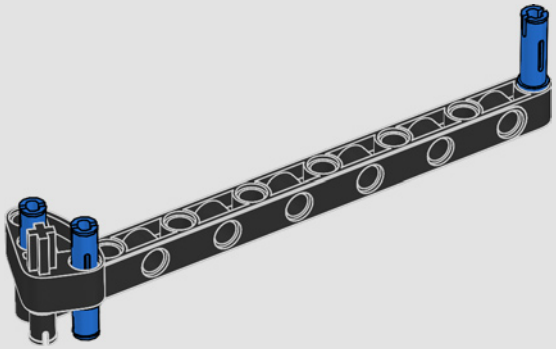

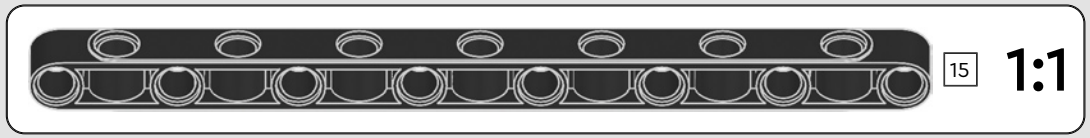

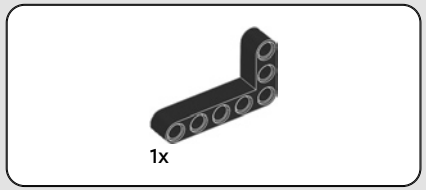

39

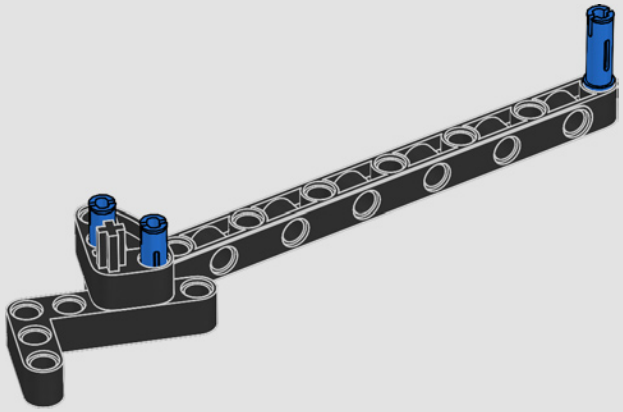

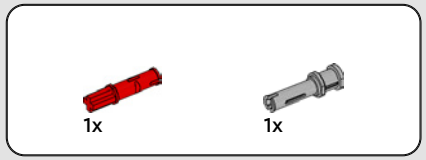

40

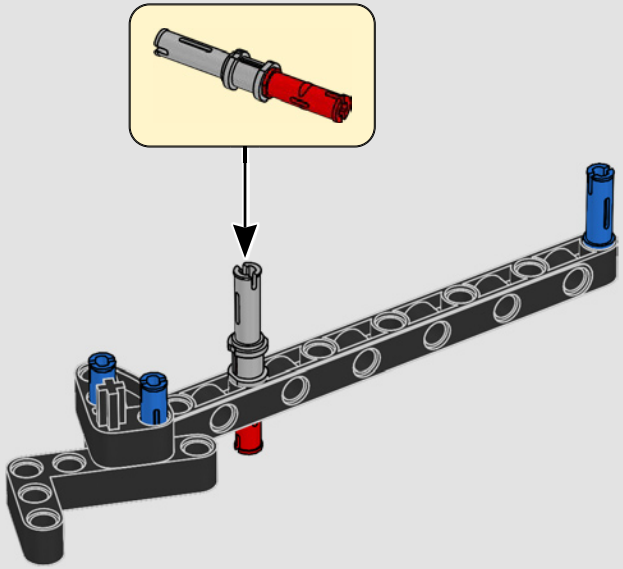

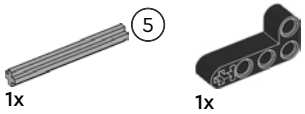

41

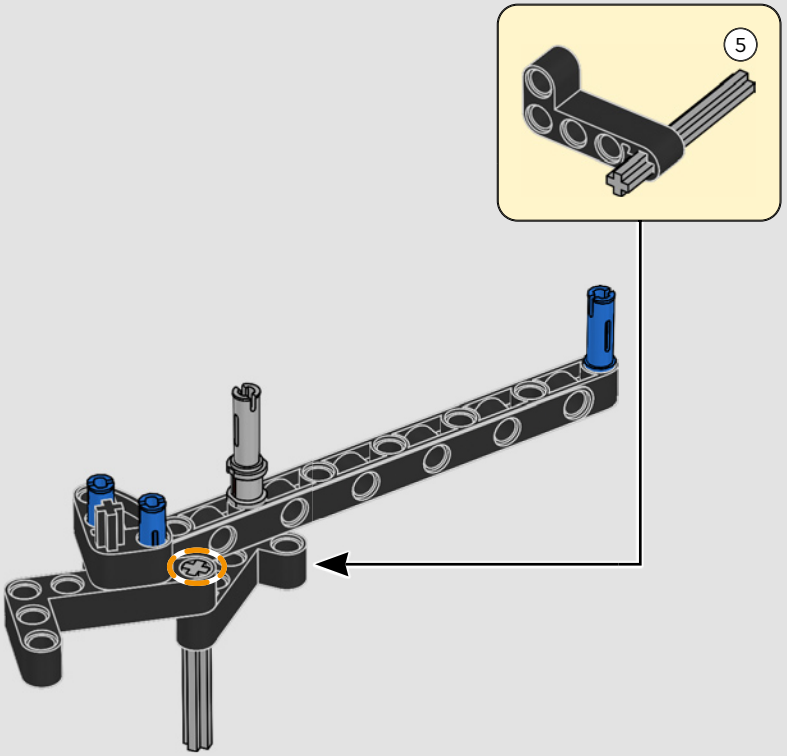

1:1

42

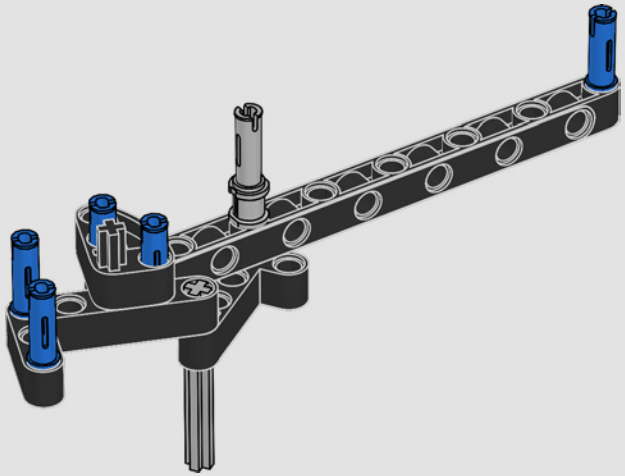

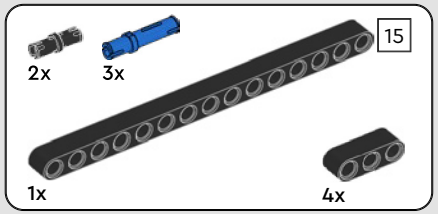

43

1

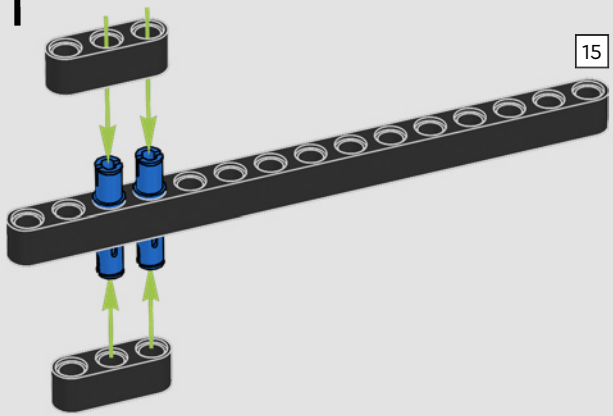

2

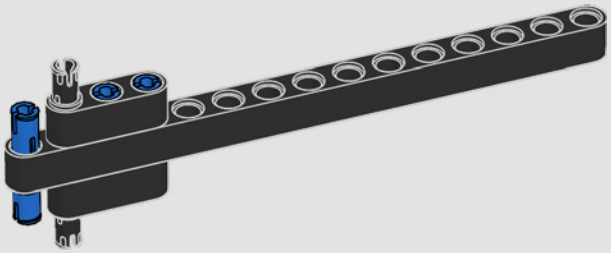

3

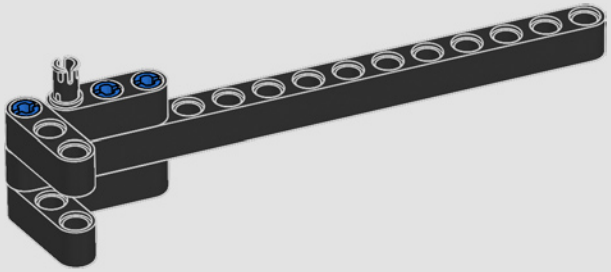

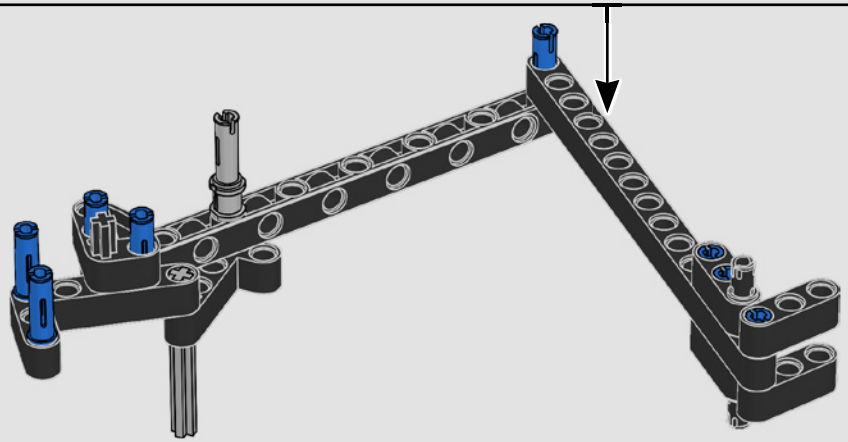

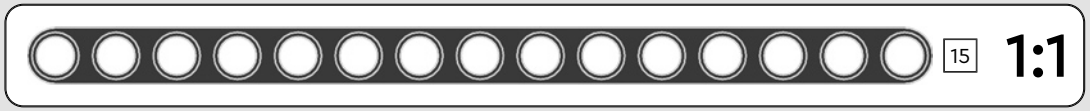

44

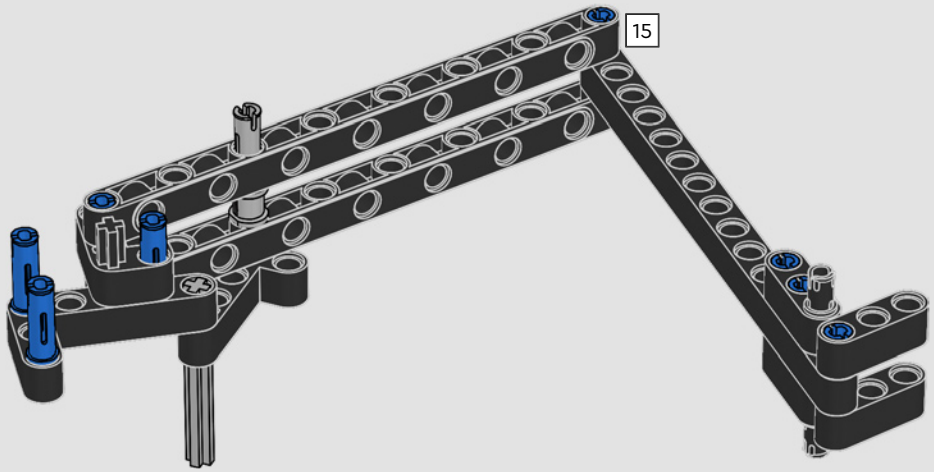

45

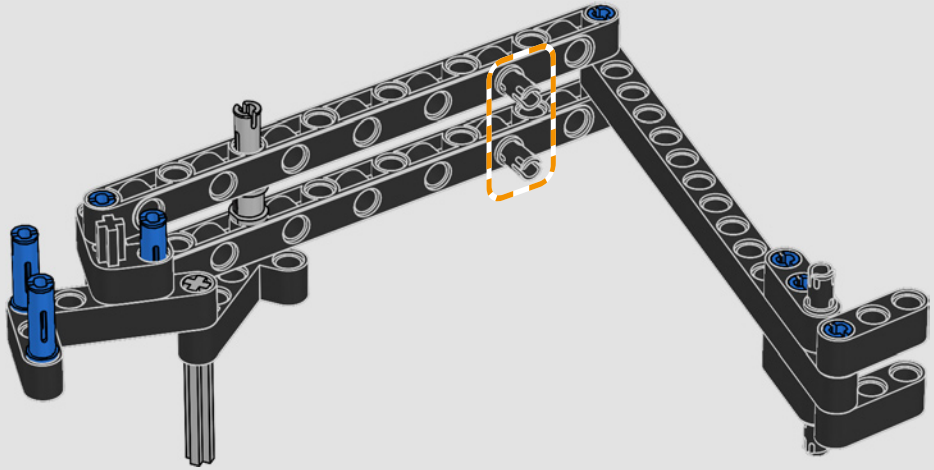

1:1

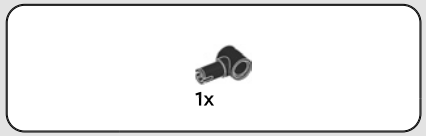

46

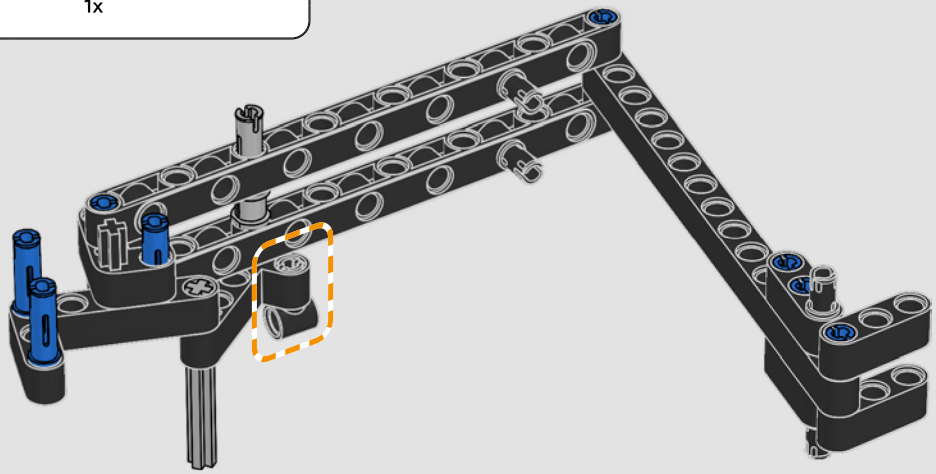

47

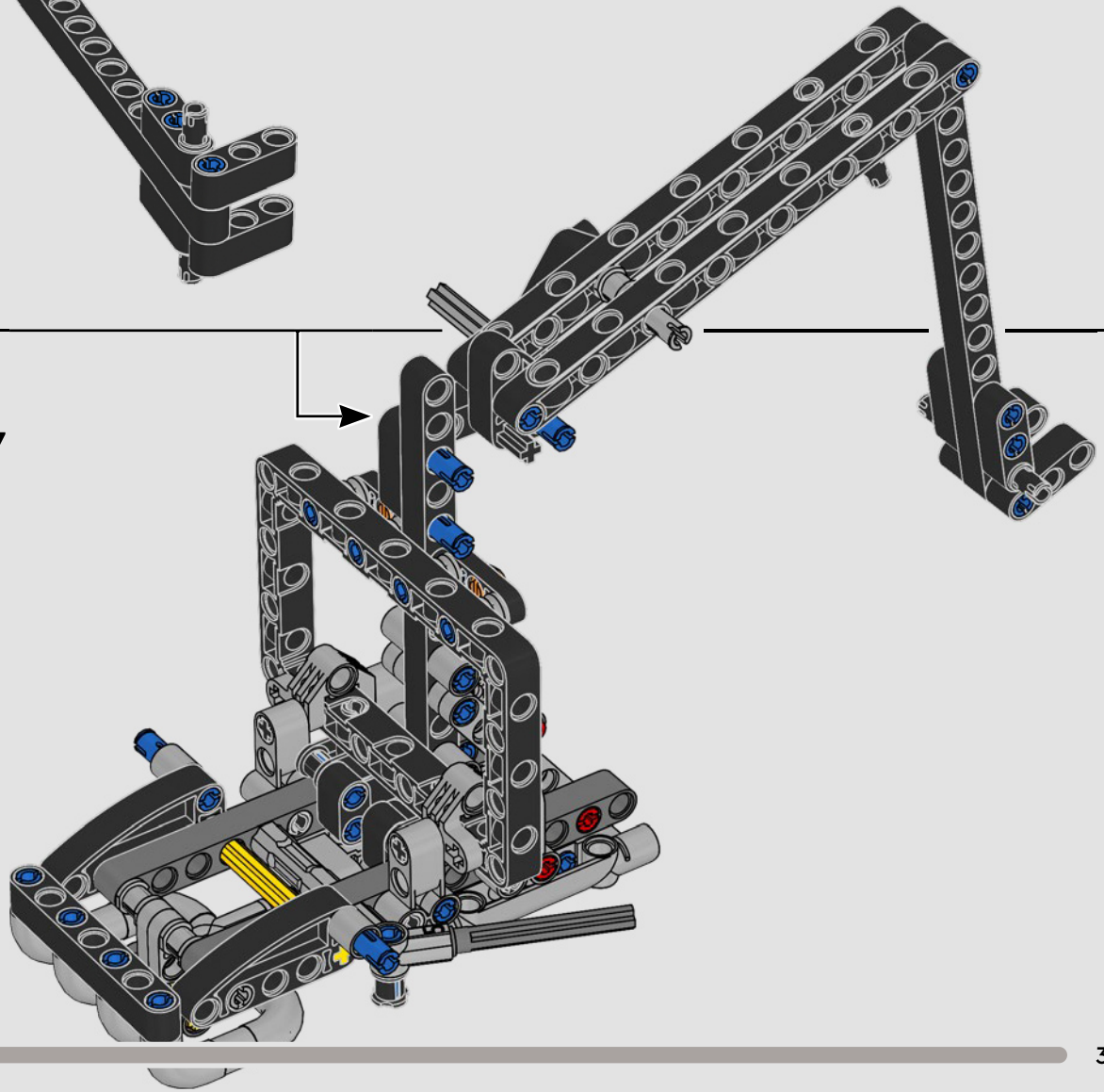

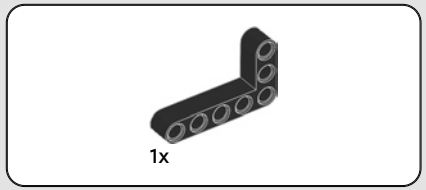

48

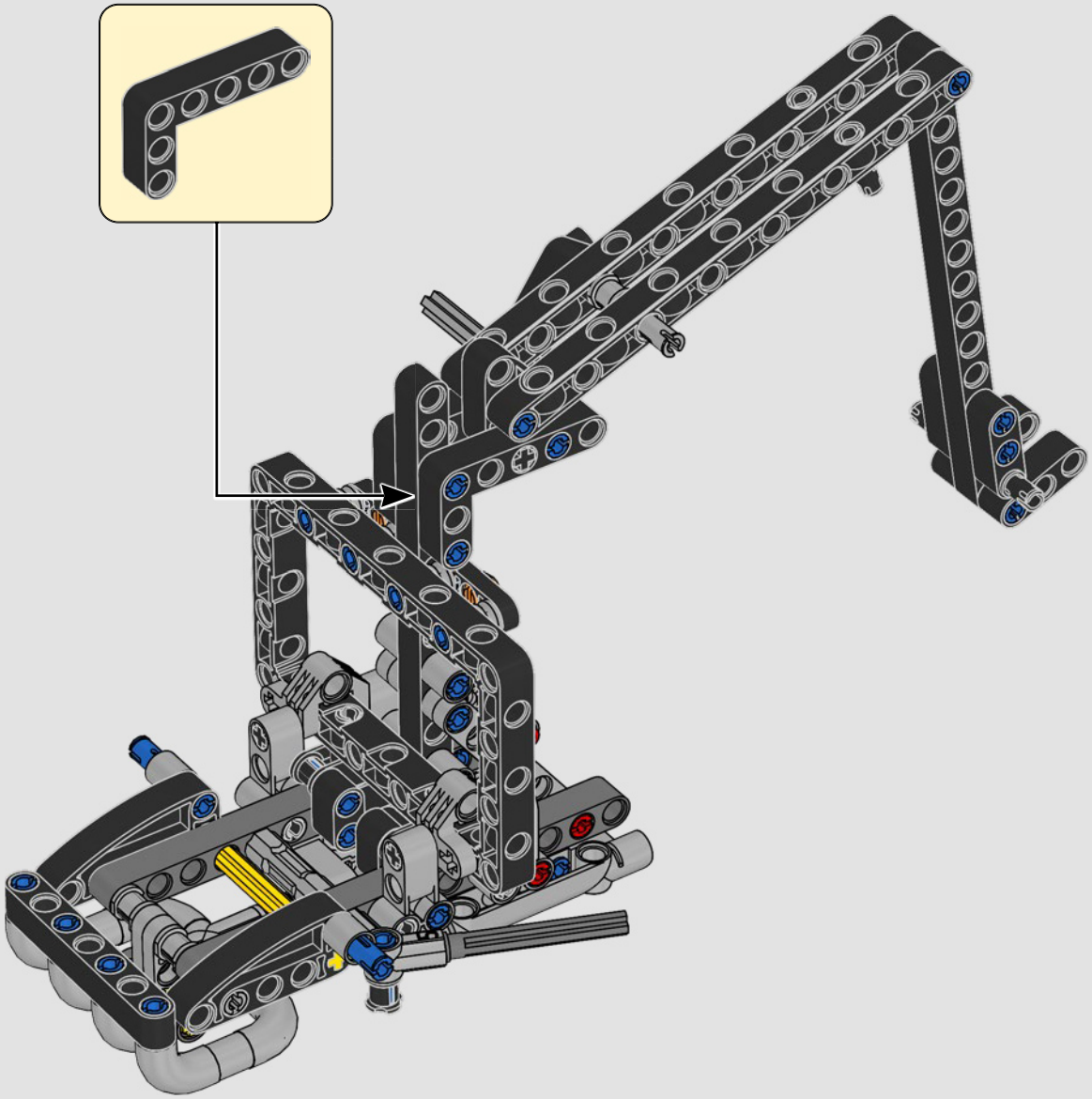

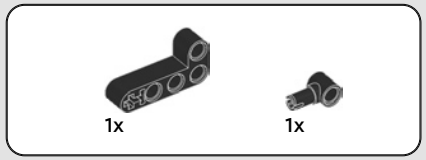

49

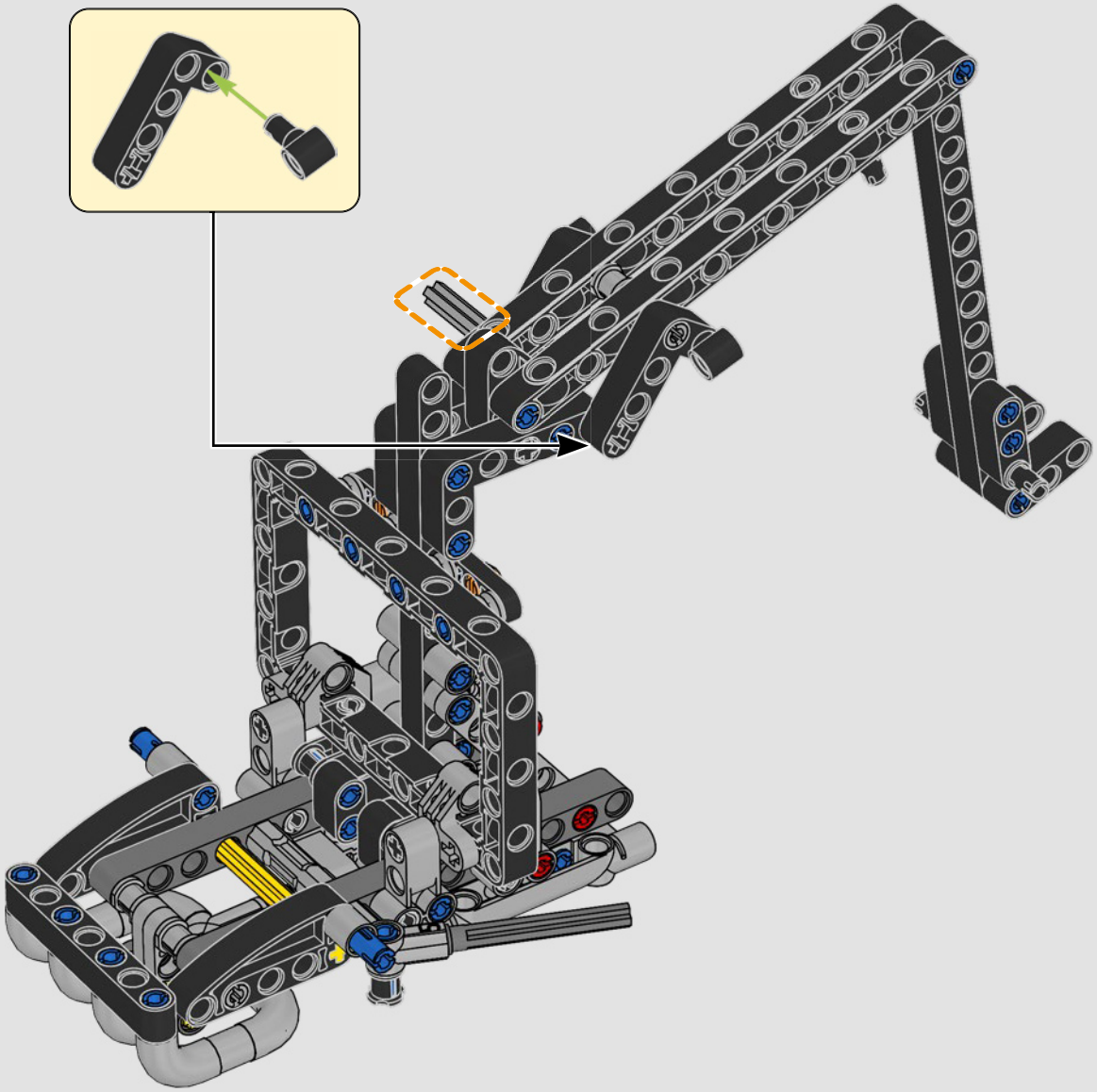

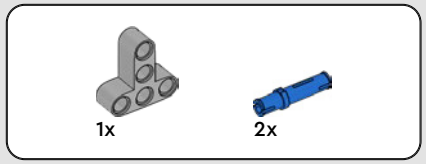

50

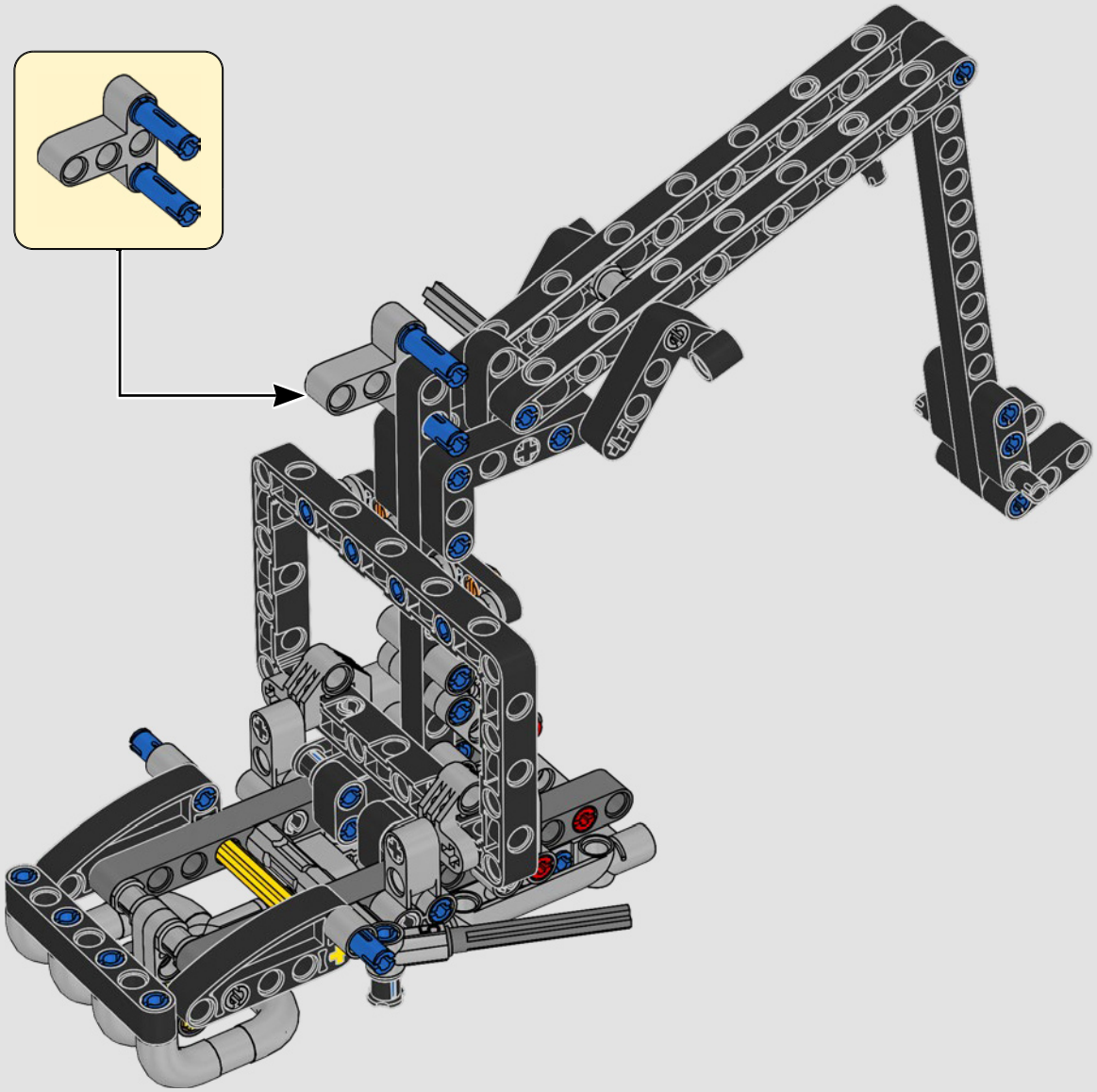

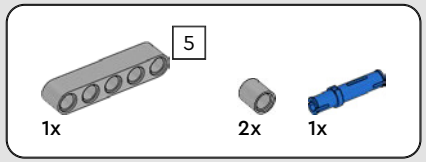

51

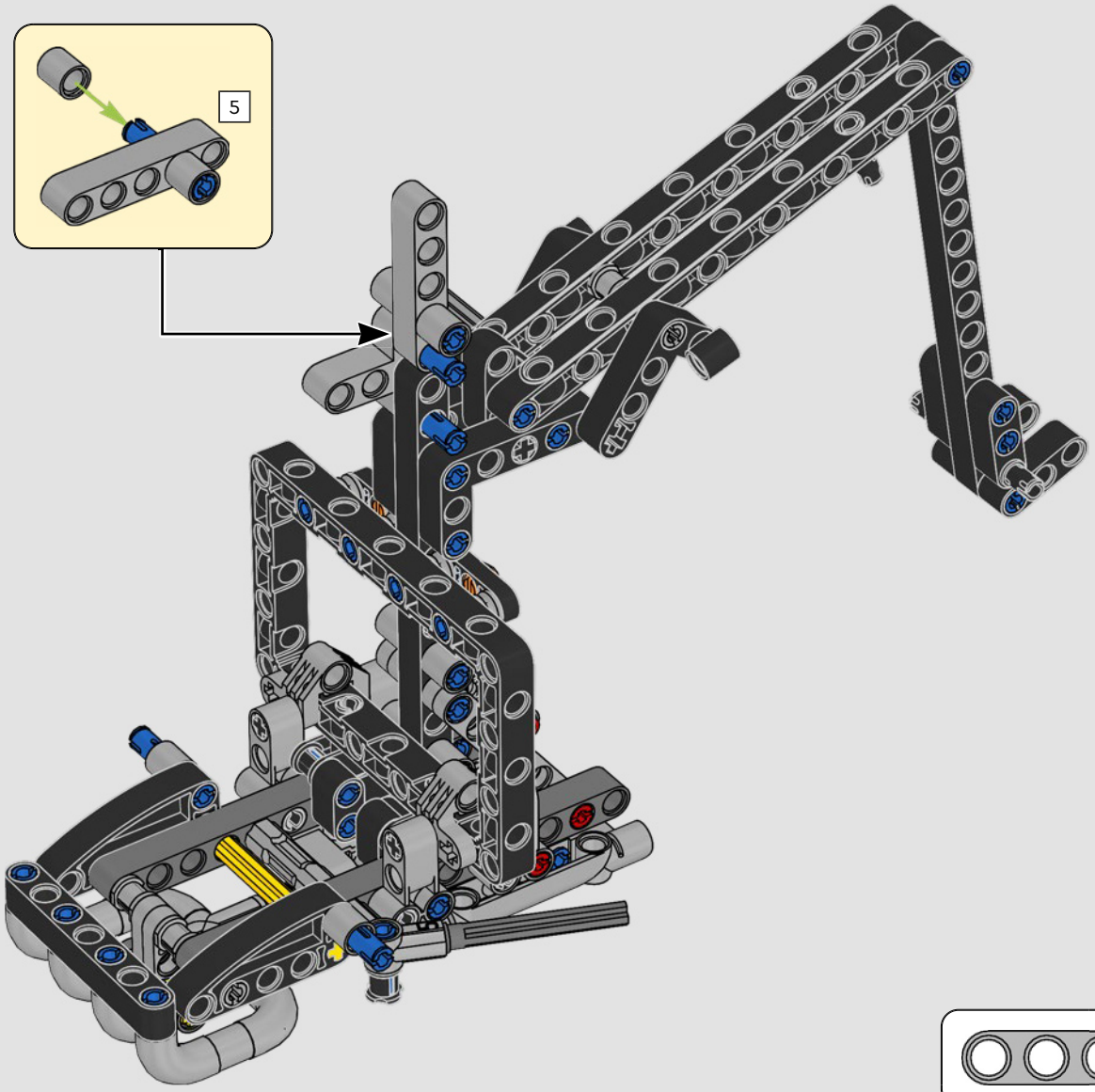

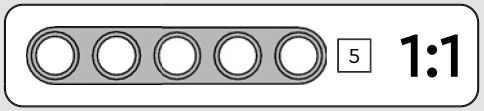

1x

52

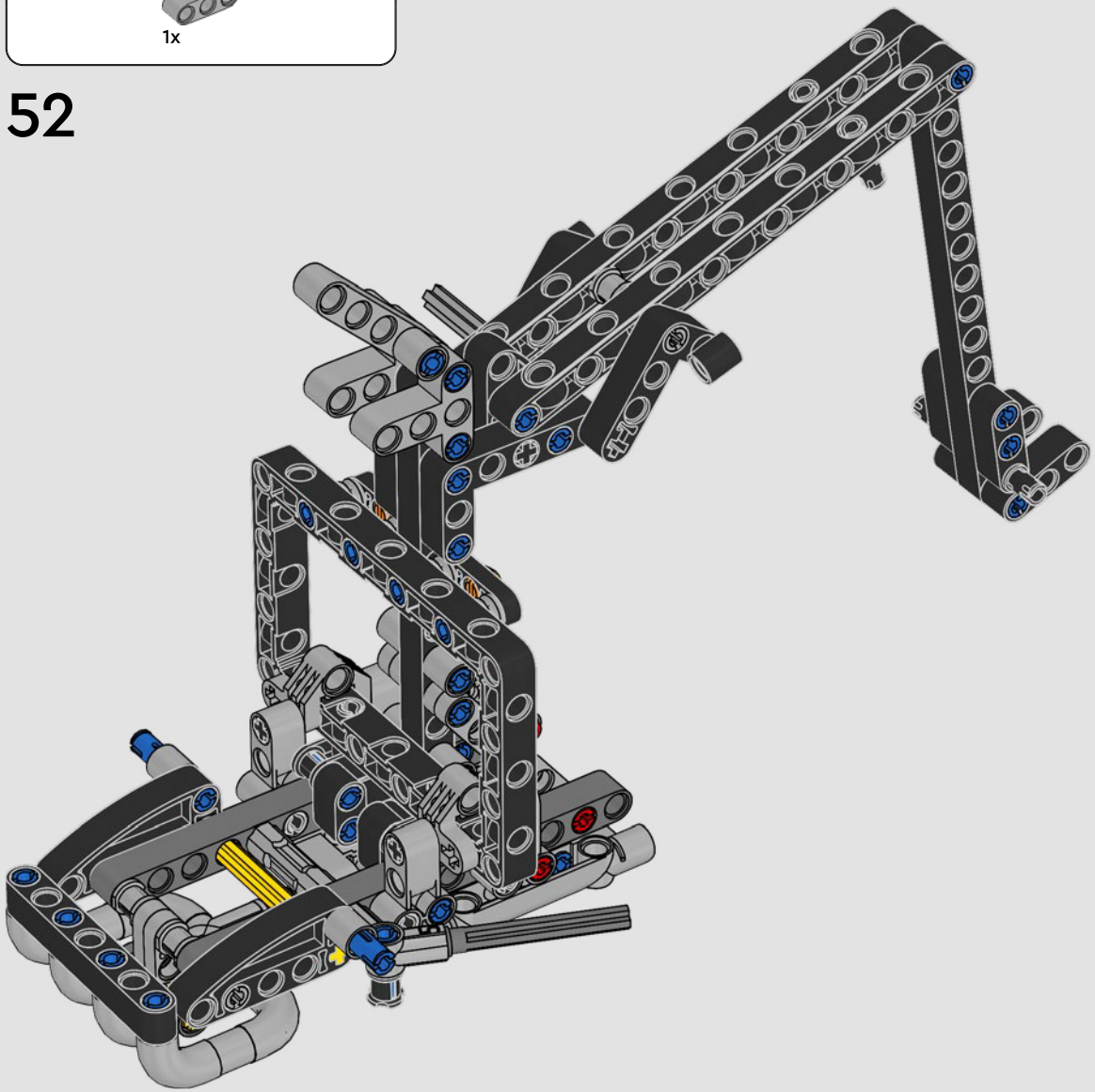

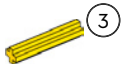

1x

1x

53

1x

1x

54

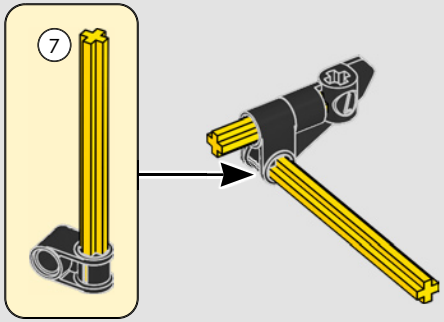

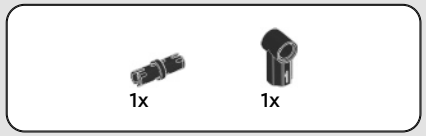

55

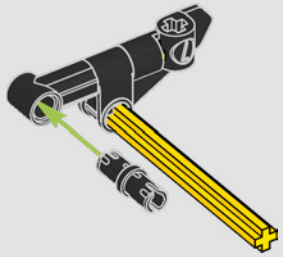

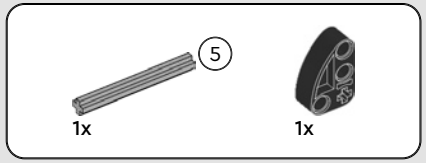

56

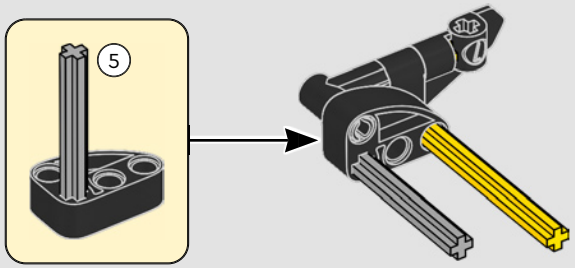

57

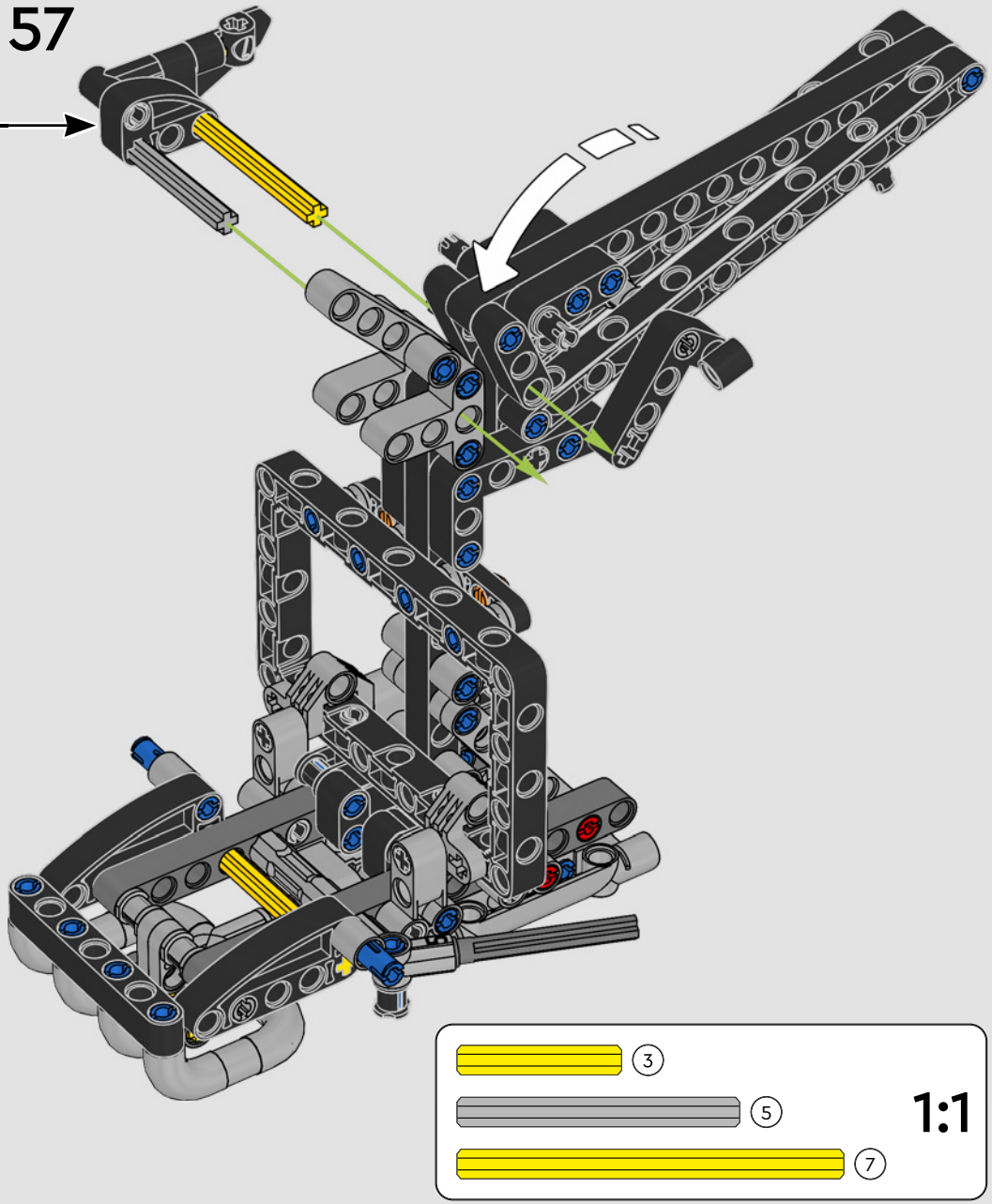

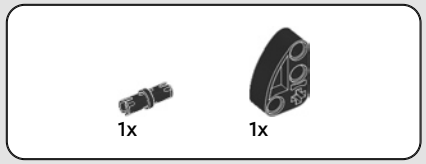

58

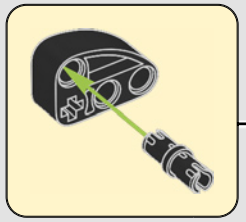

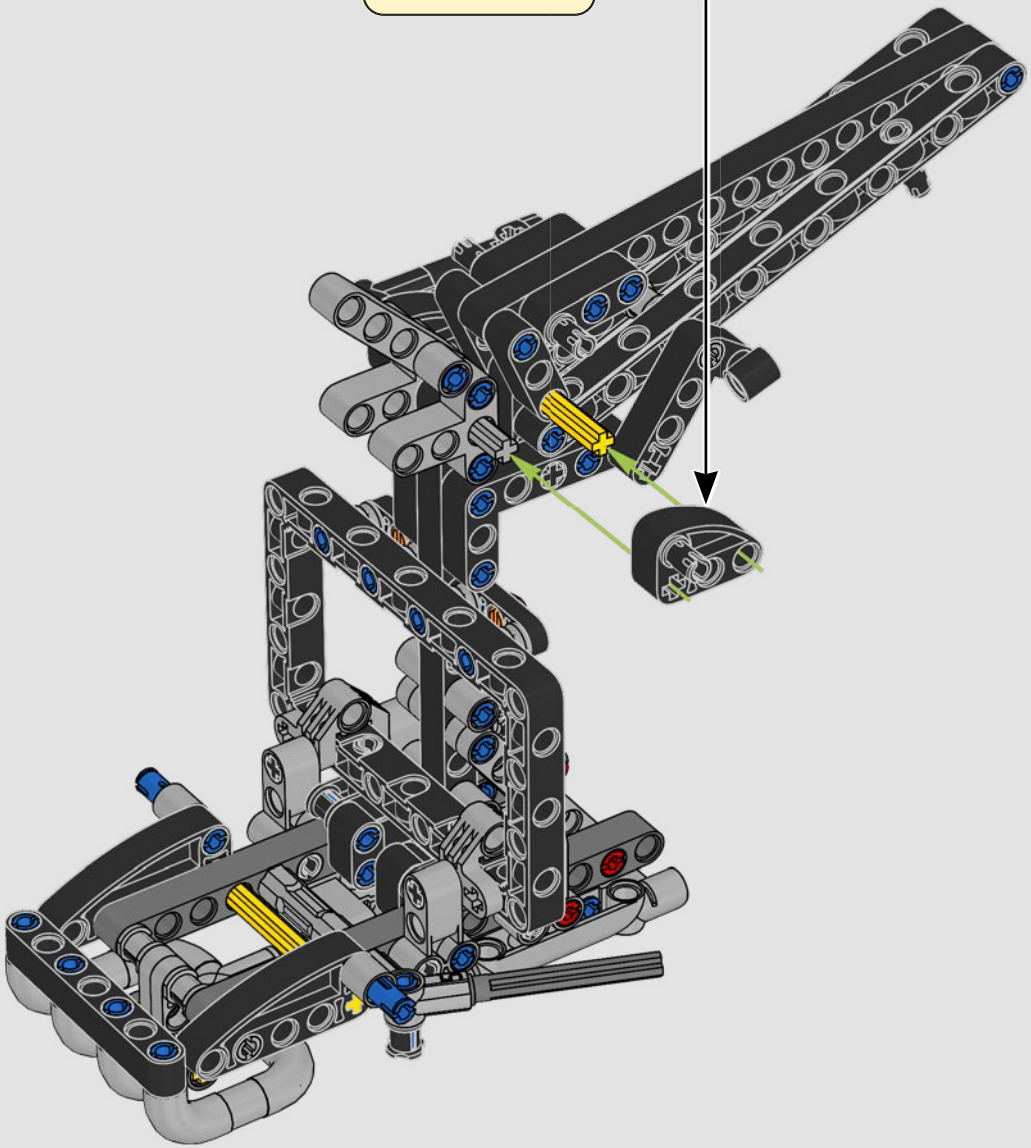

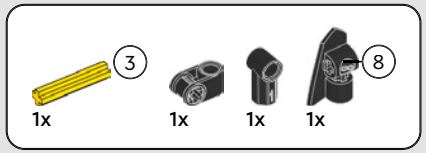

59

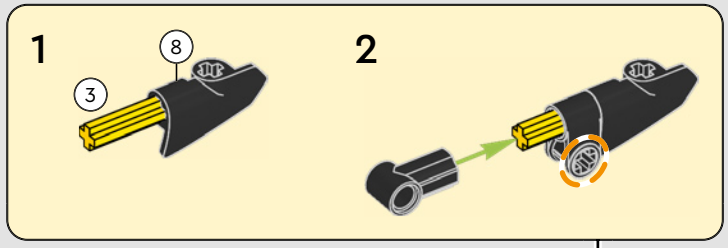

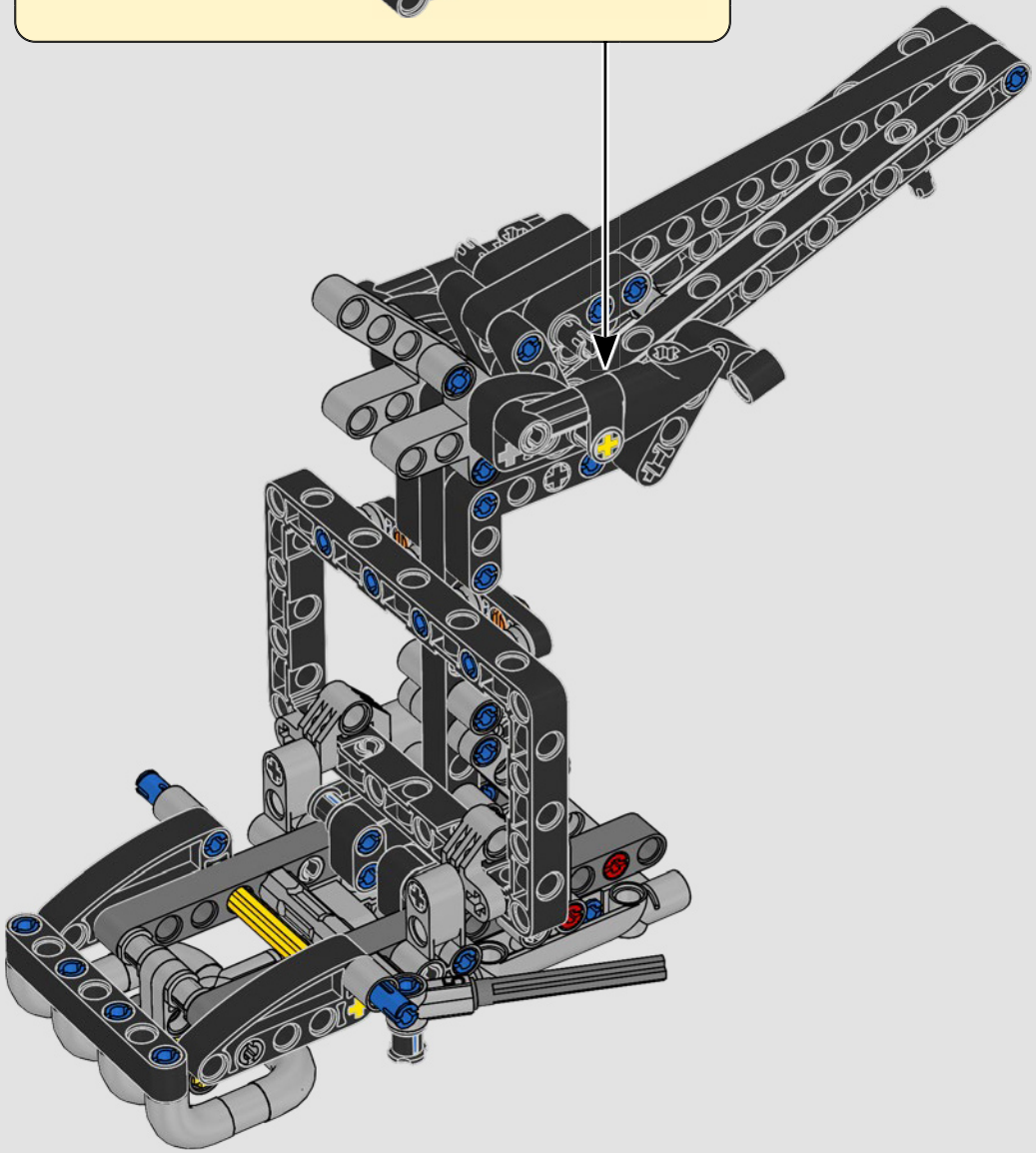

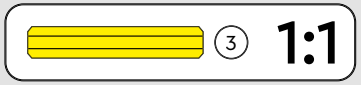

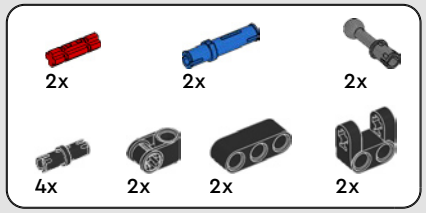

60

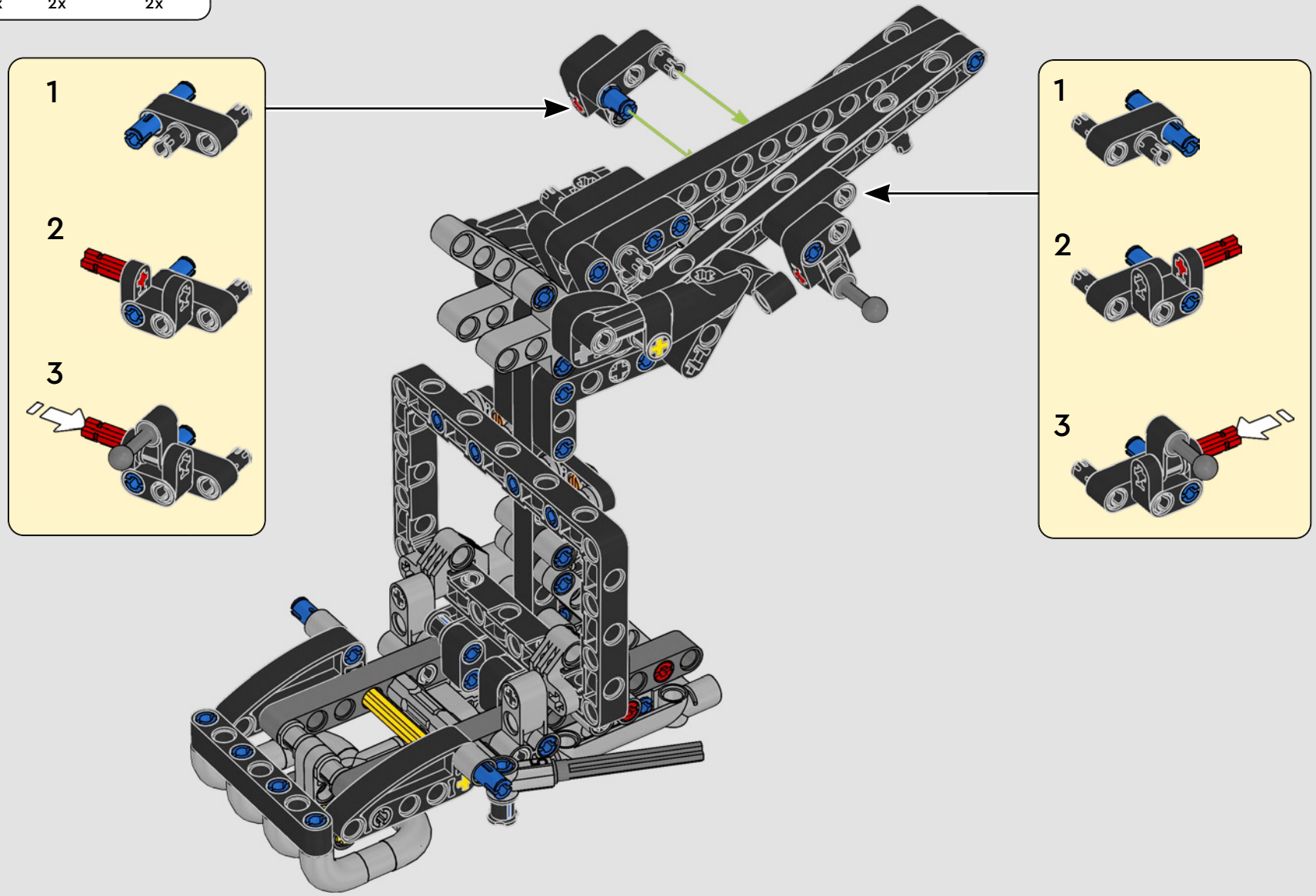

4x

61

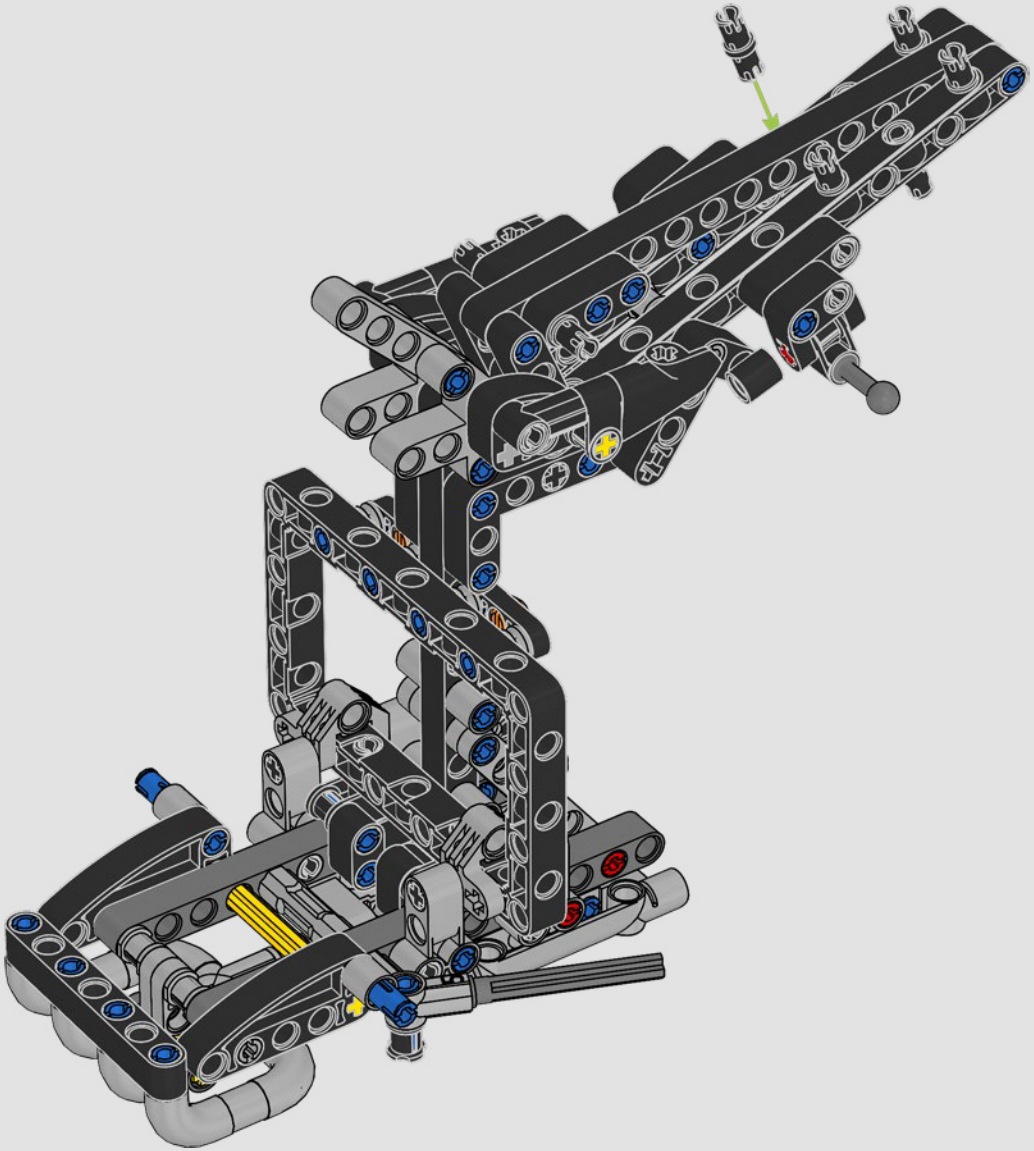

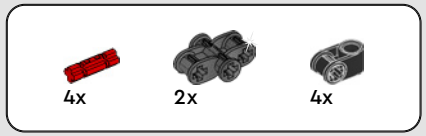

62

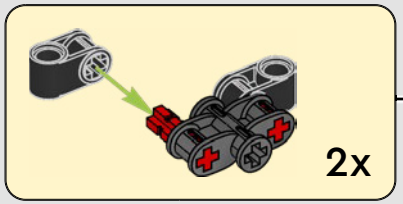

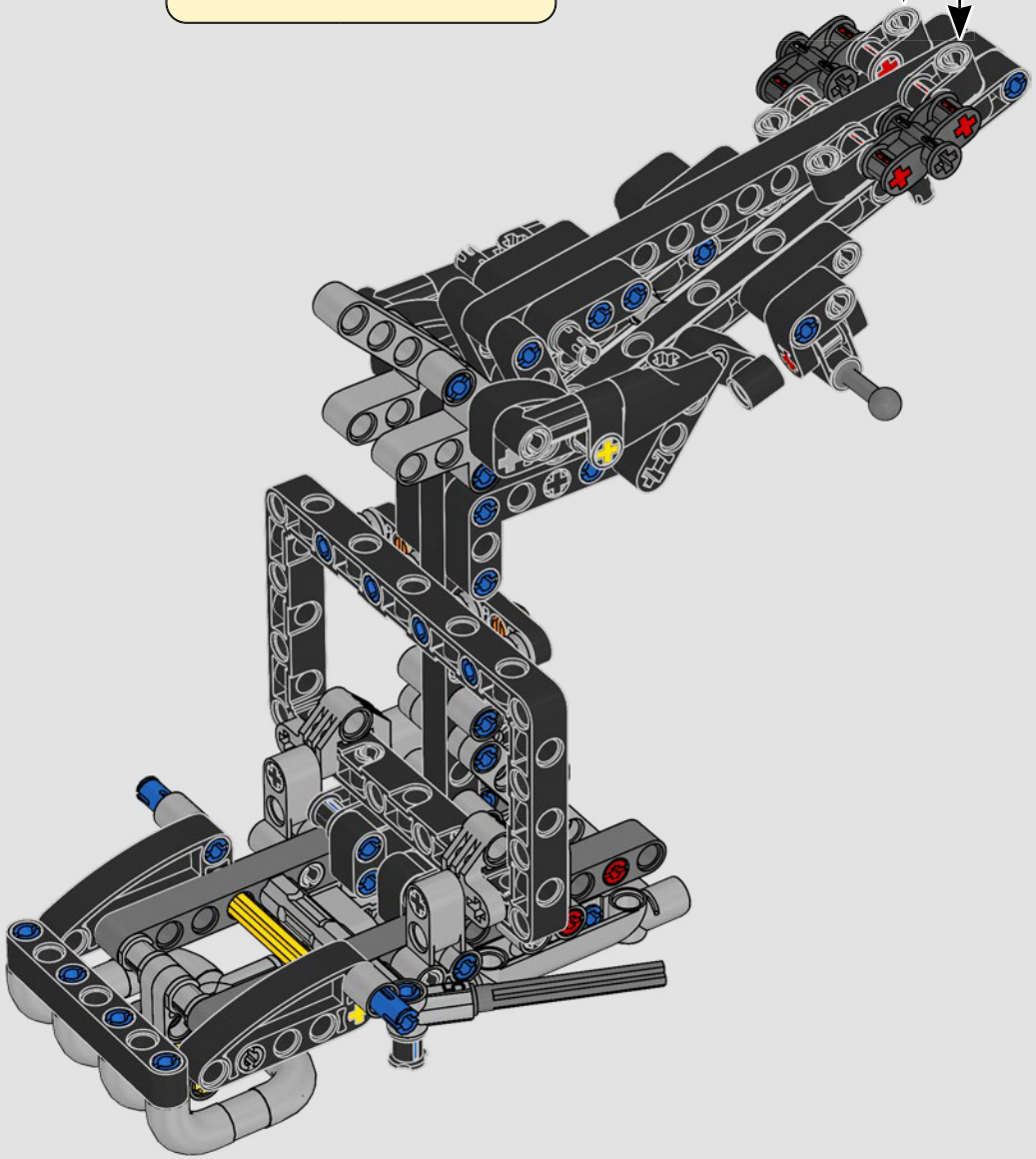

2x

63

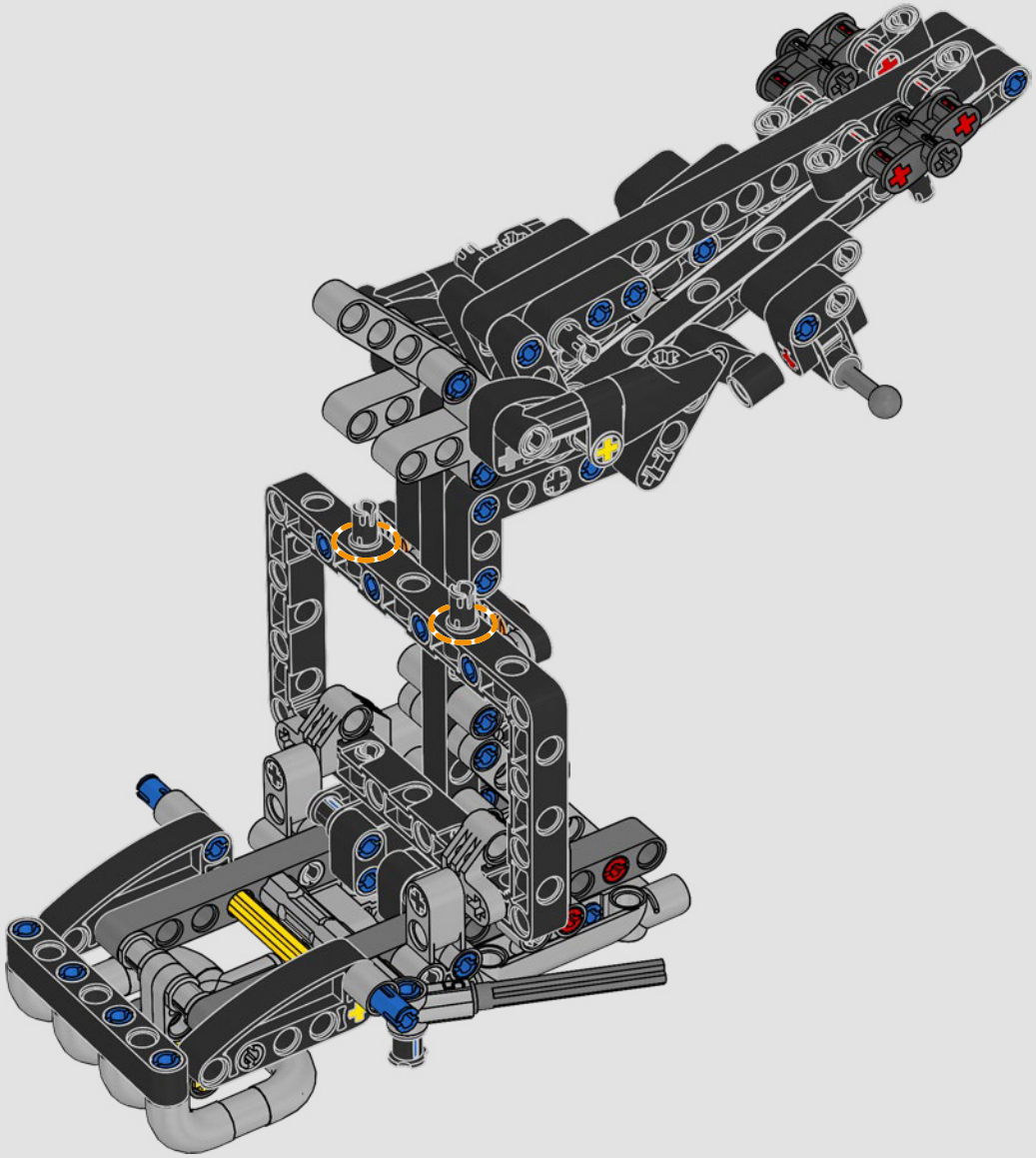

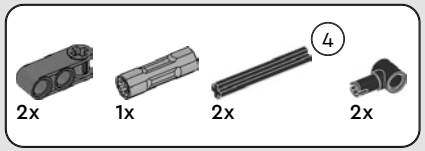

64

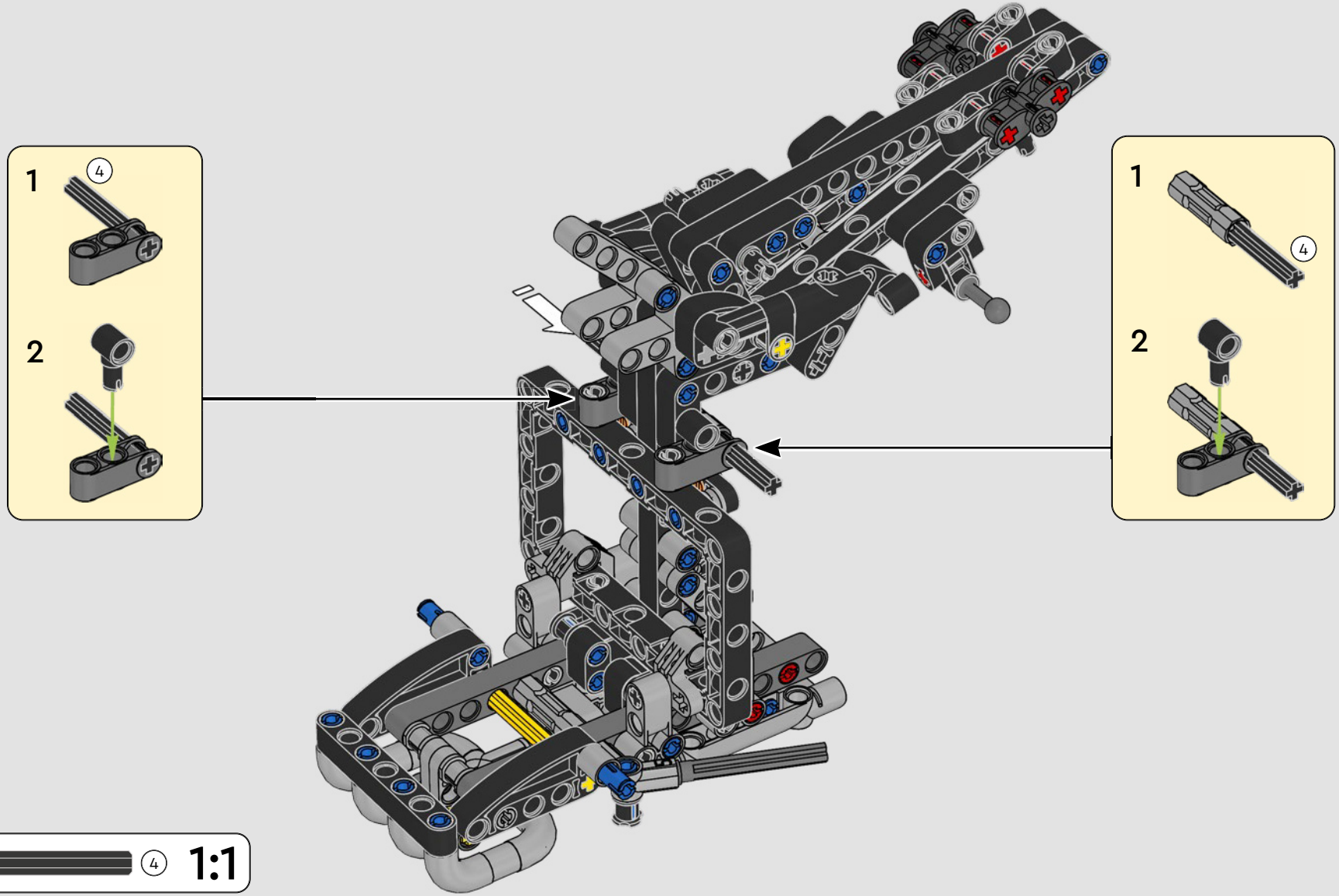

65

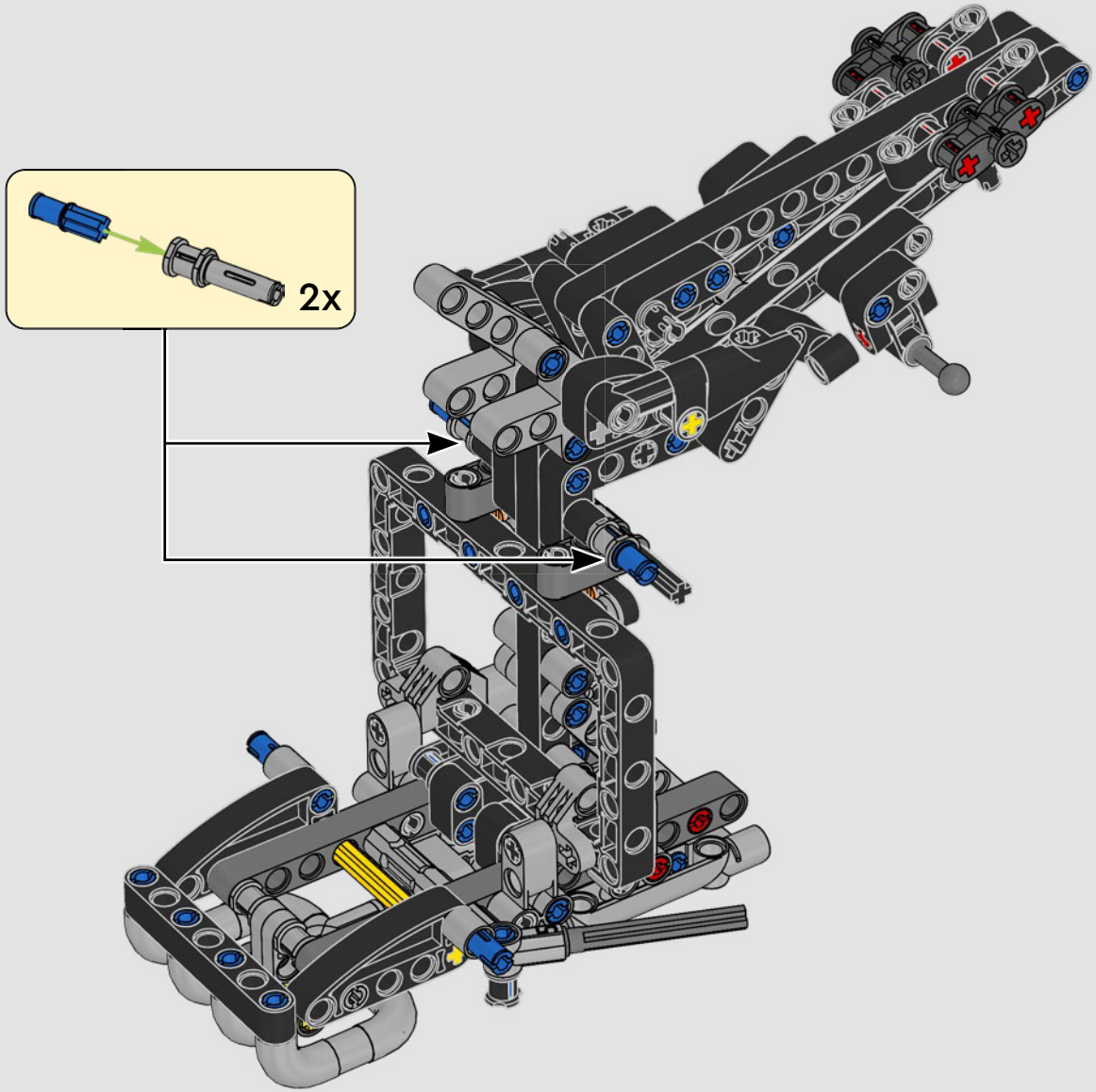

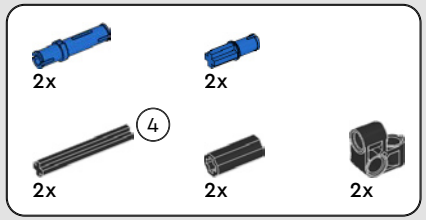

66

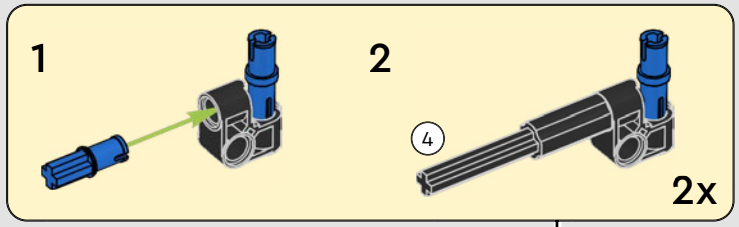

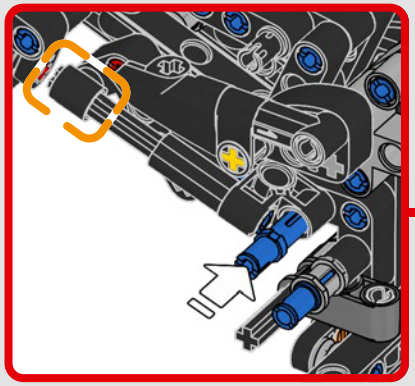

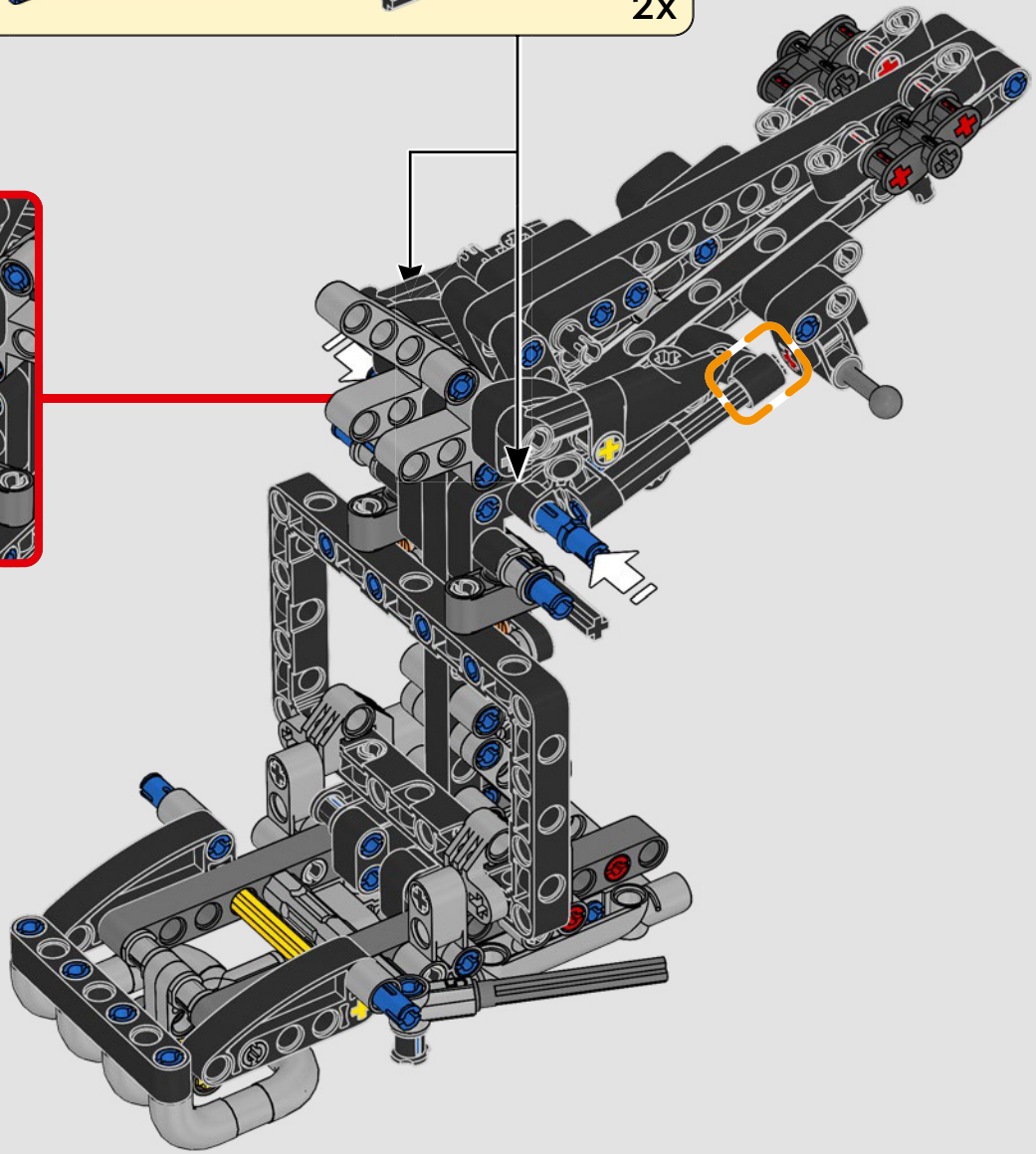

67

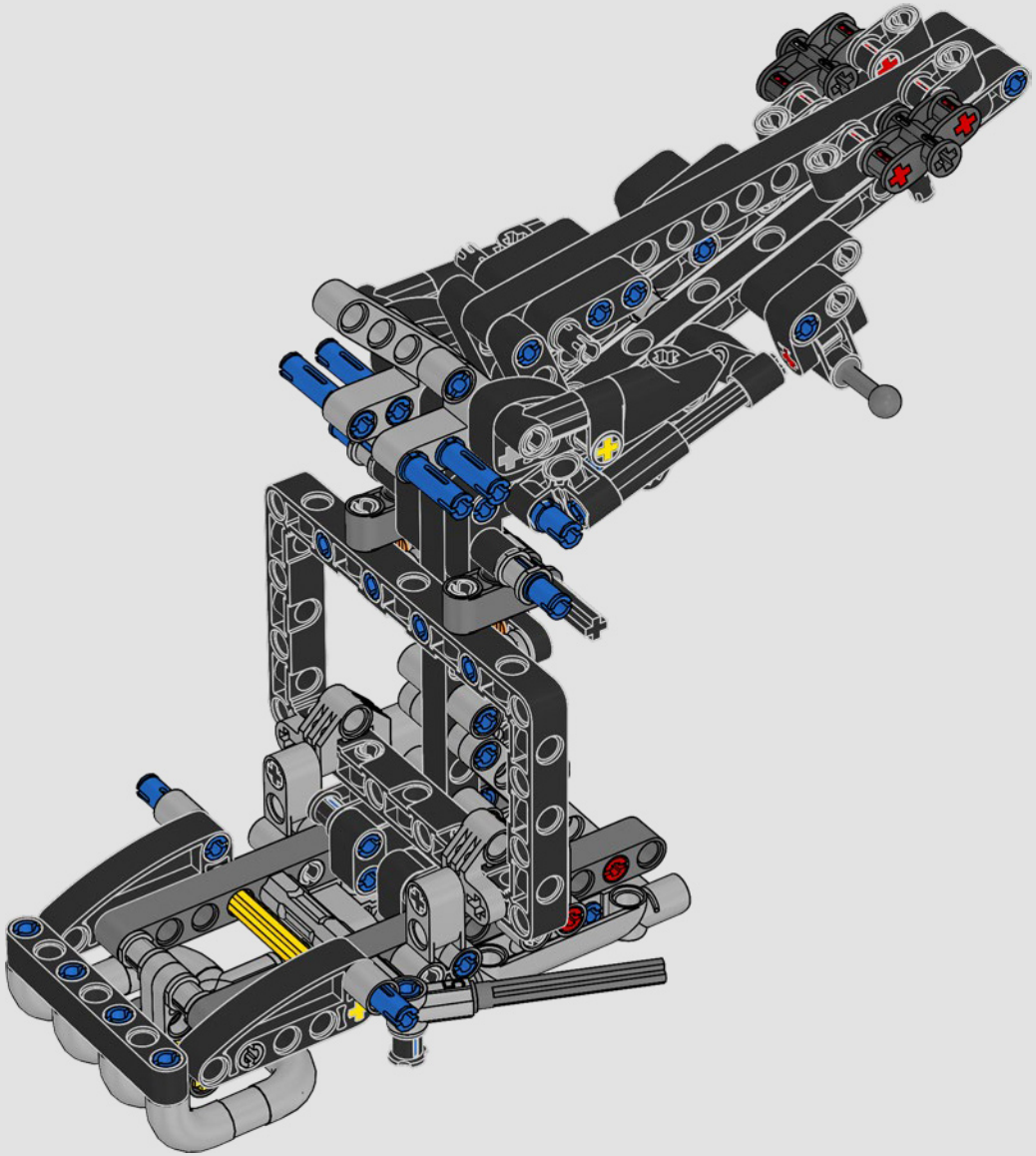

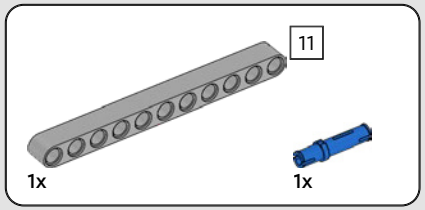

68

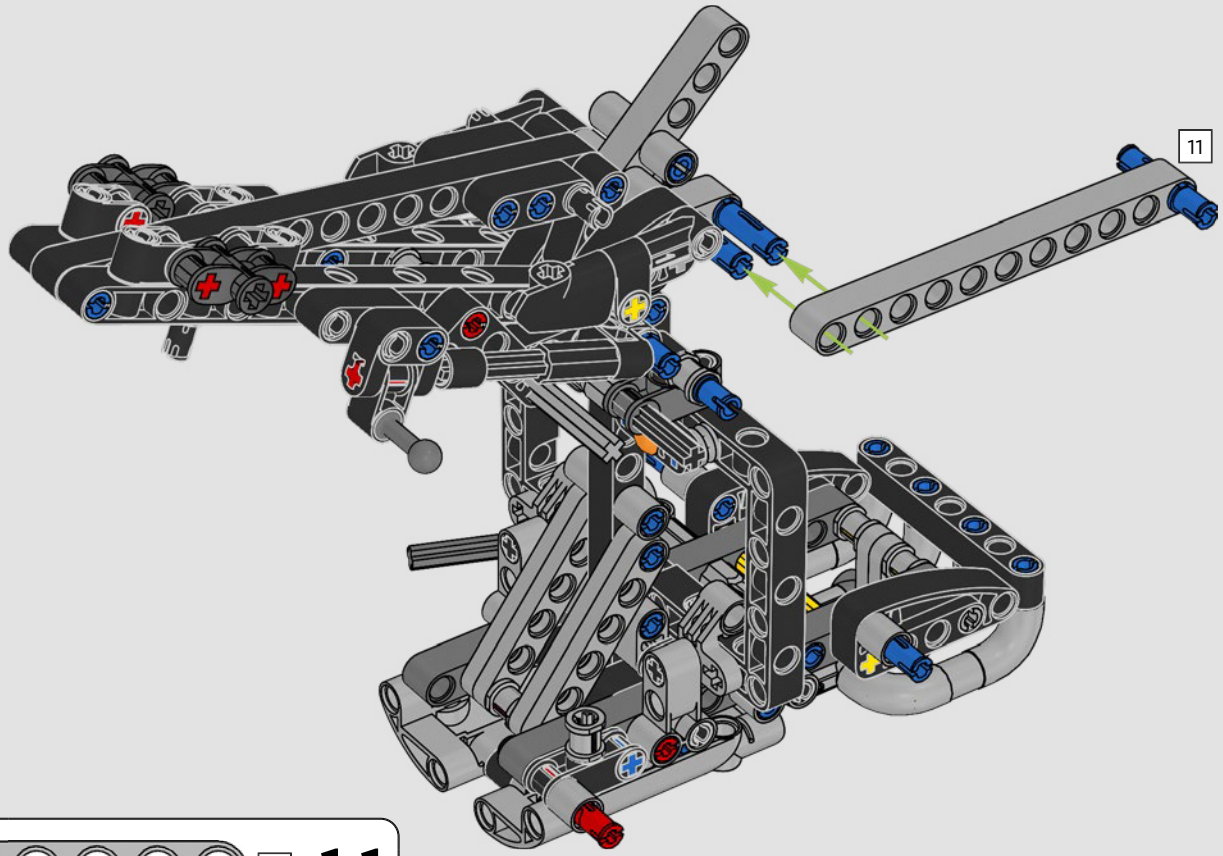

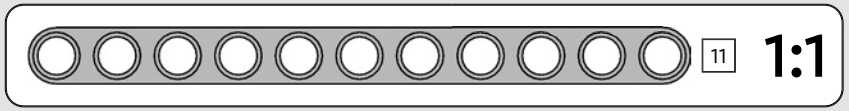

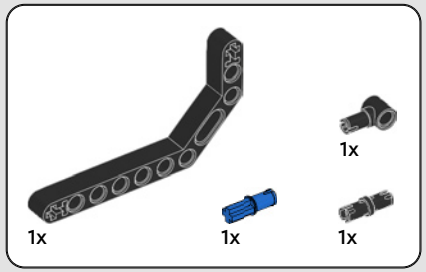

69

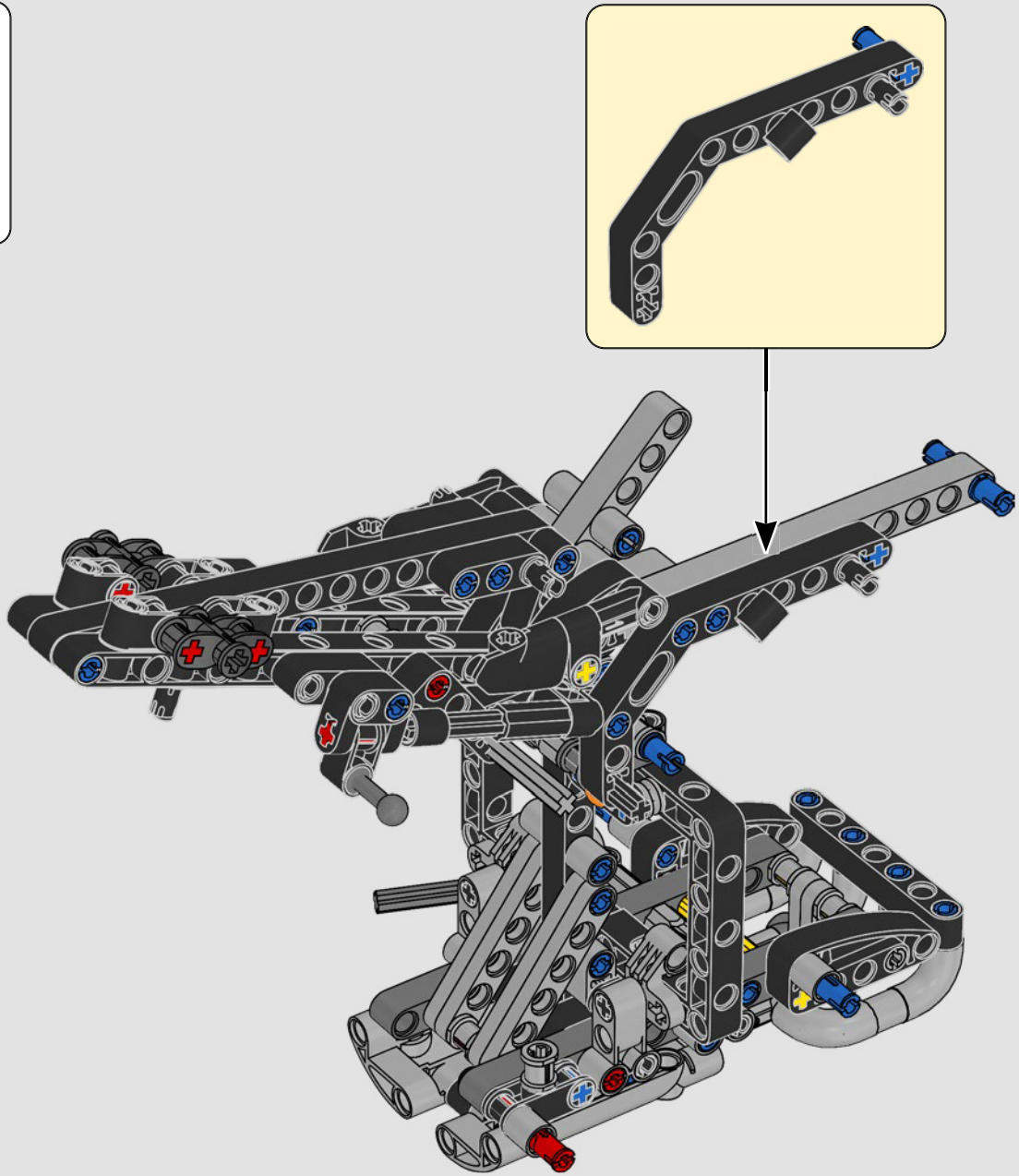

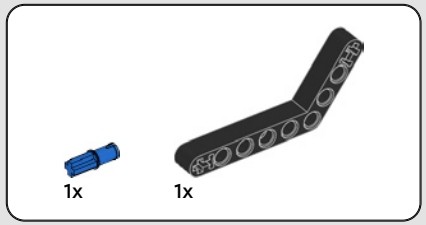

70

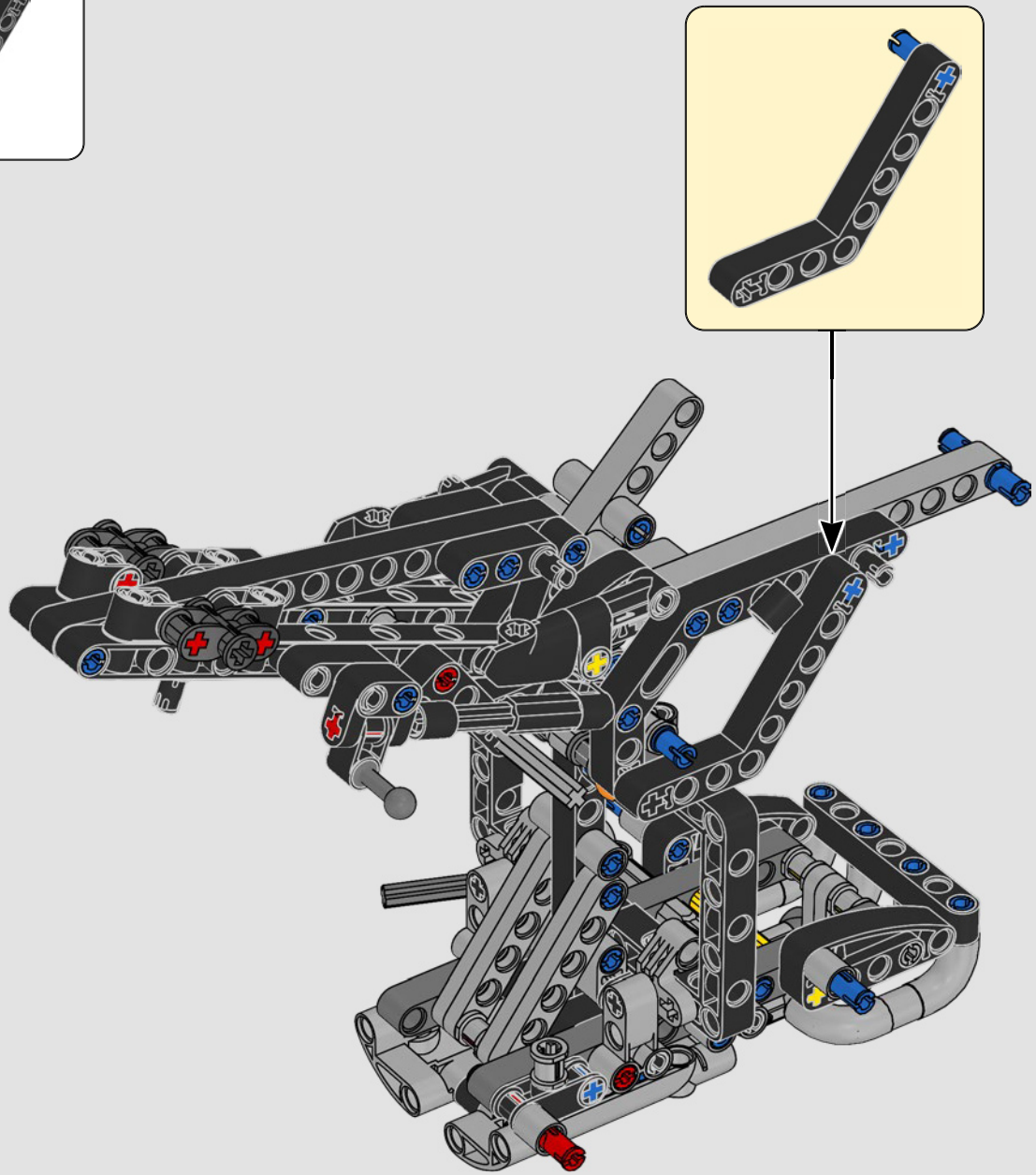

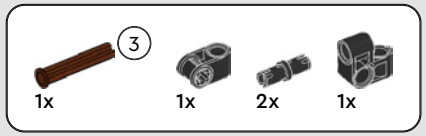

71

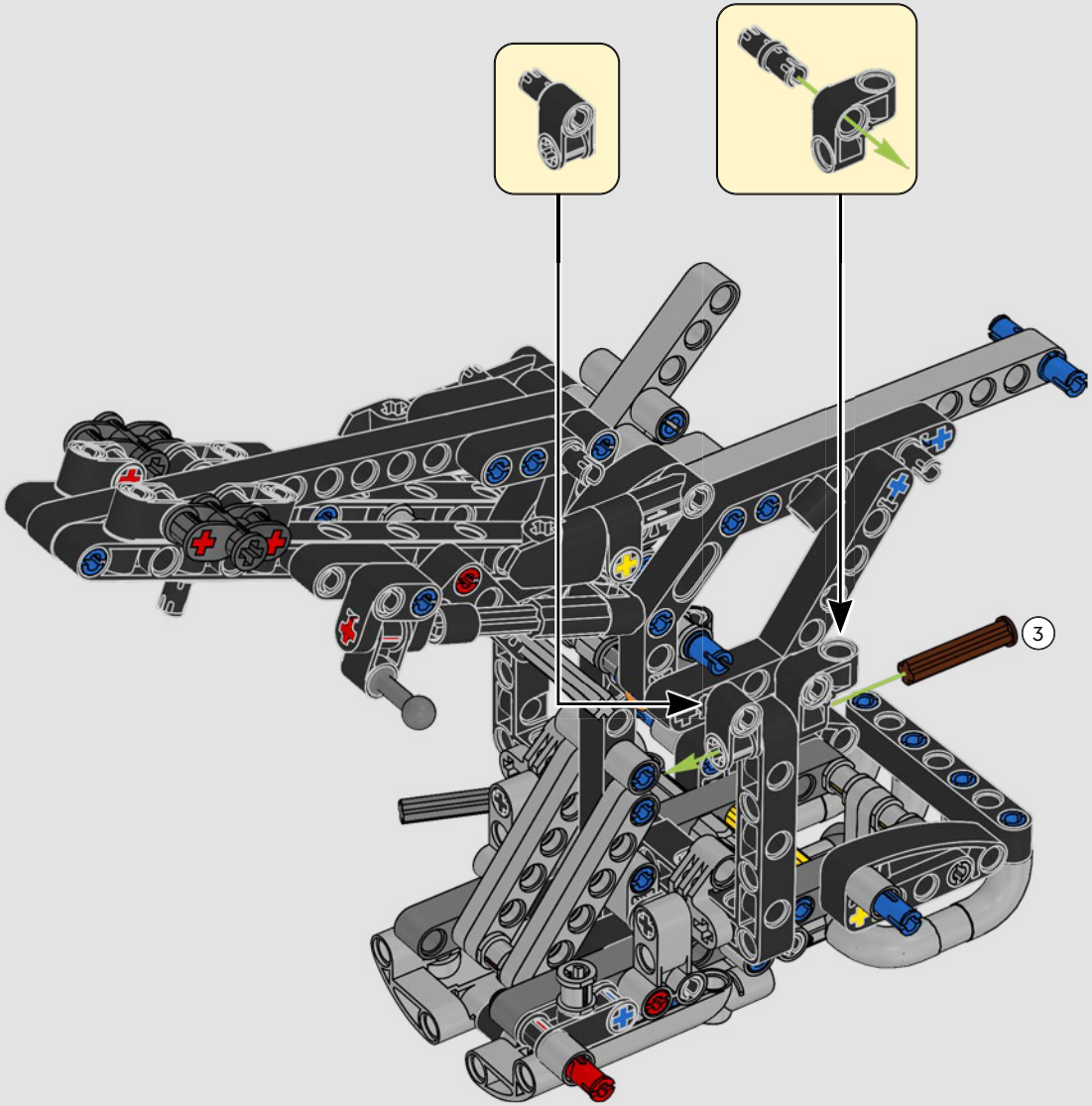

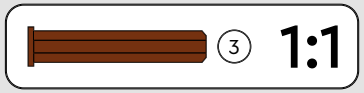

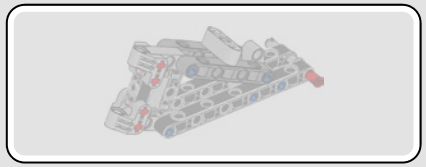

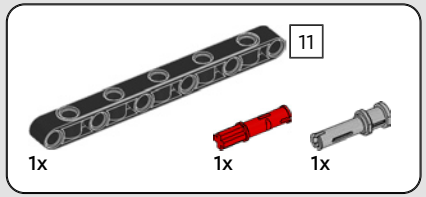

72

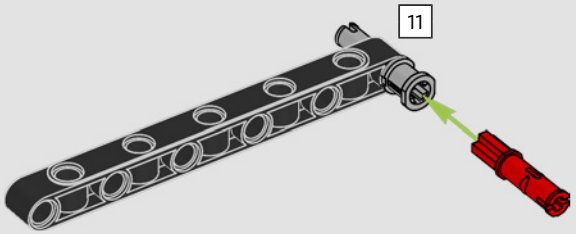

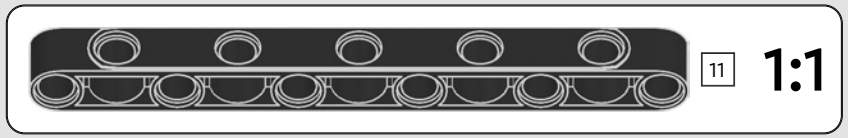

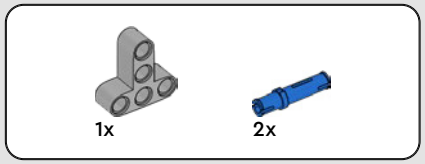

73

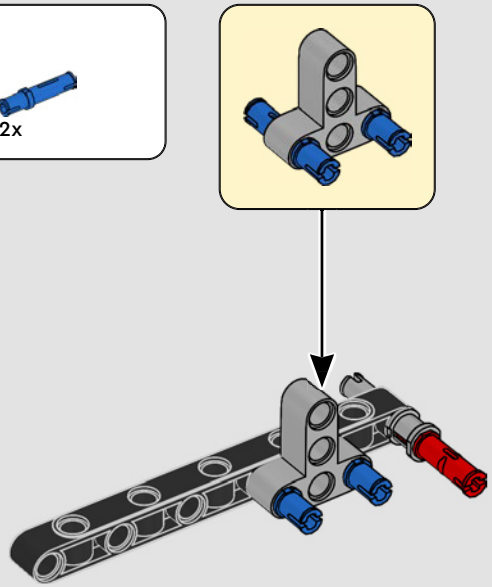

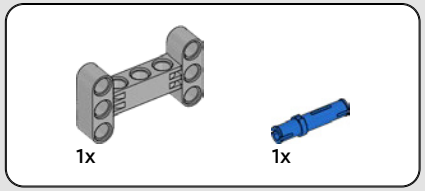

74

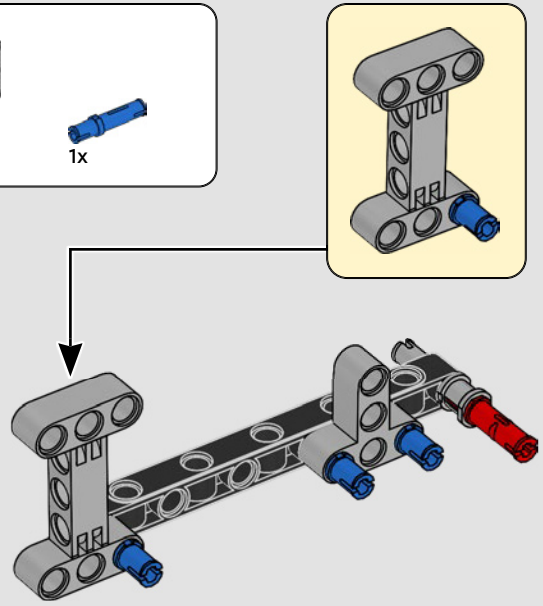

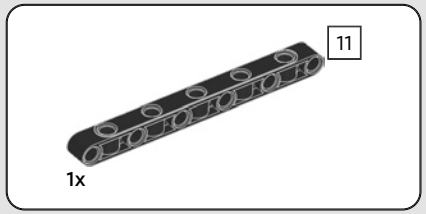

75

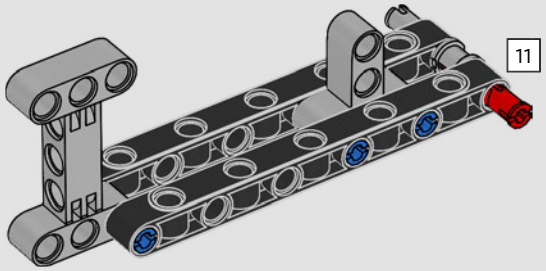

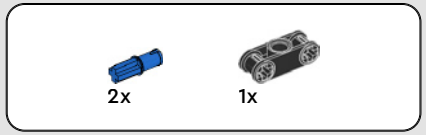

76

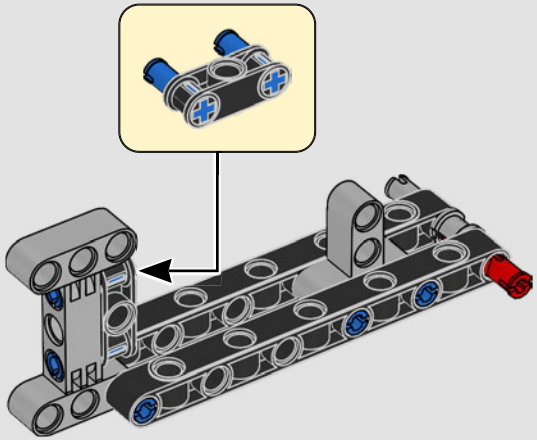

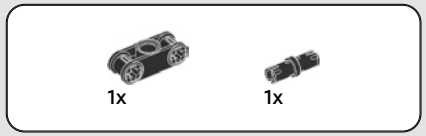

77

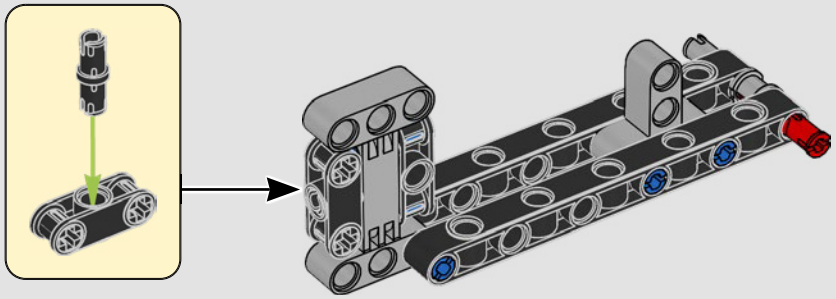

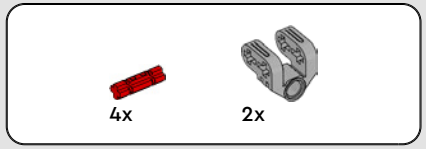

78

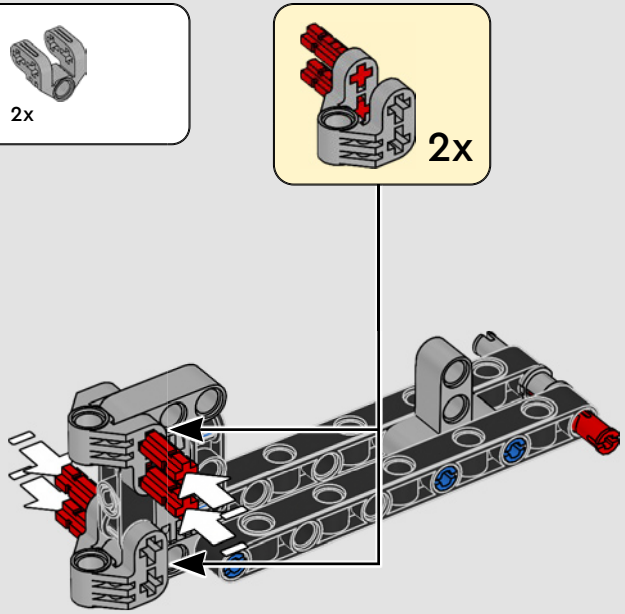

79

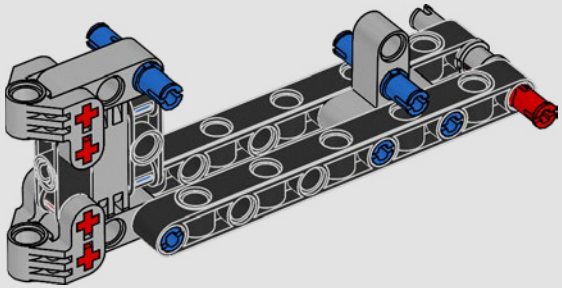

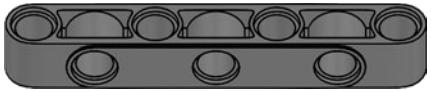

7 1:1

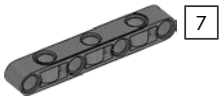

80

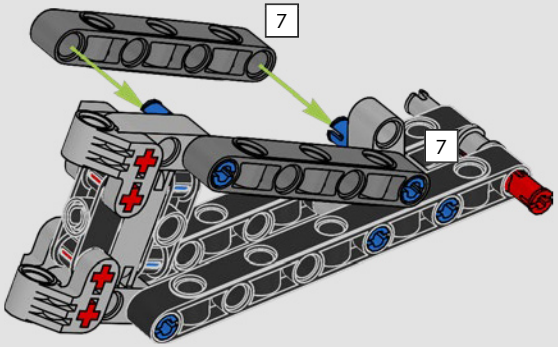

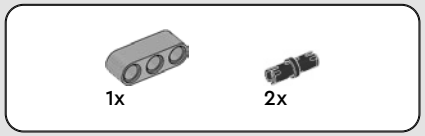

81

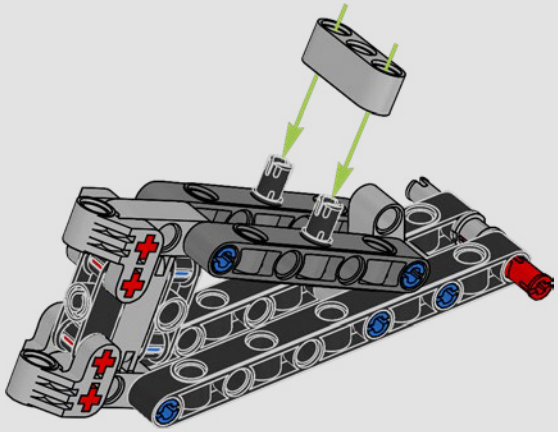

82

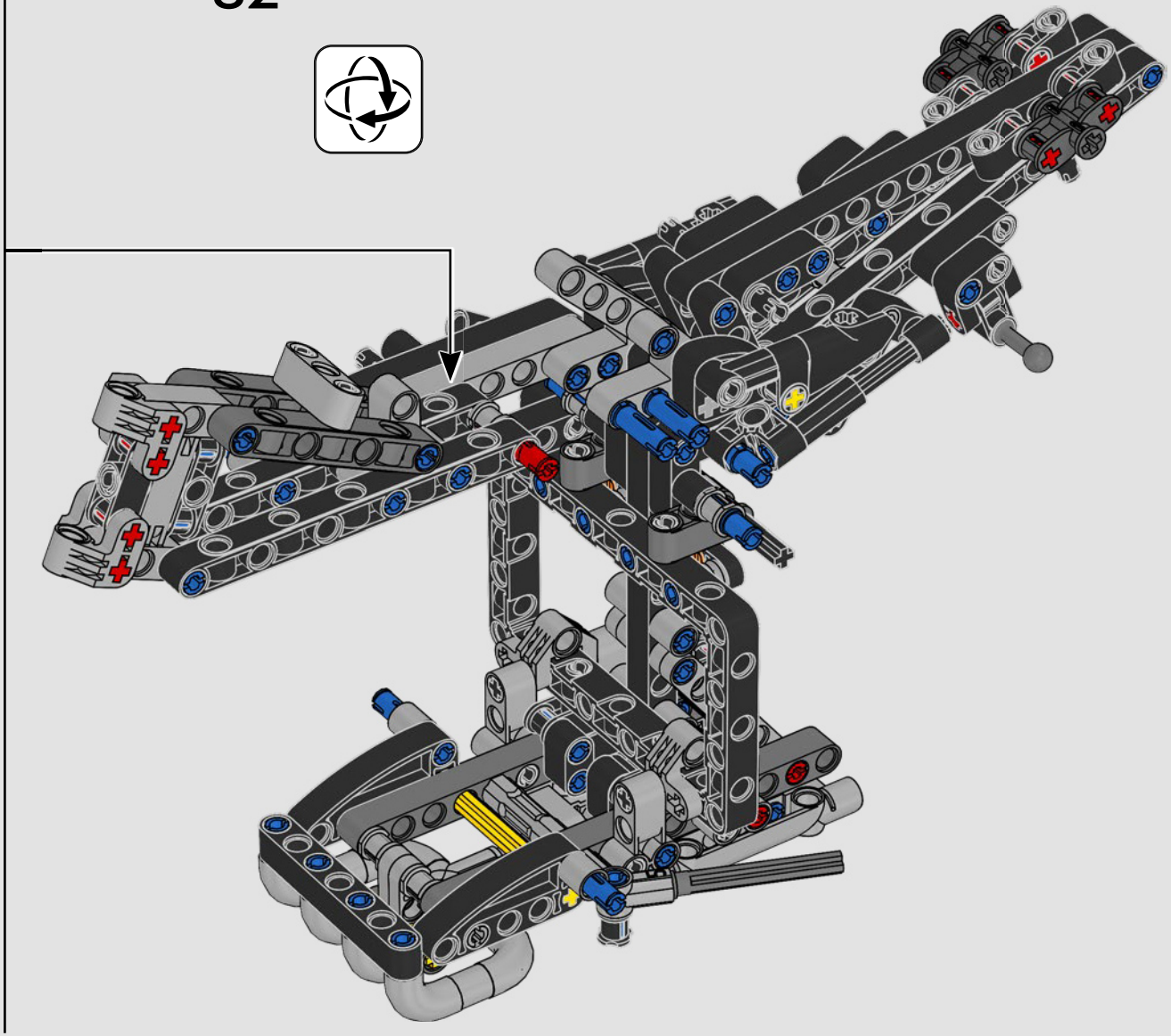

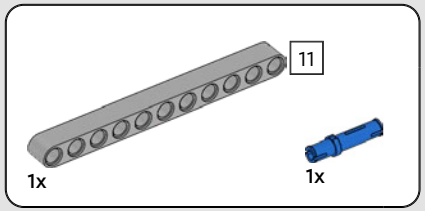

83

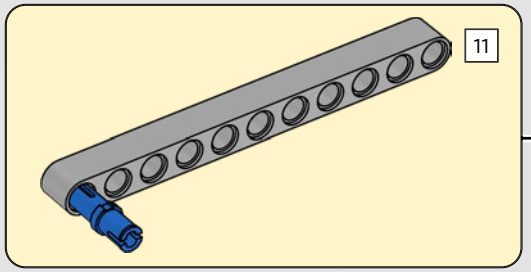

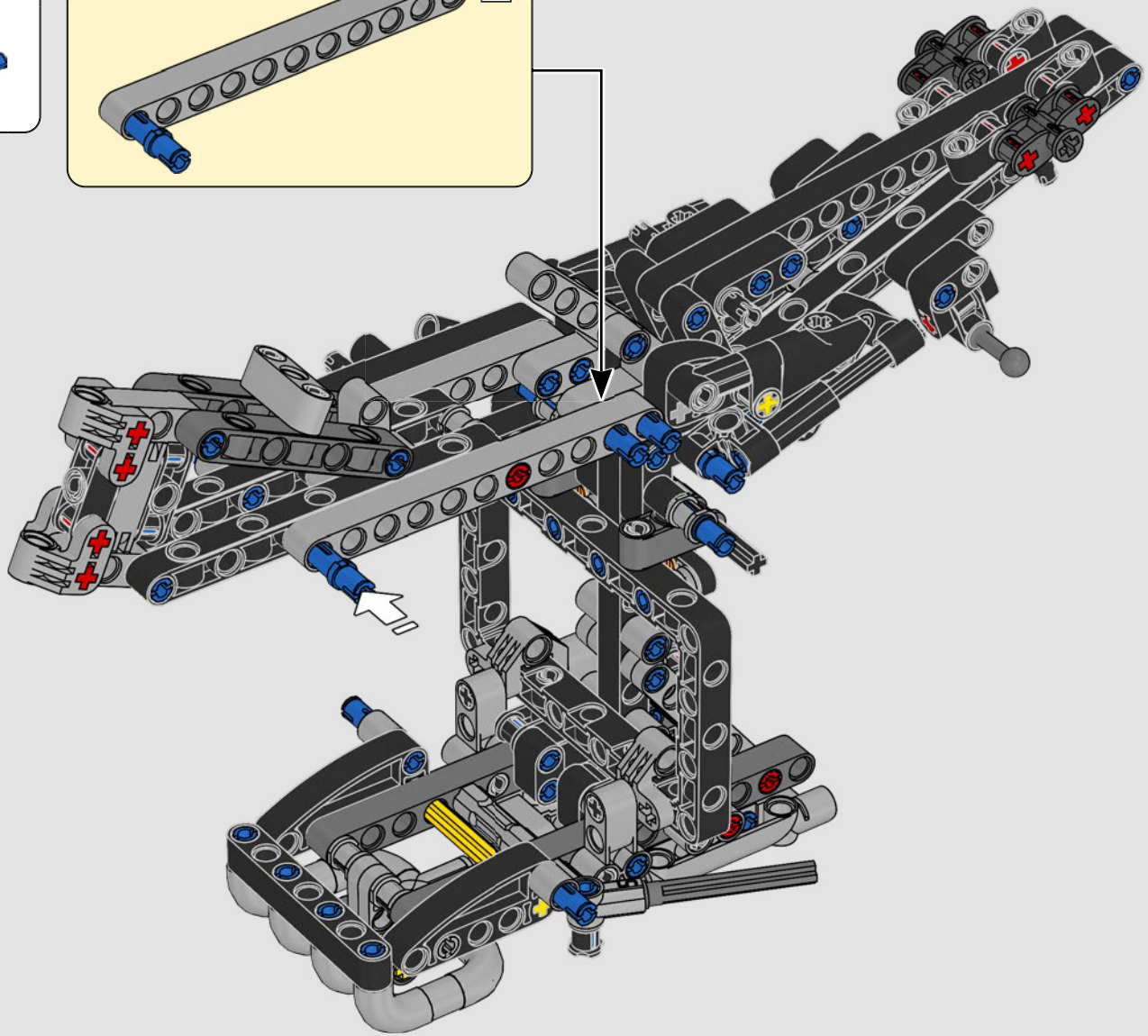

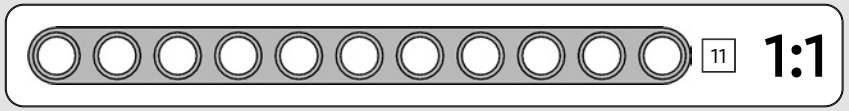

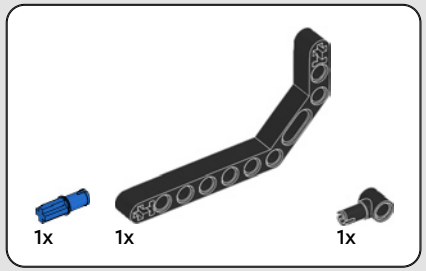

84

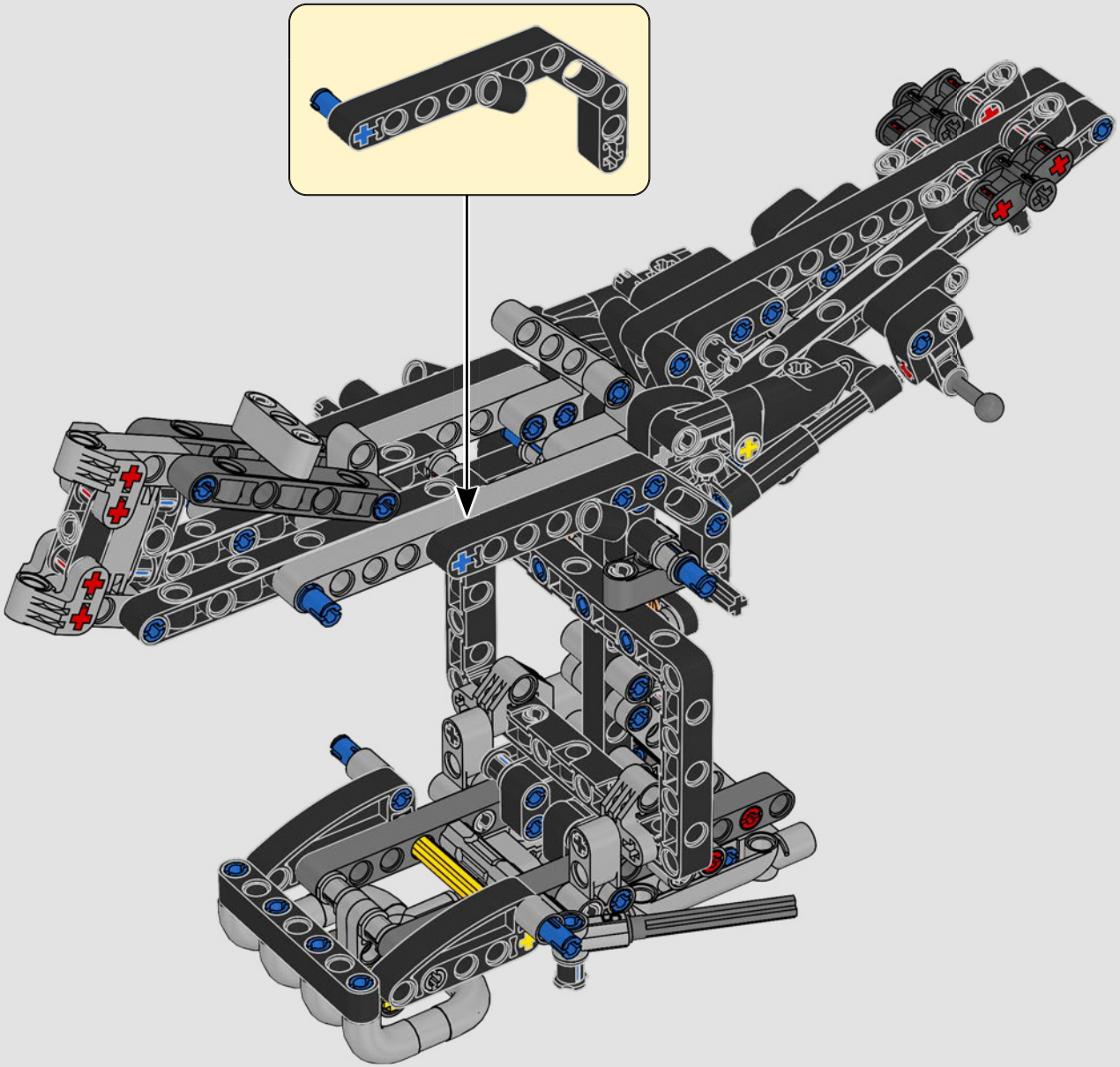

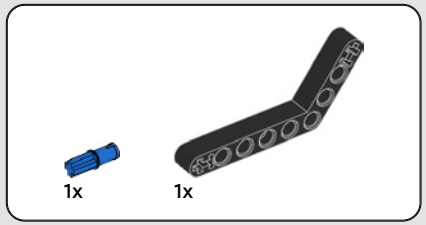

85

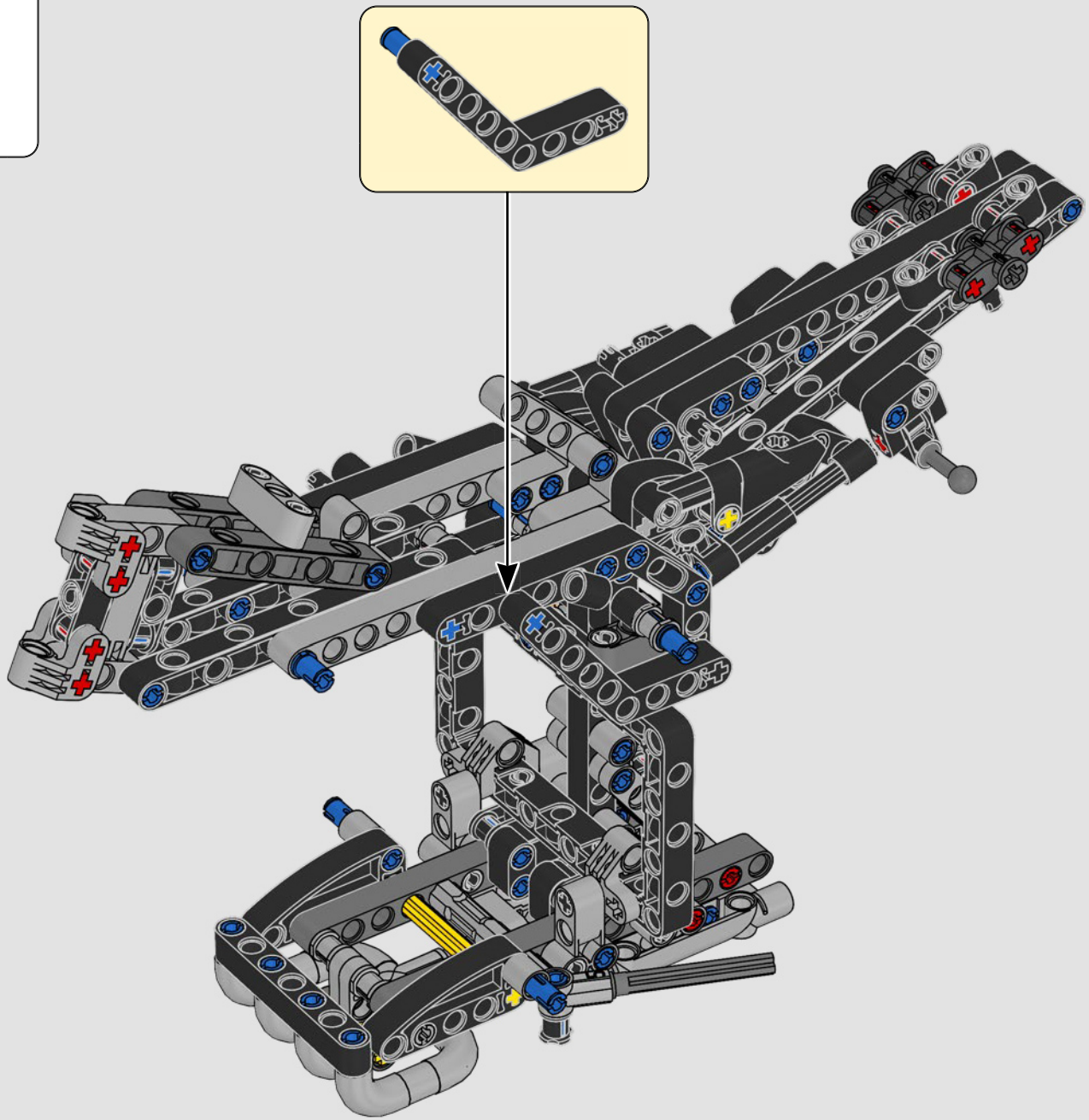

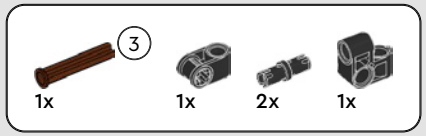

86

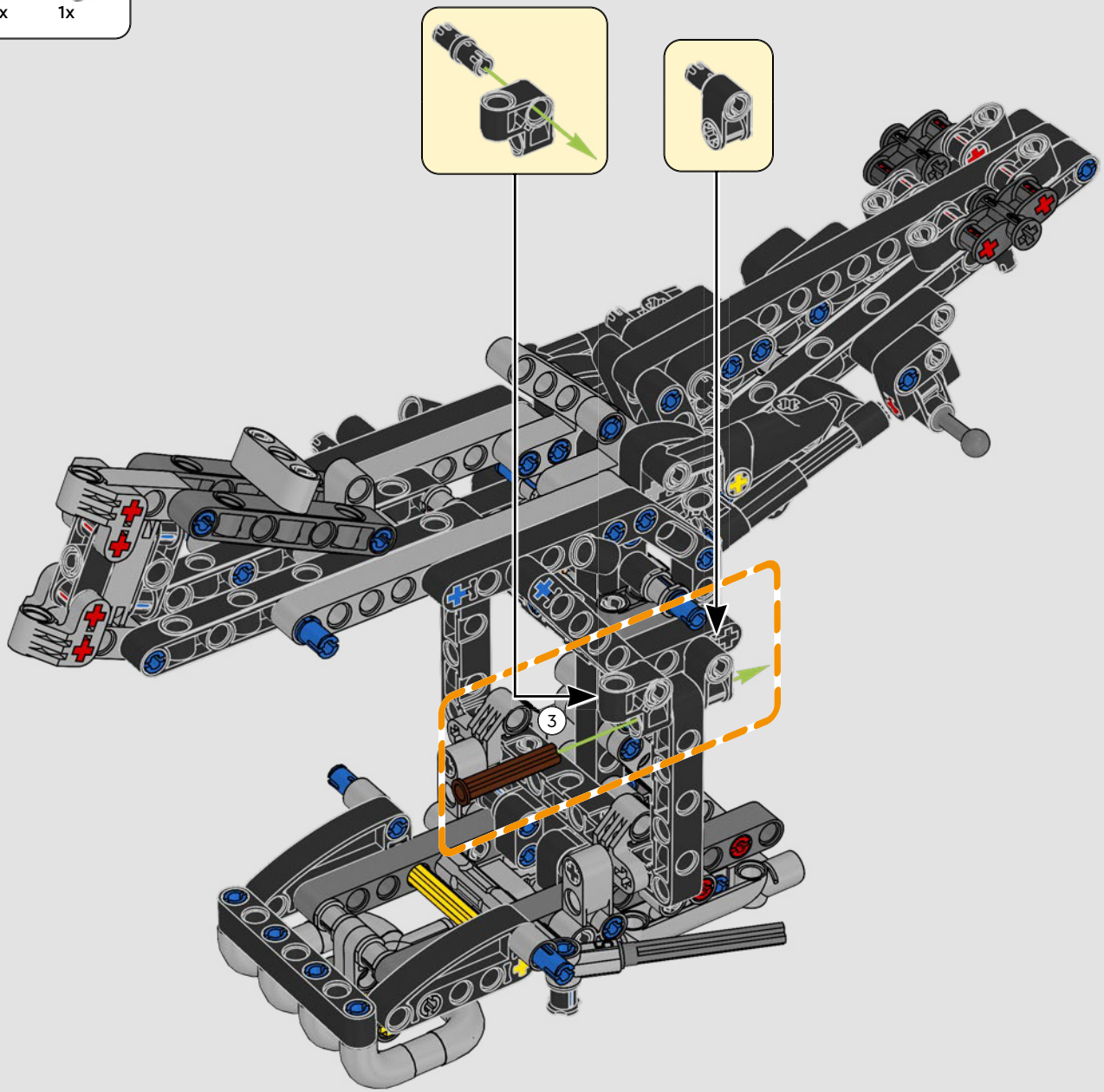

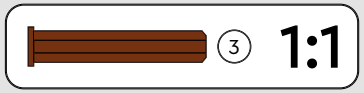

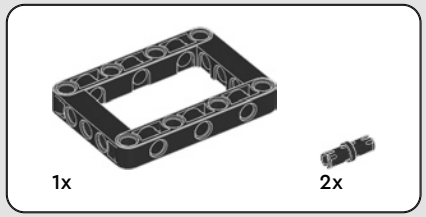

87

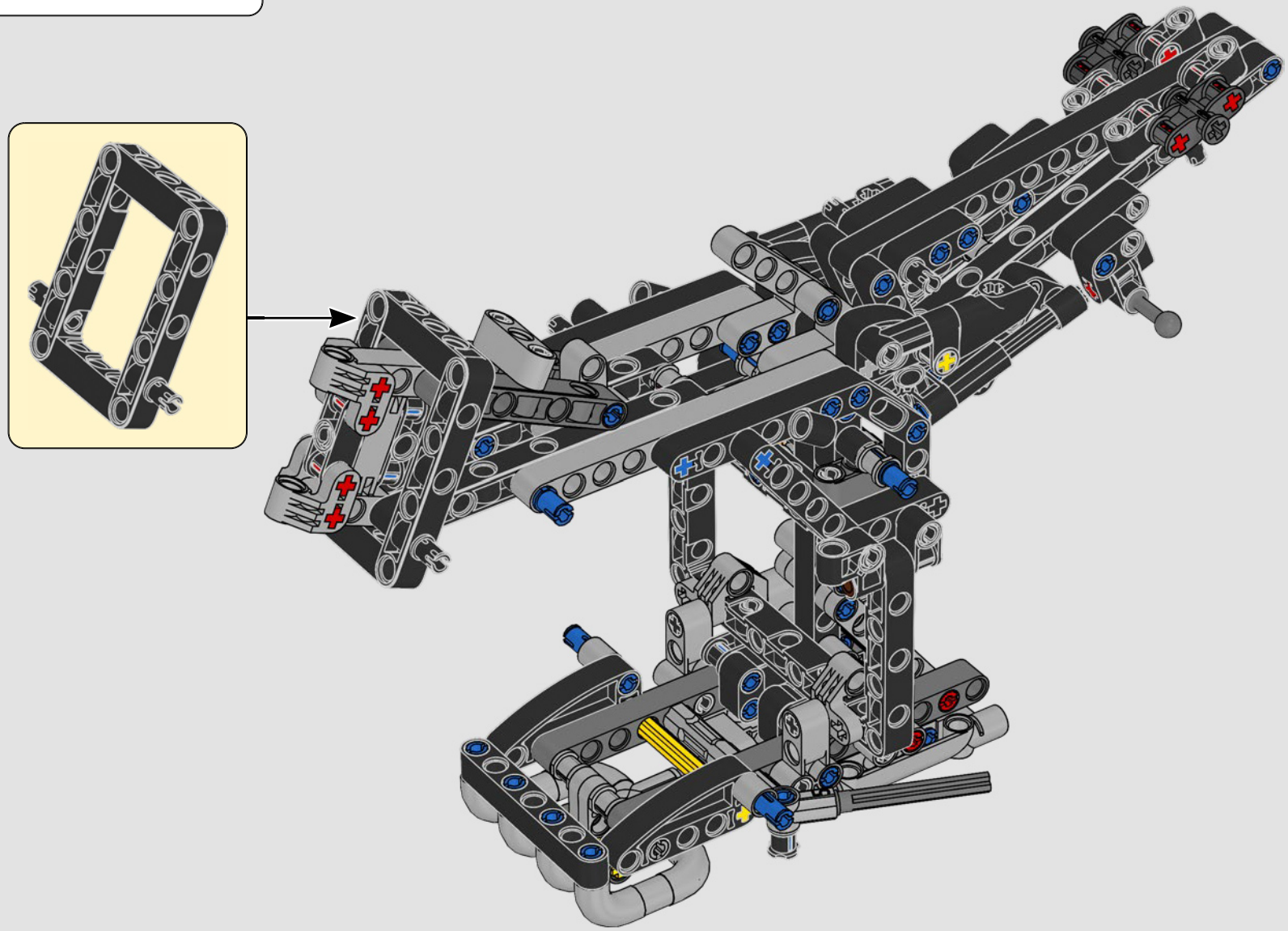

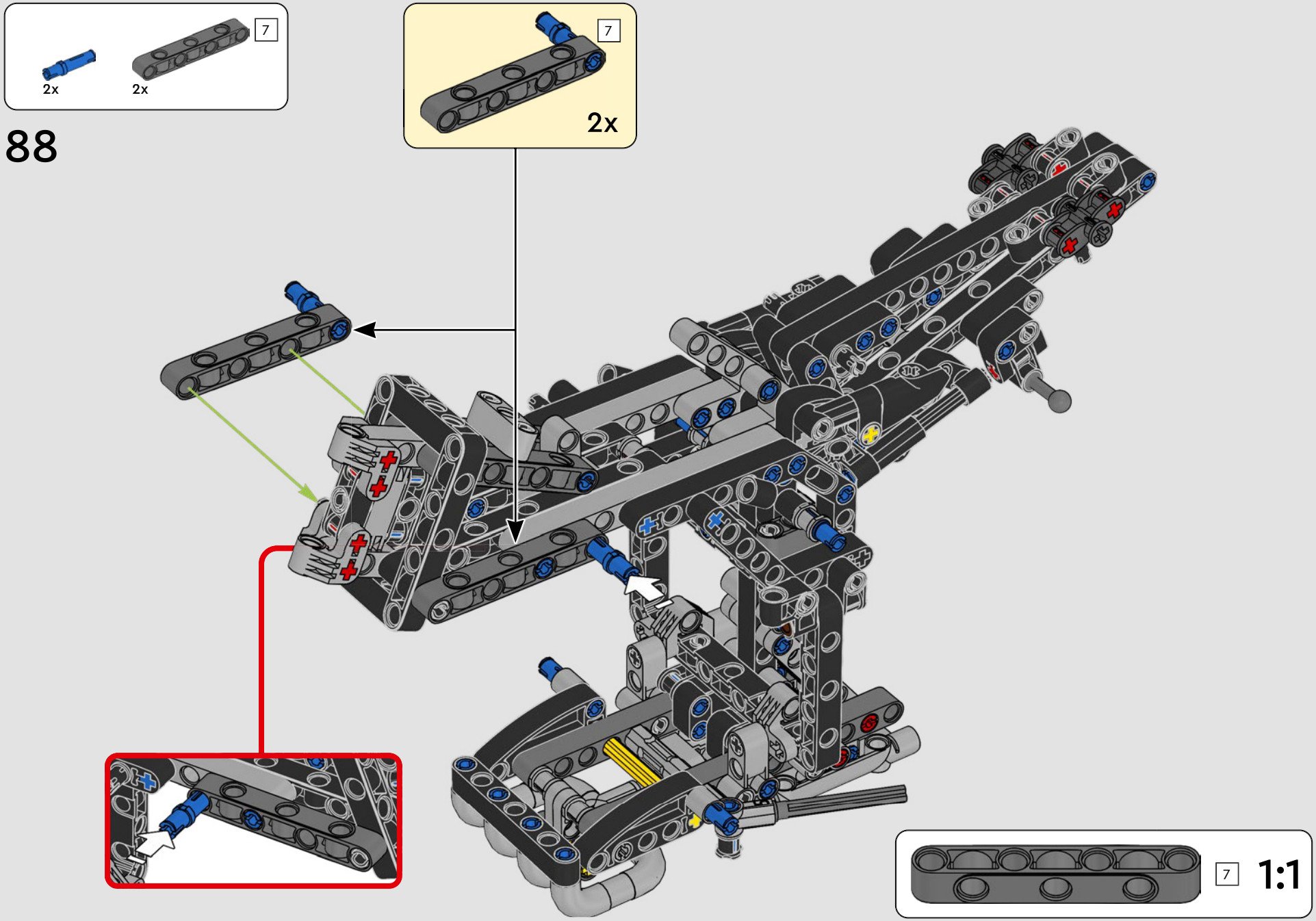
7
2x
2x
88
7
2x
7
1:1

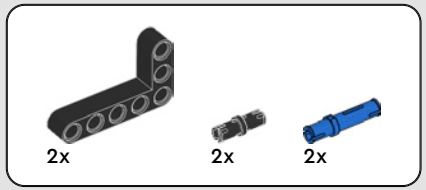

89

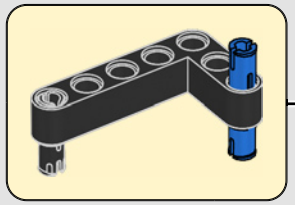

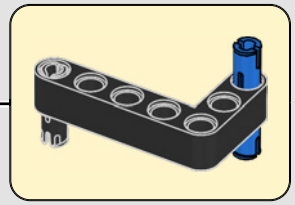

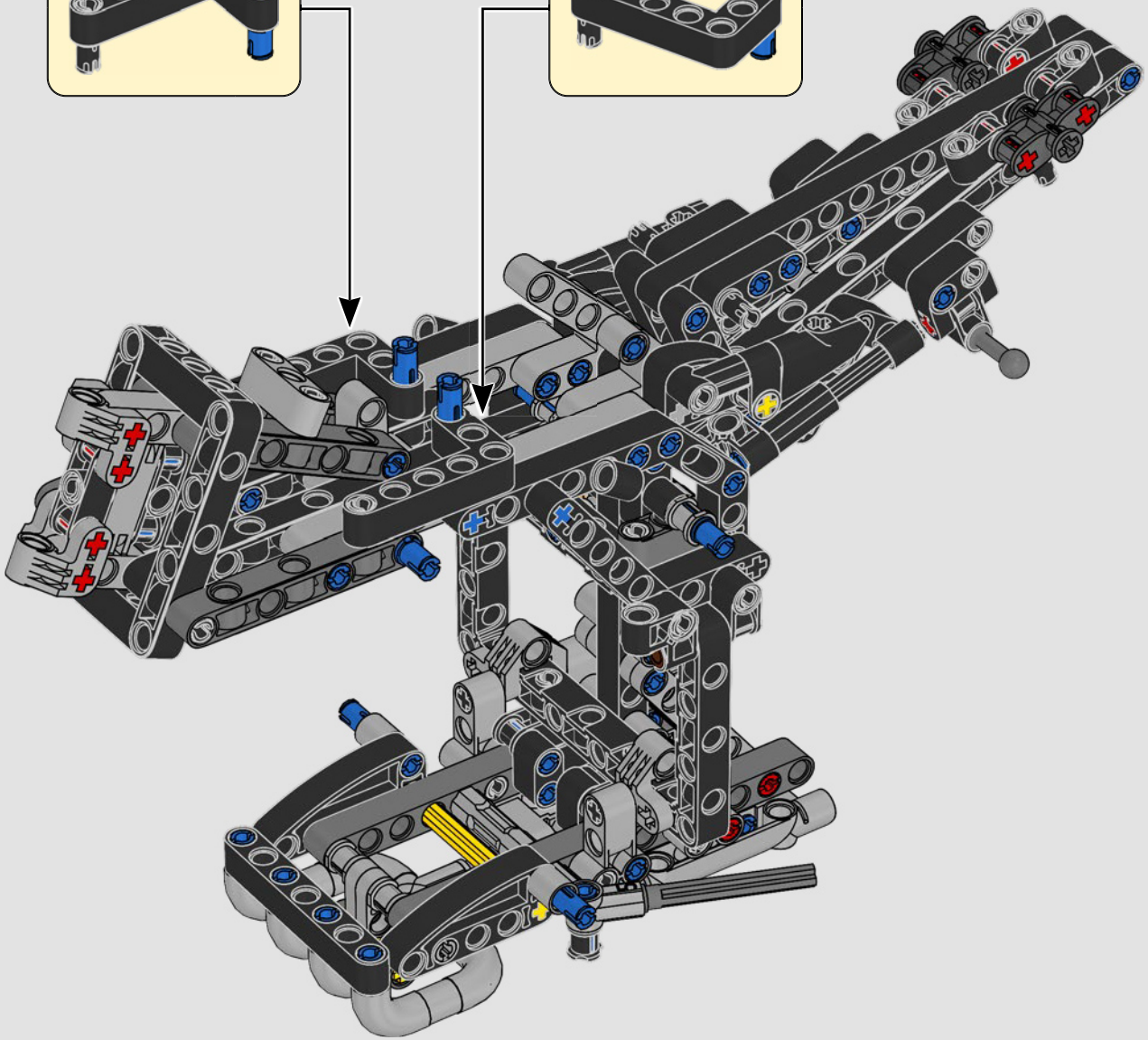

1x

90

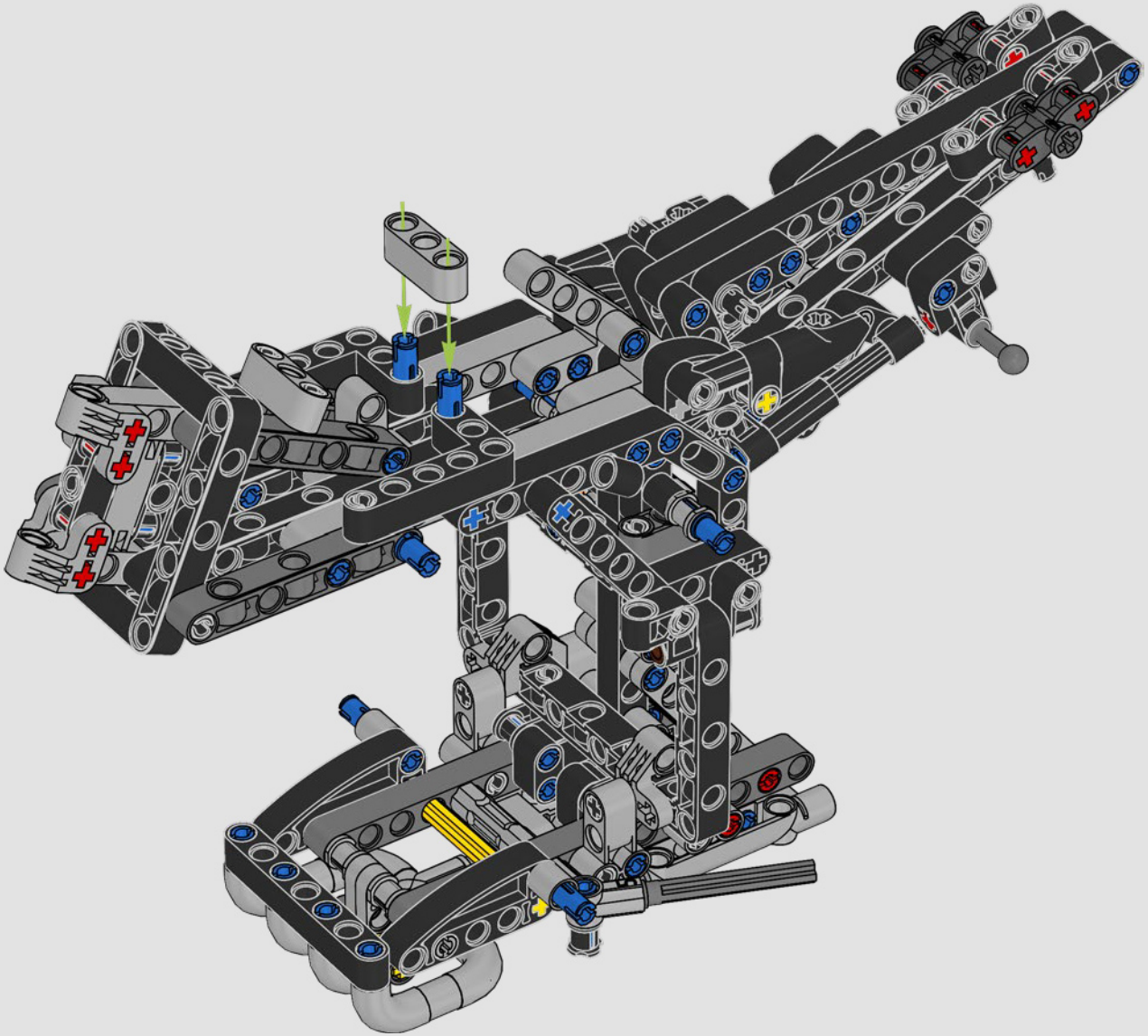

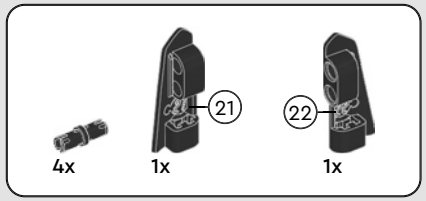

91

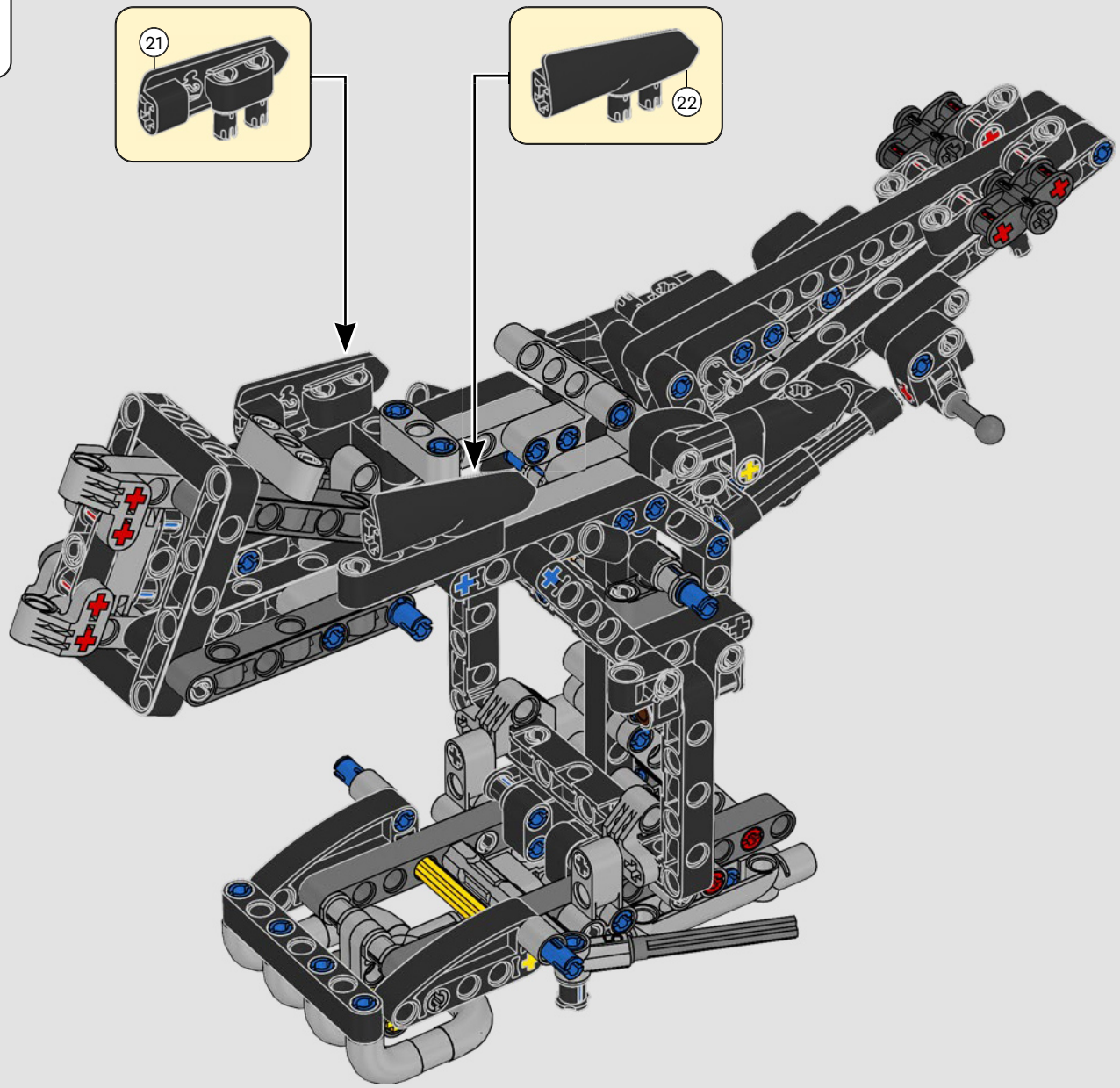

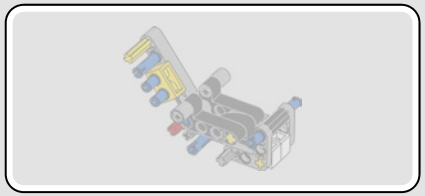

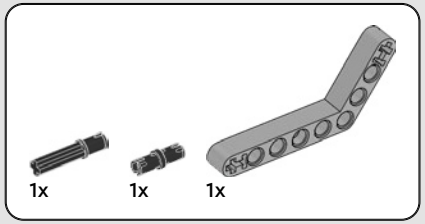

92

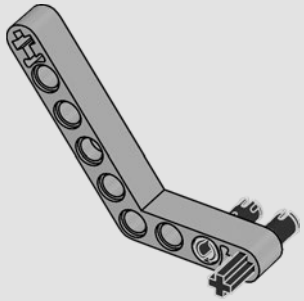

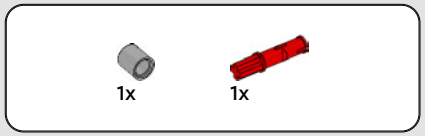

93

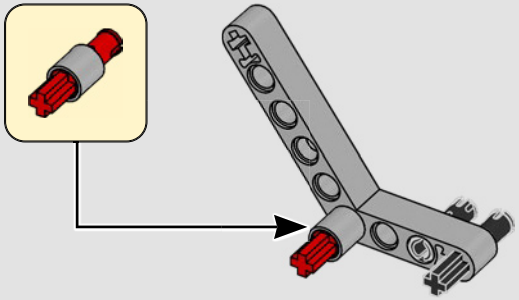

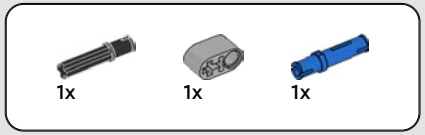

94

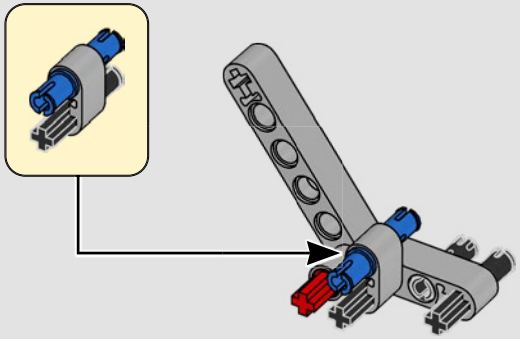

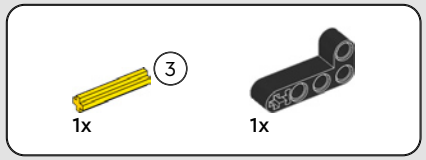

95

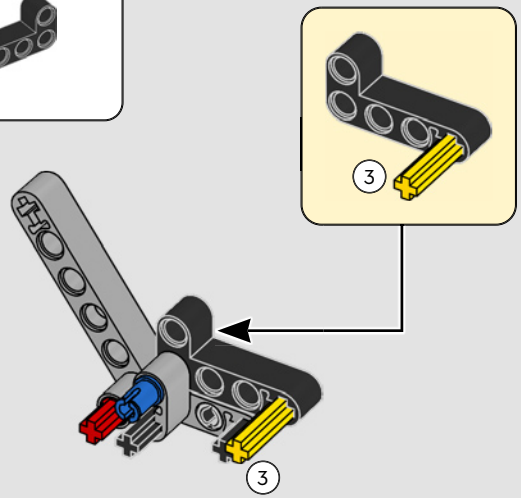

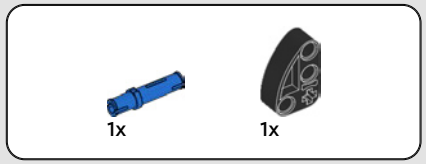

96

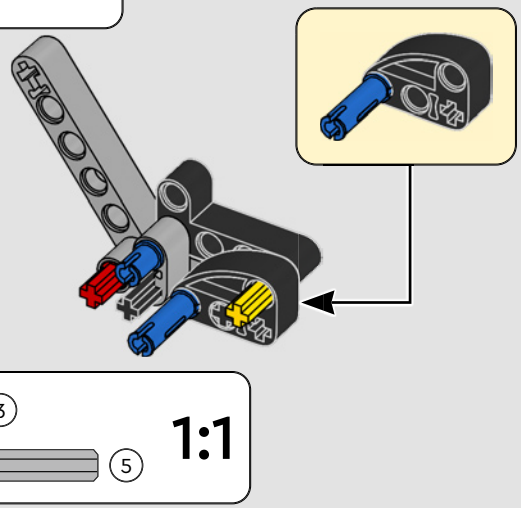

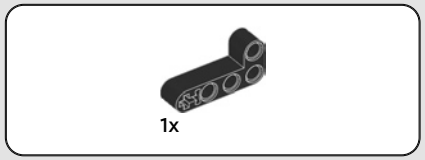

97

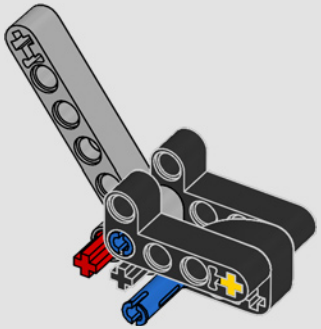

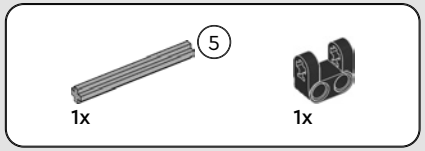

98

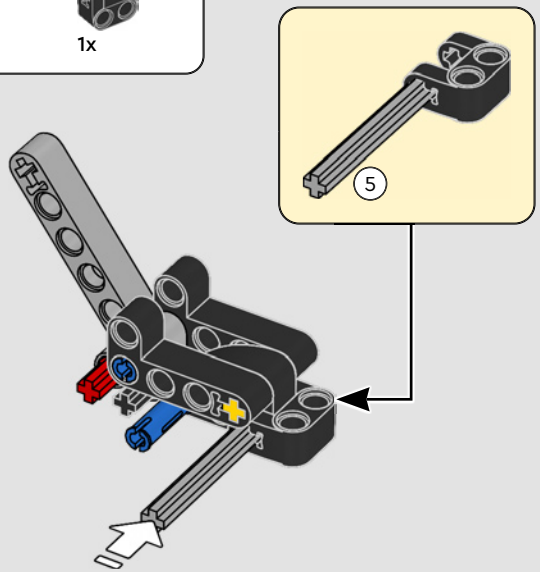

99

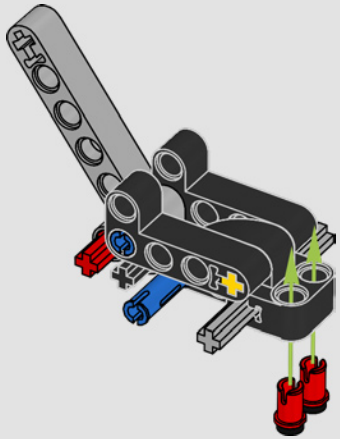

100

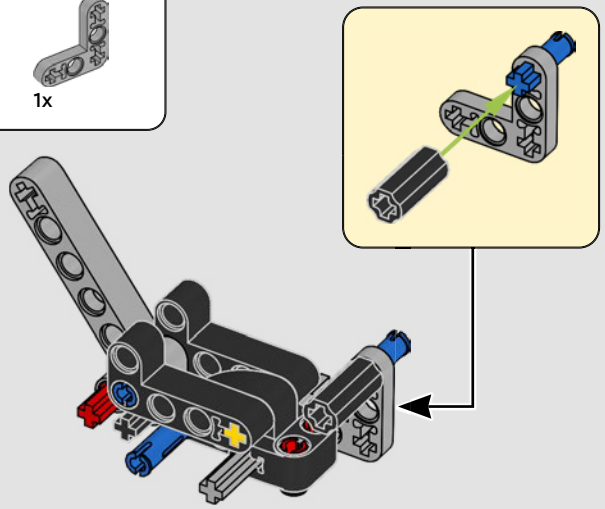

101

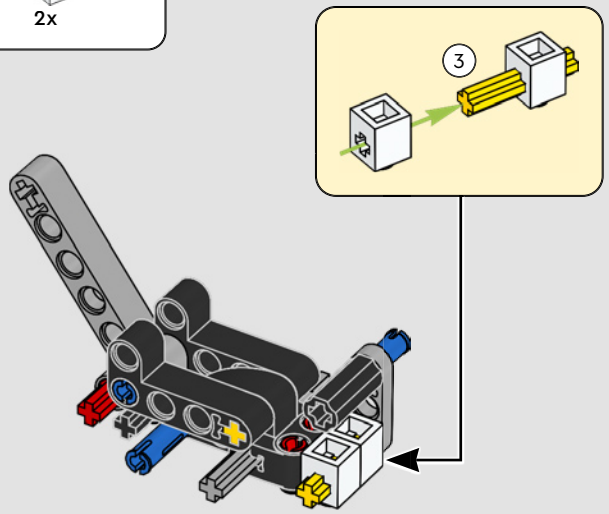

102

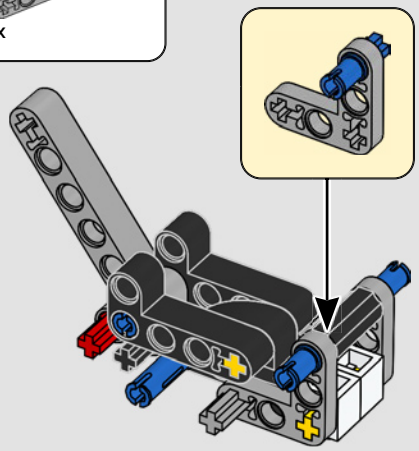

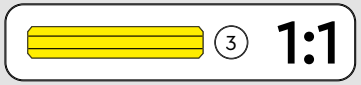

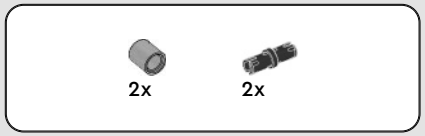

103

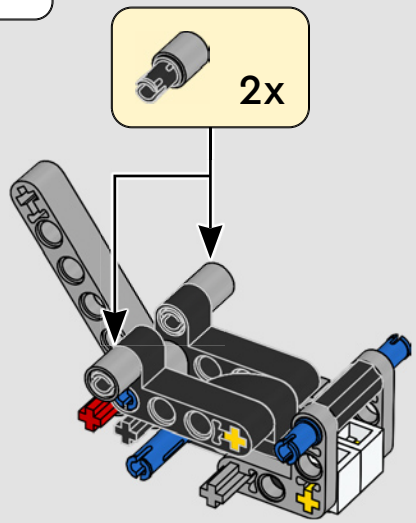

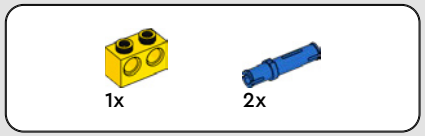

104

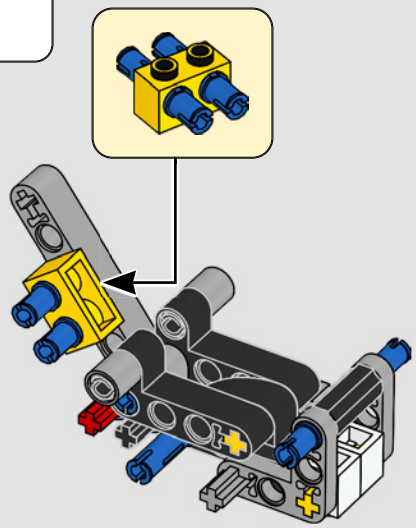

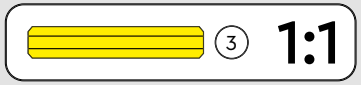

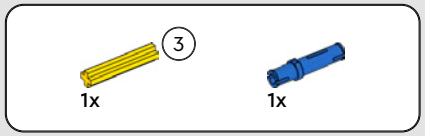

105

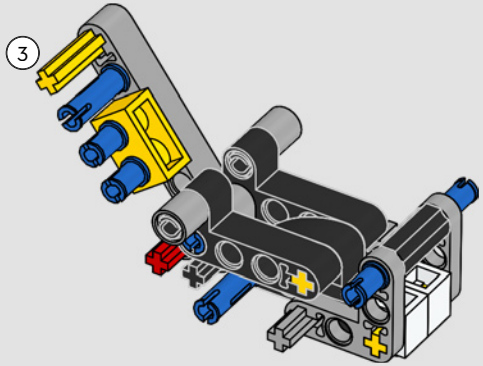

106

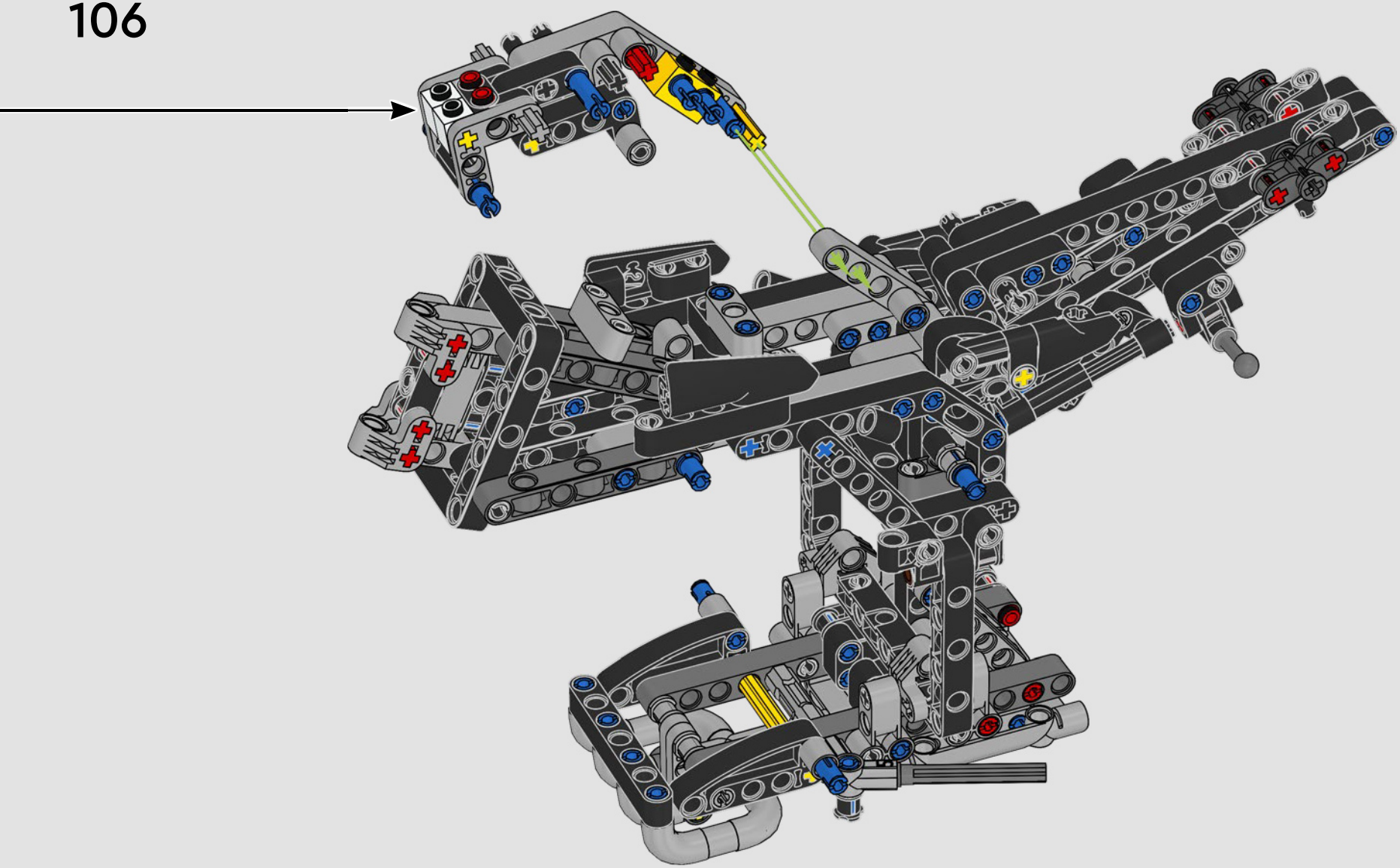

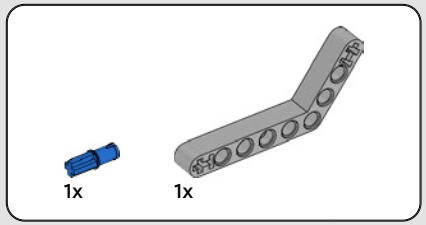

107

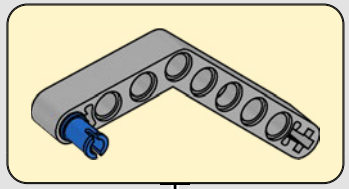

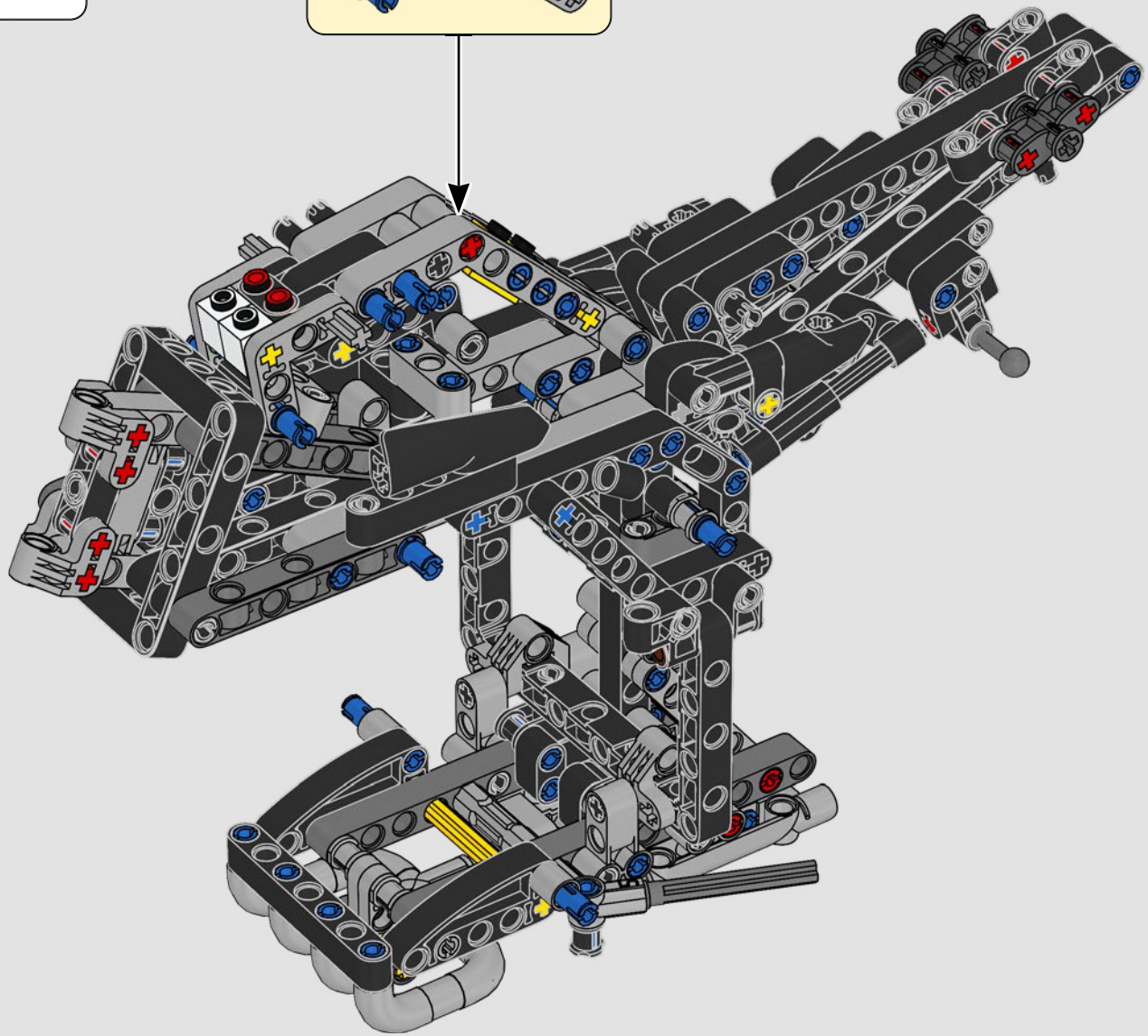

2x

108

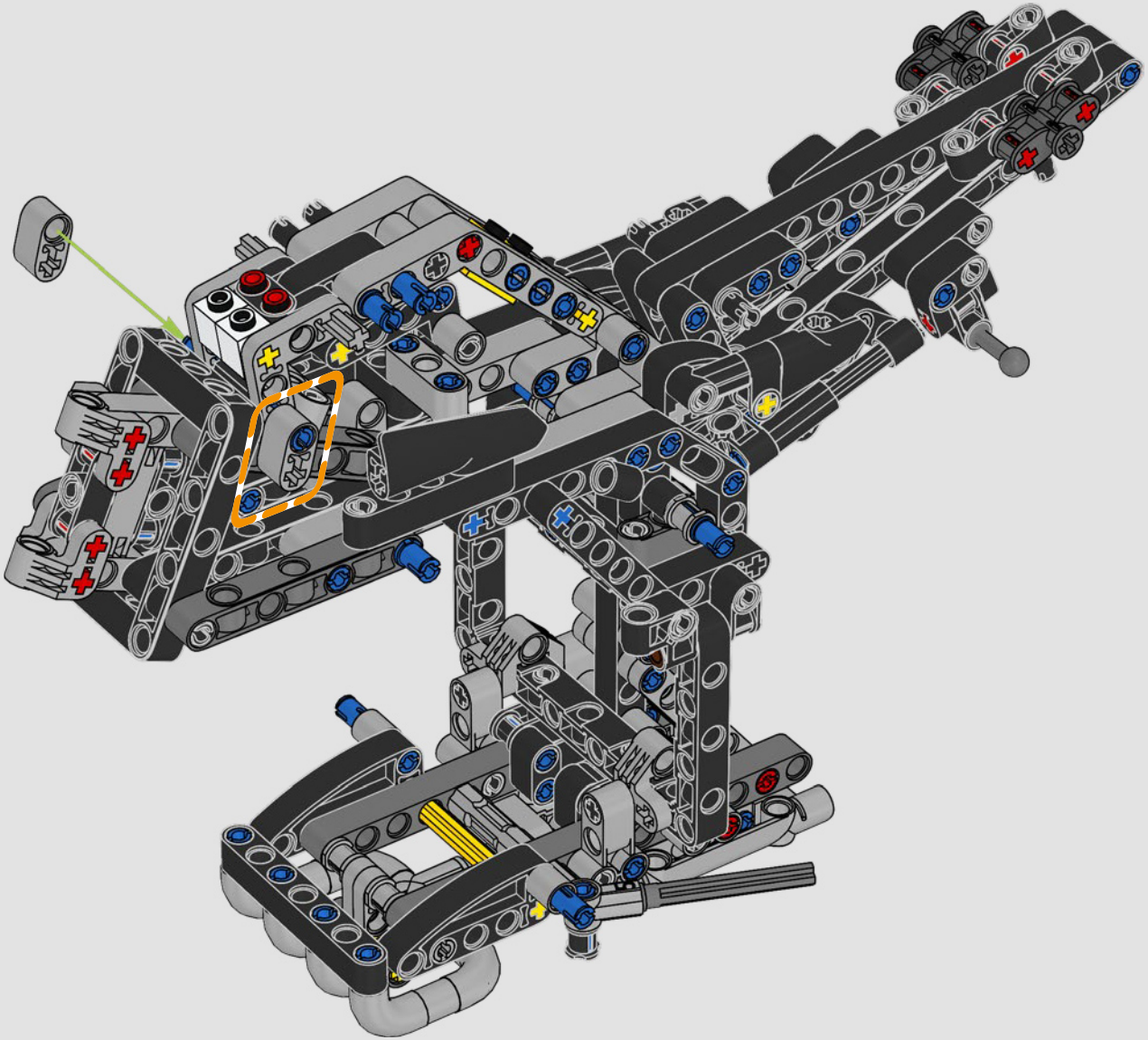

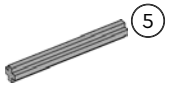

109

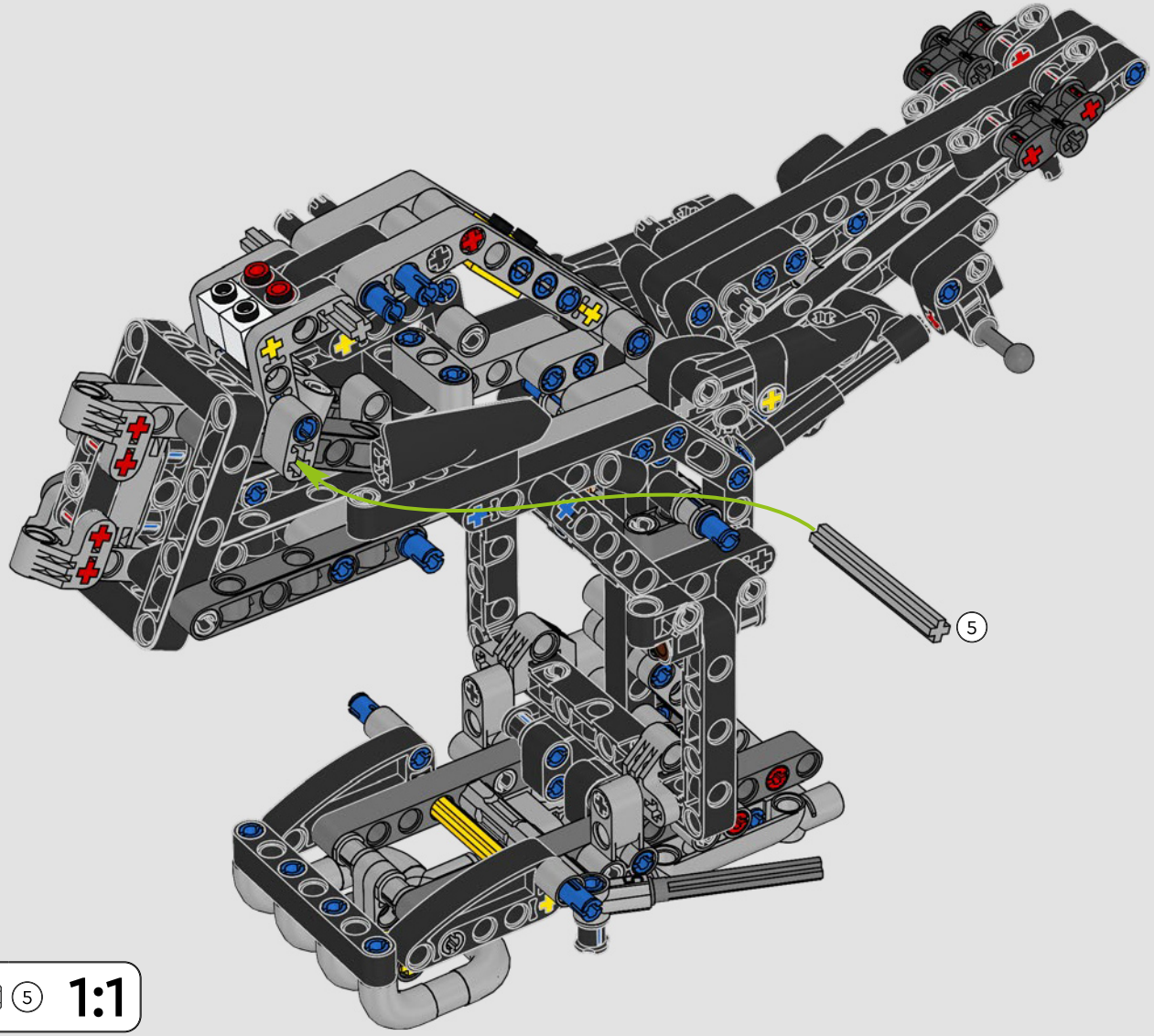

1:1

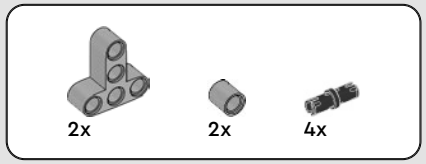

110

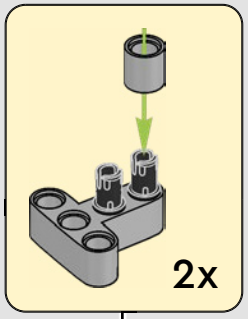

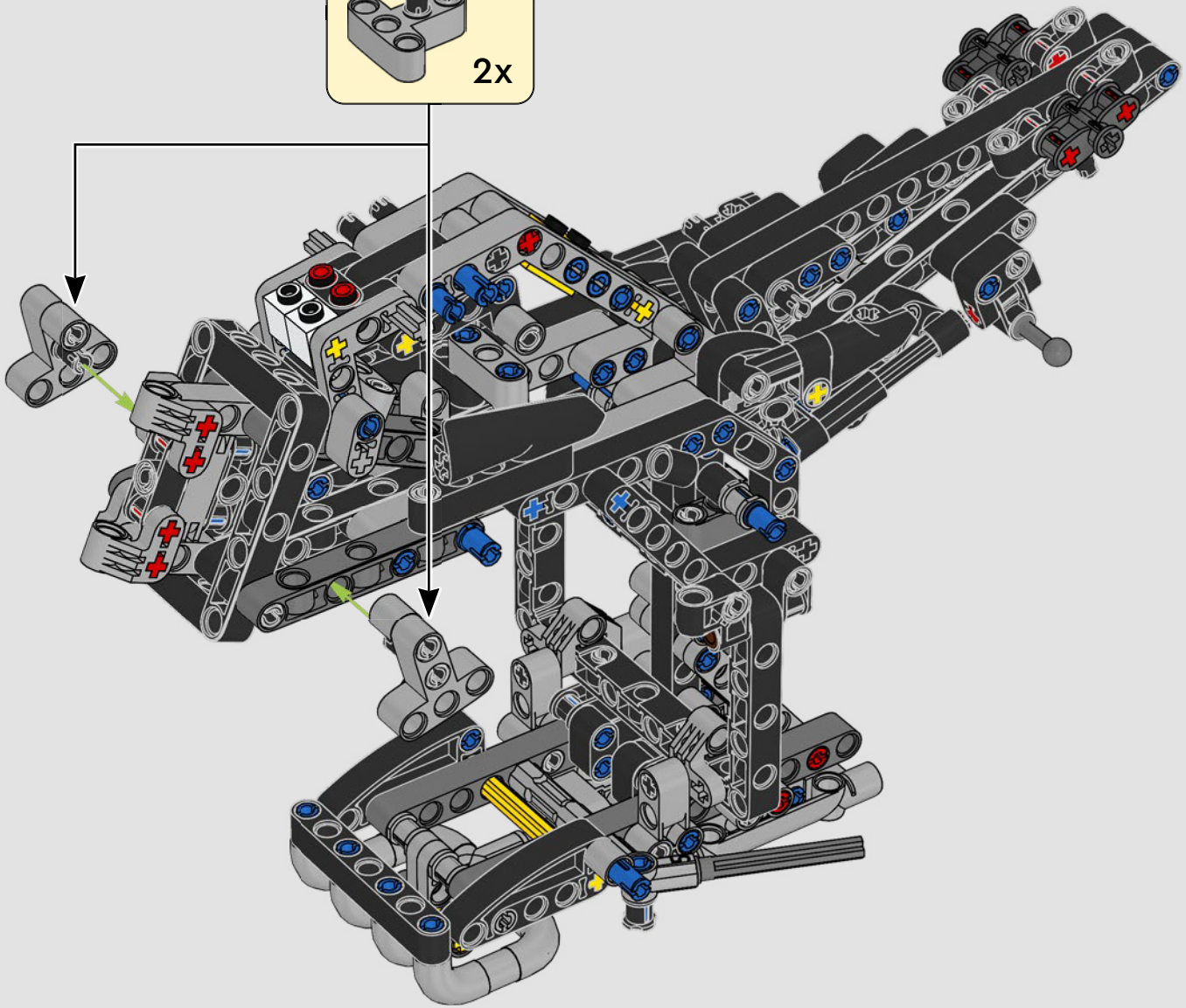

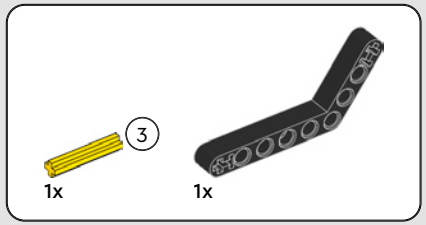

111

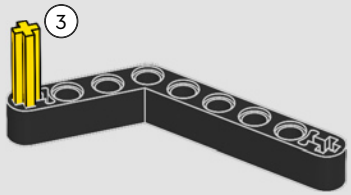

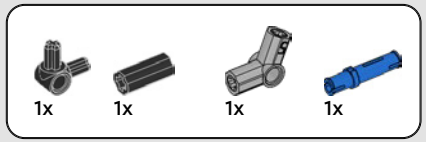

112

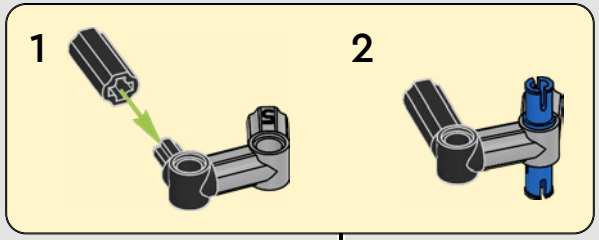

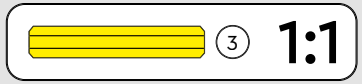

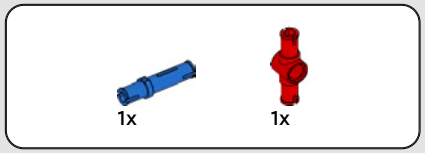

113

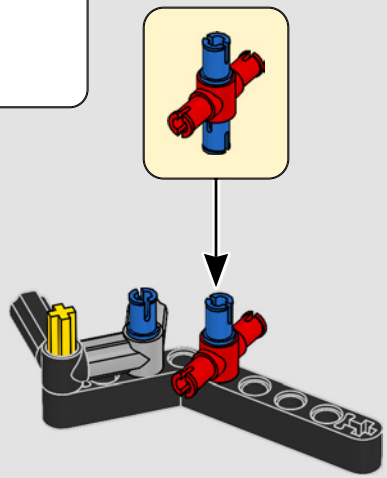

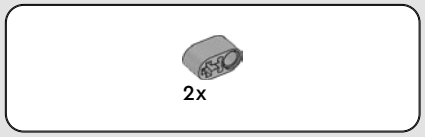

114

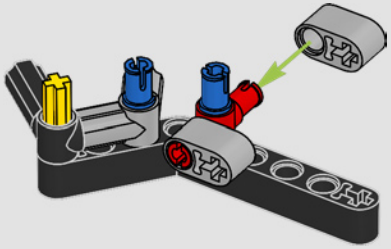

115

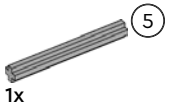

116

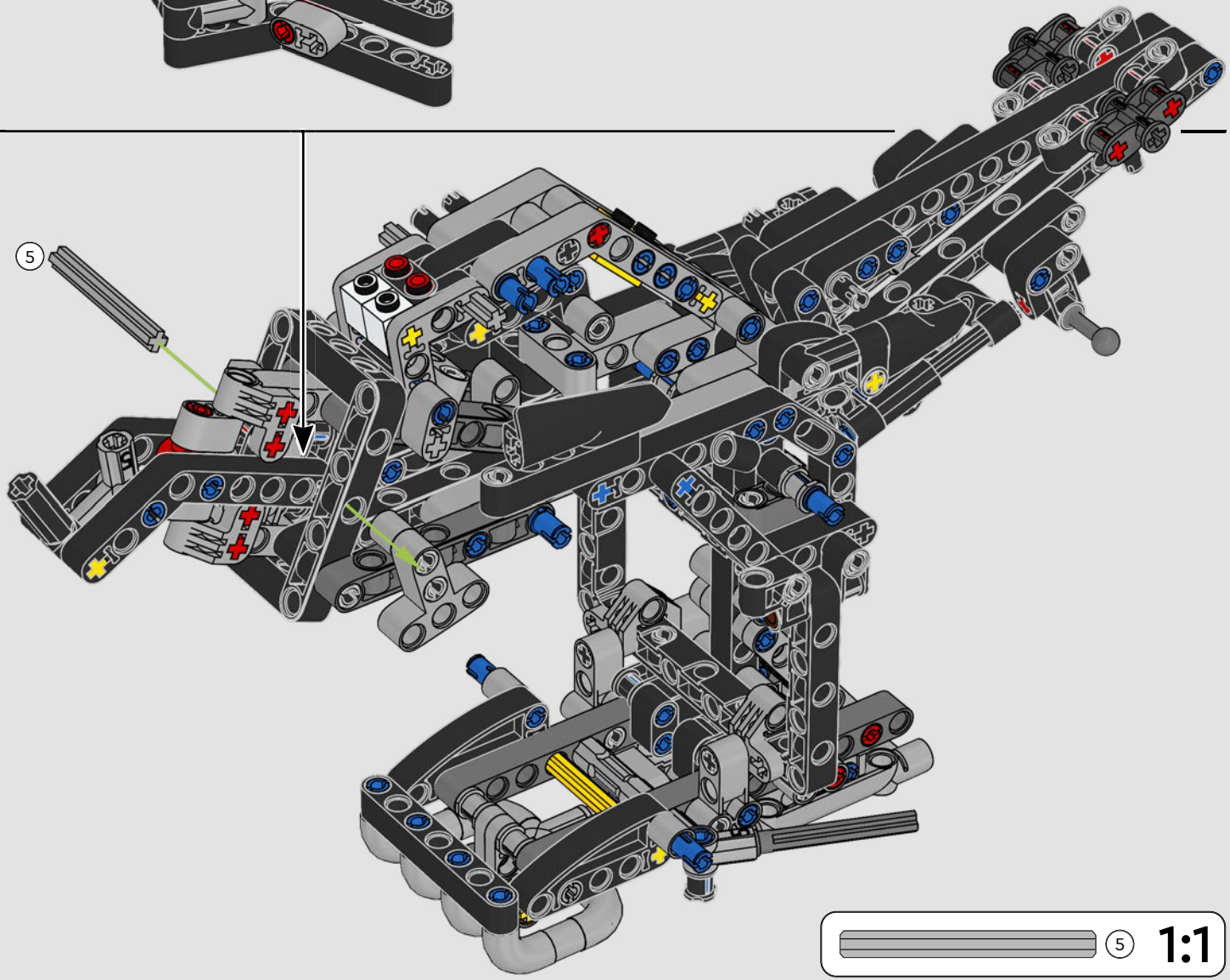

1:1

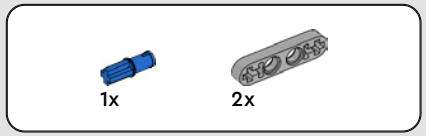

117

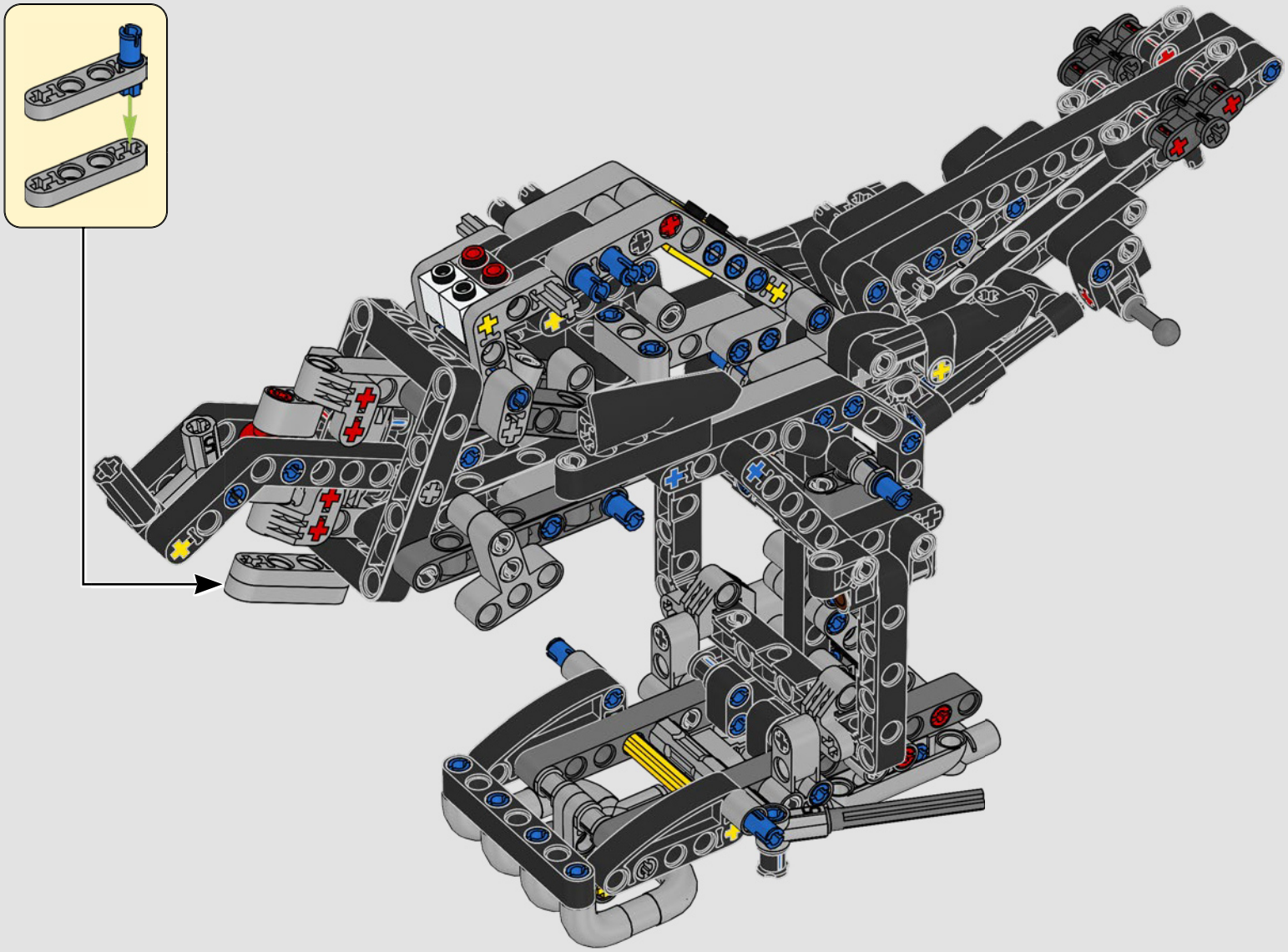

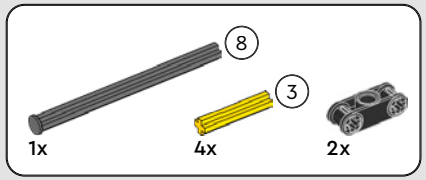

118

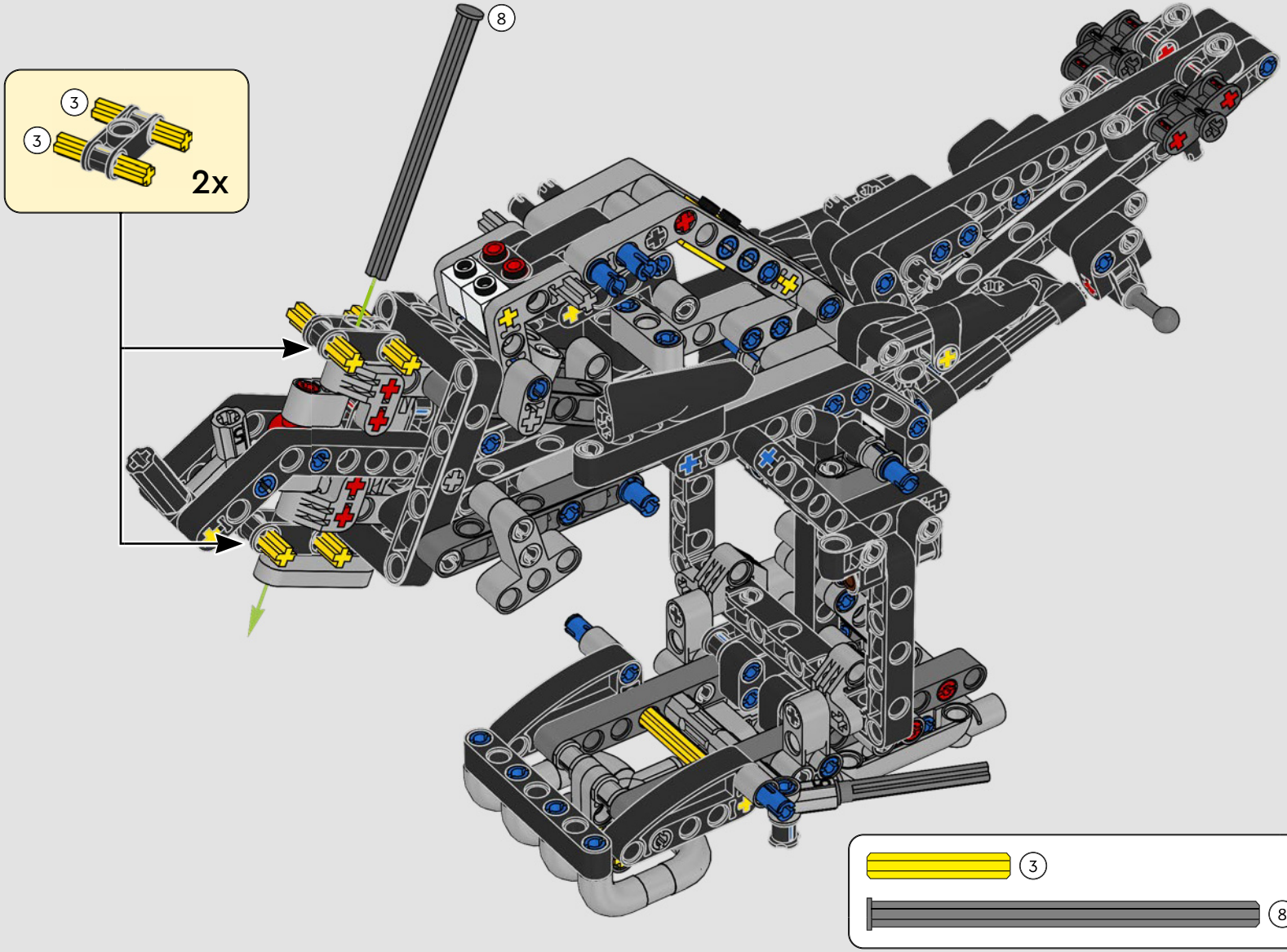

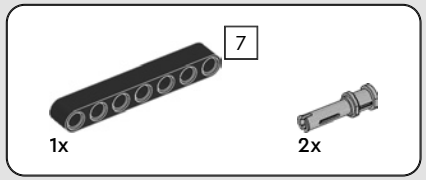

119

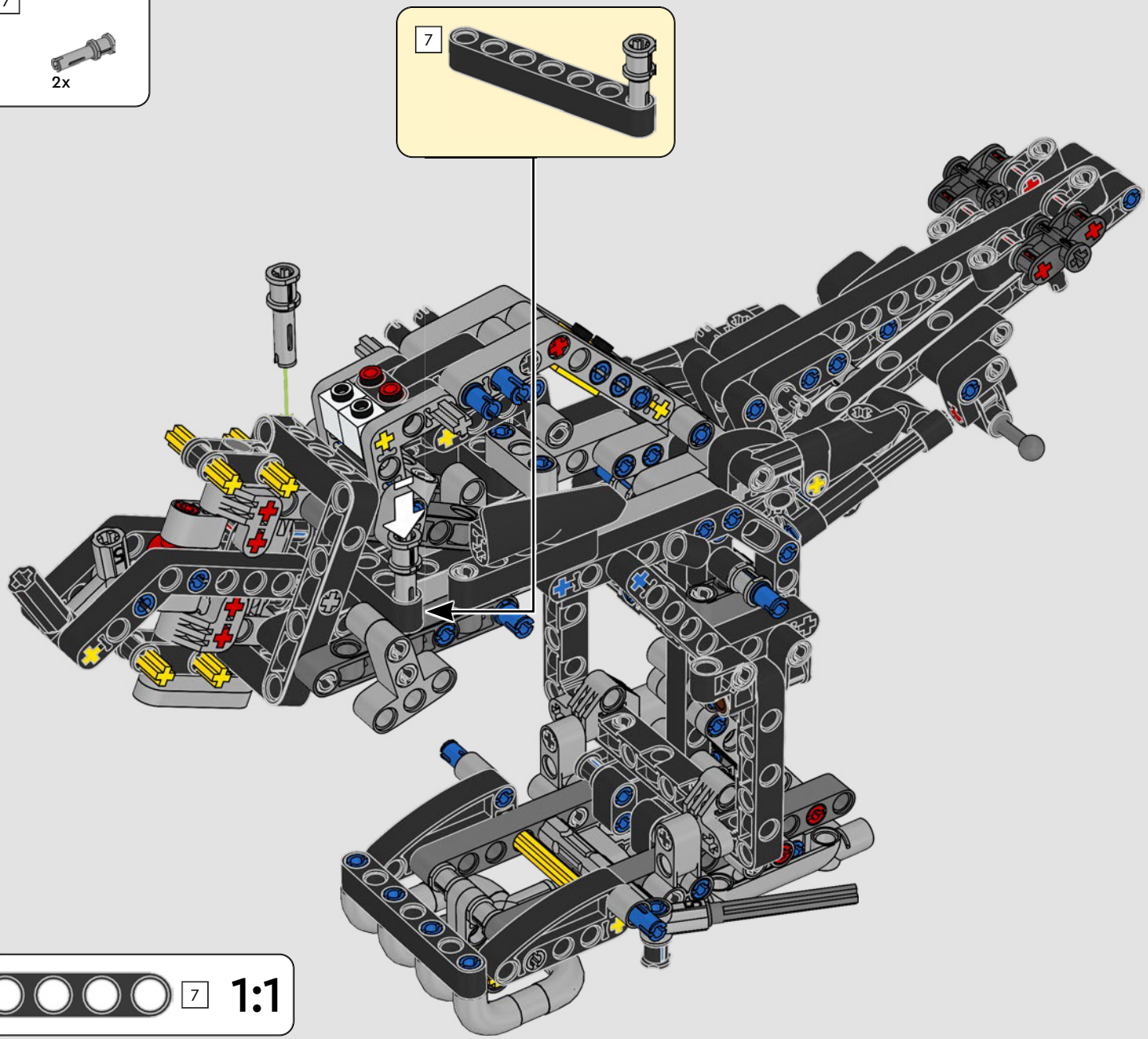

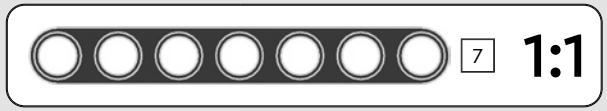

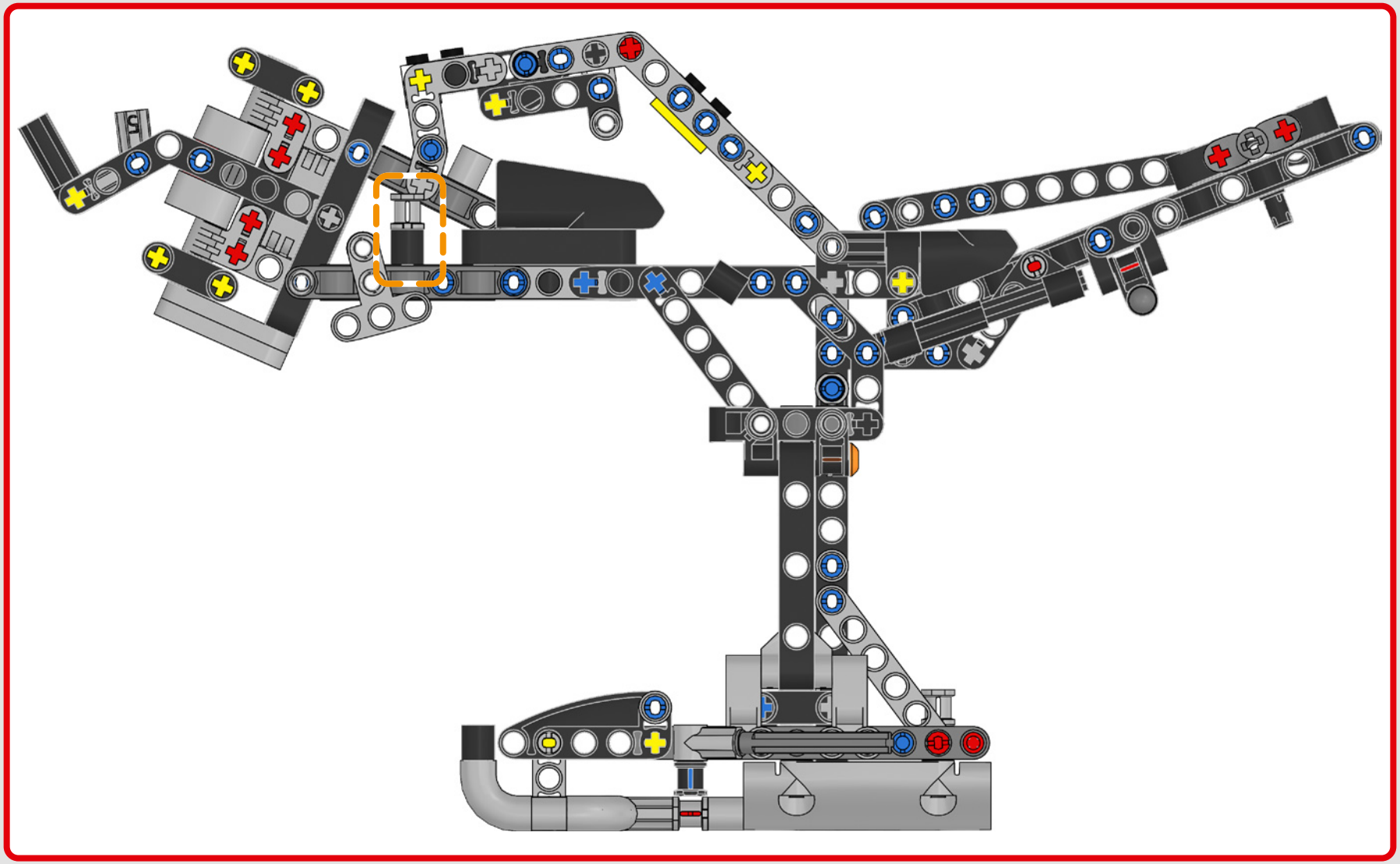

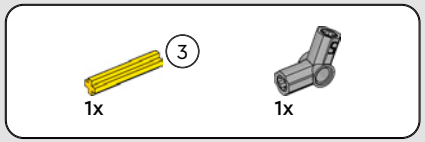

120

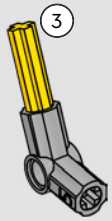

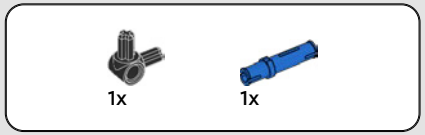

121

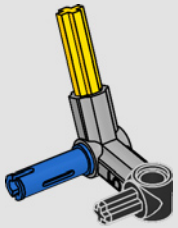

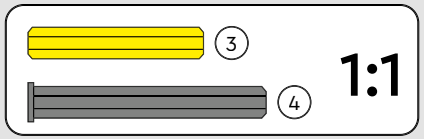

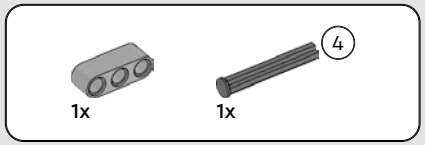

122

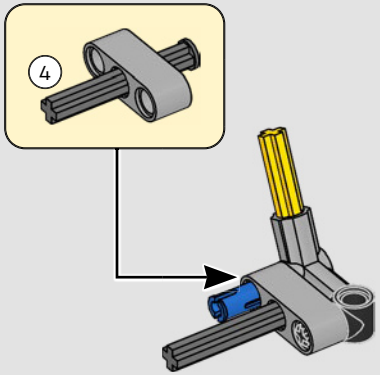

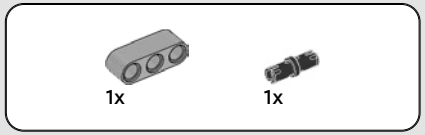

123

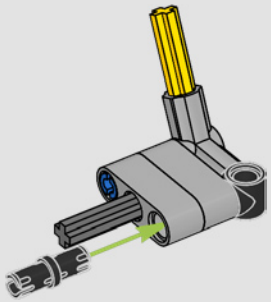

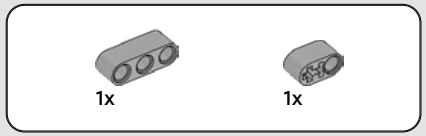

124

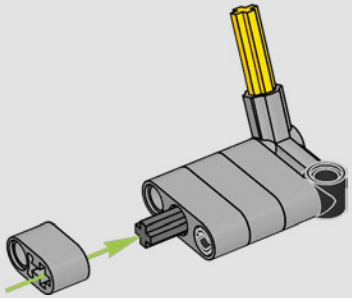

125

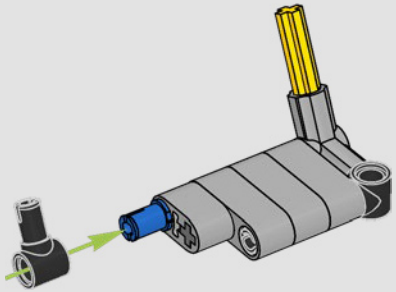

126

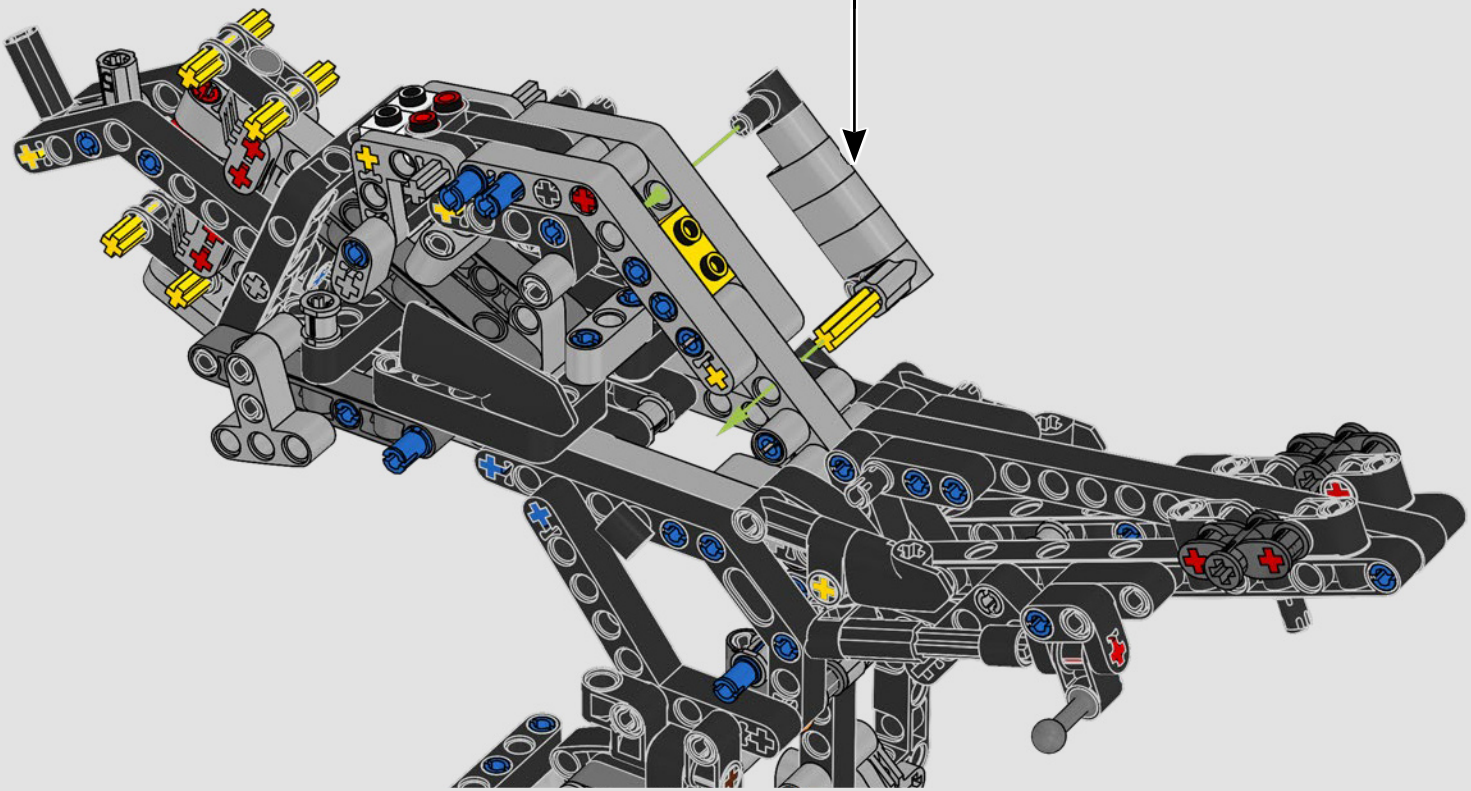

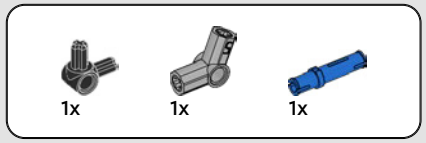

127

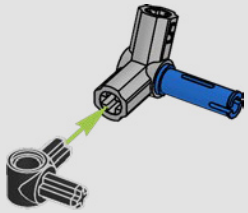

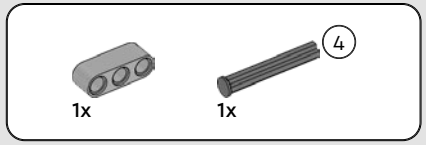

128

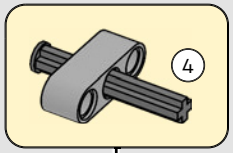

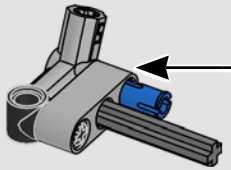

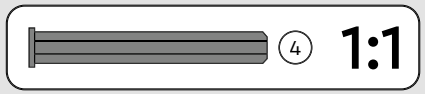

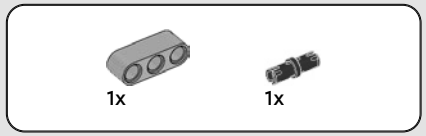

129

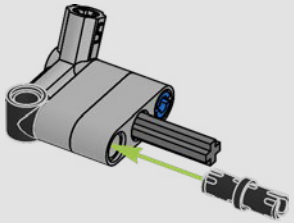

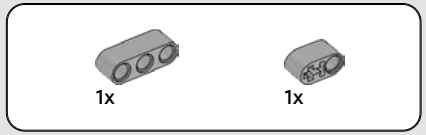

130

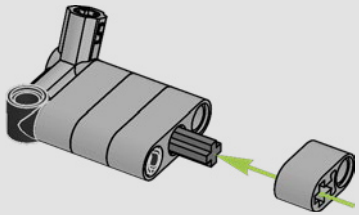

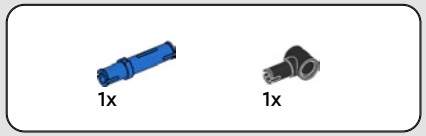

131

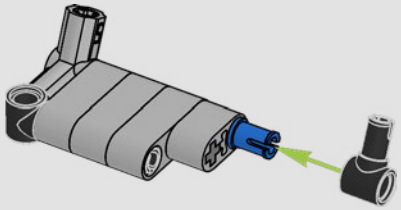

132

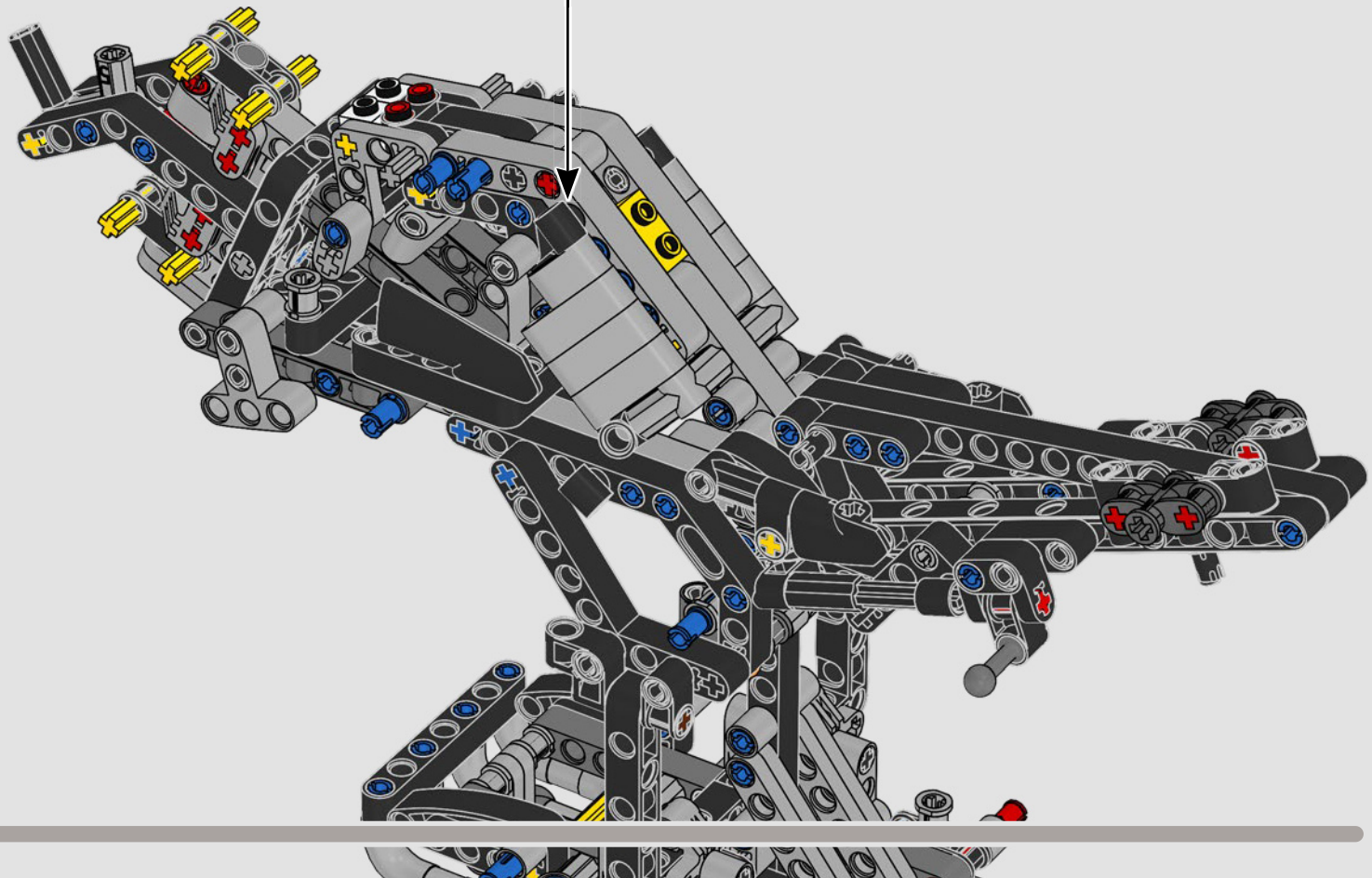

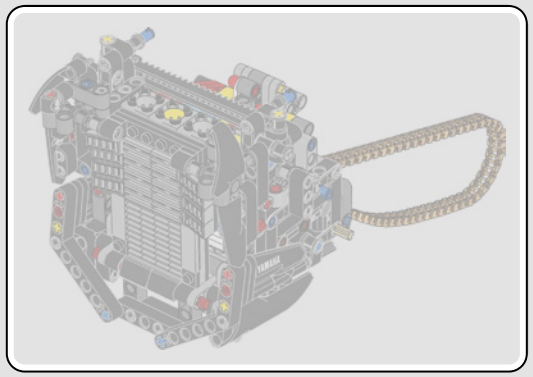

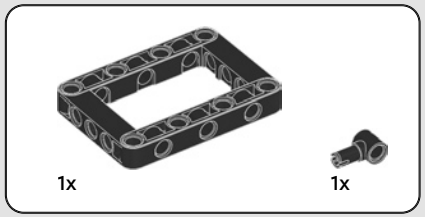

133

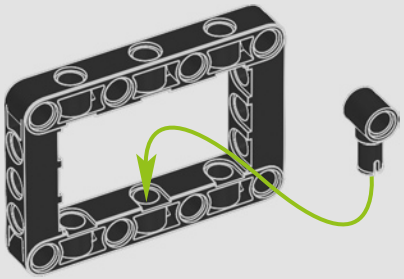

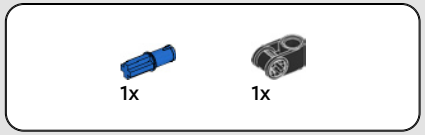

134

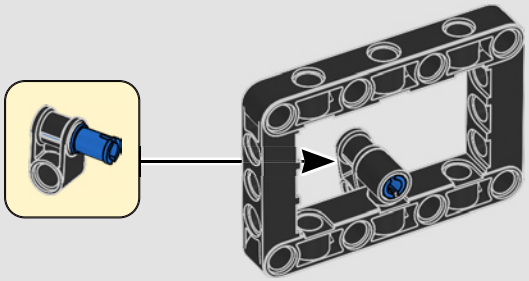

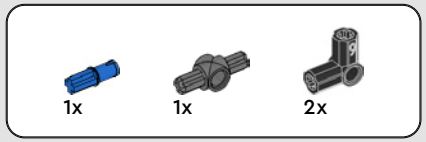

135

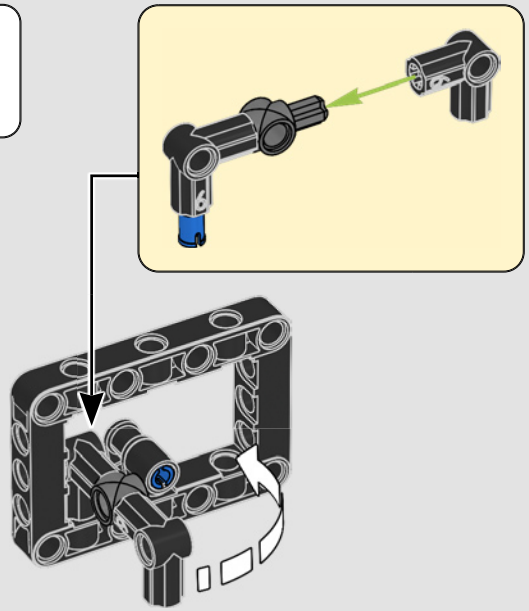

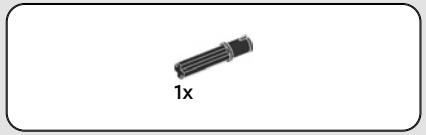

136

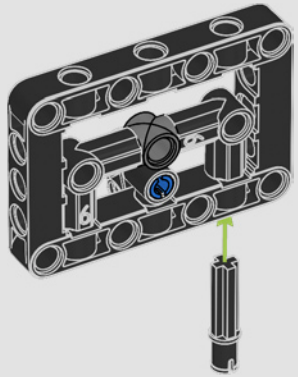

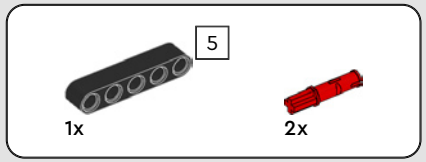

137

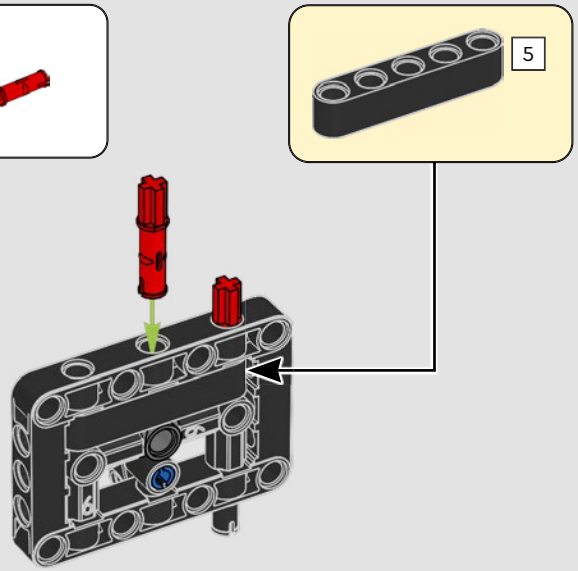

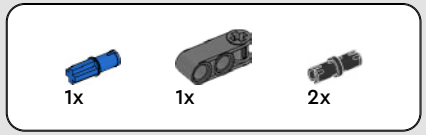

138

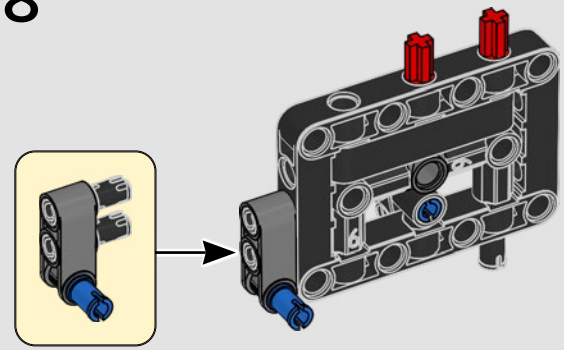

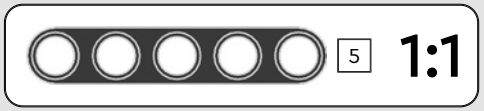

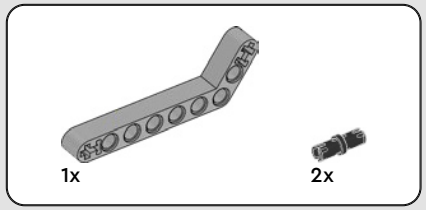

139

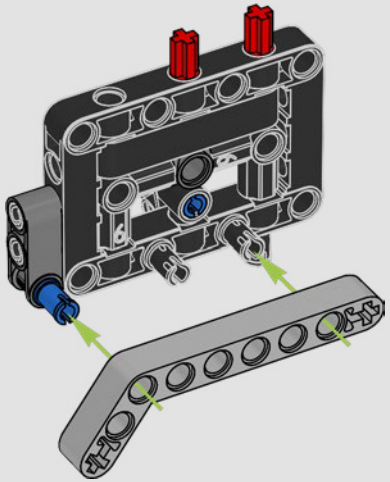

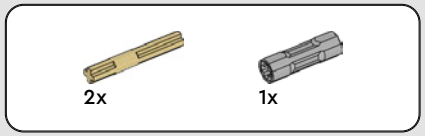

140

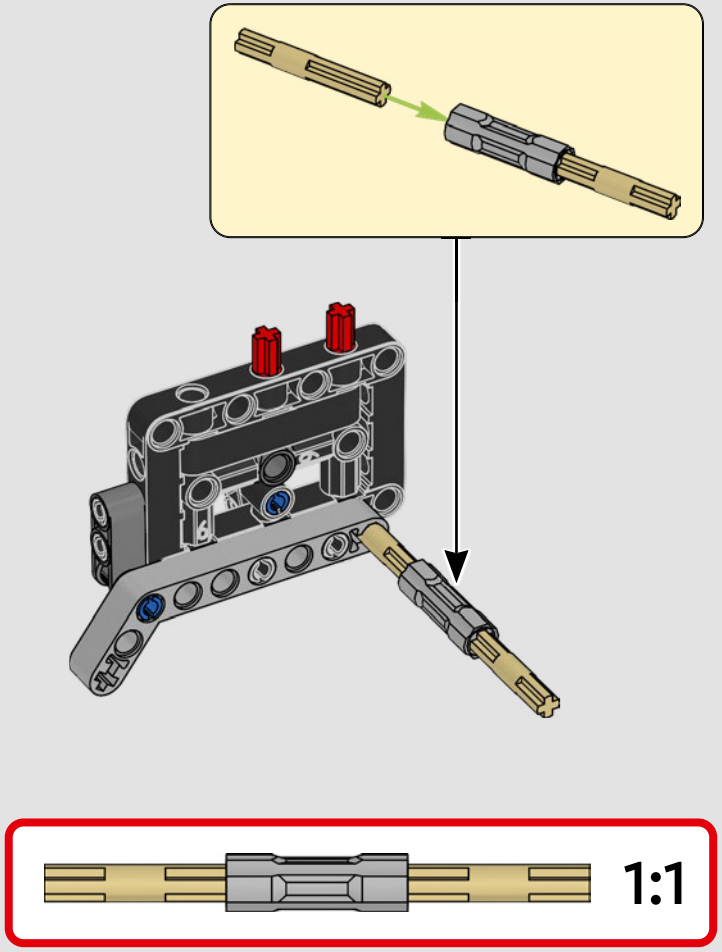

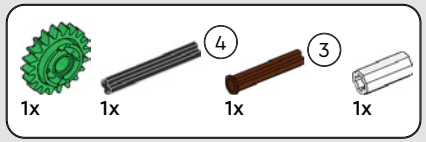

141

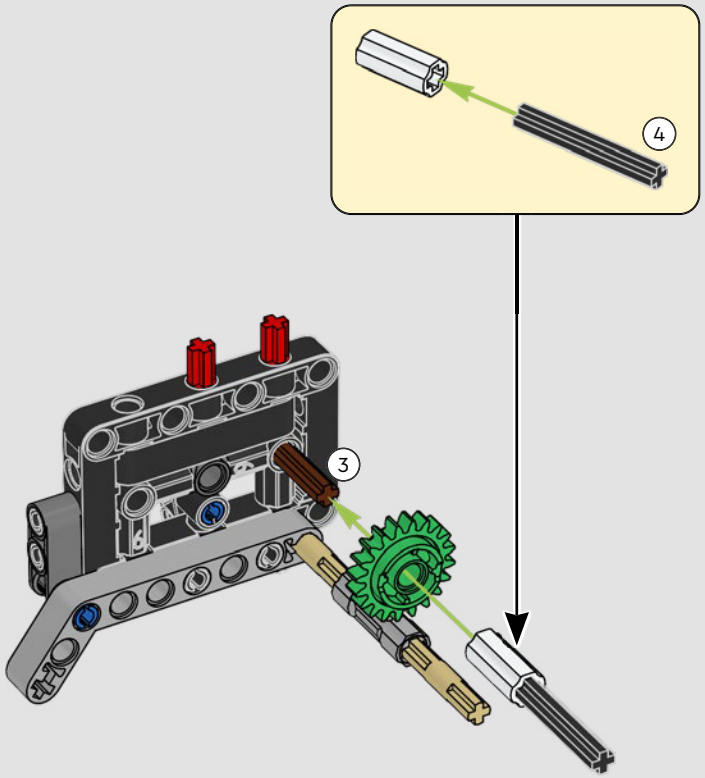

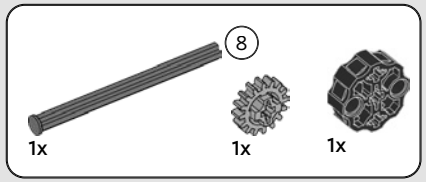

142

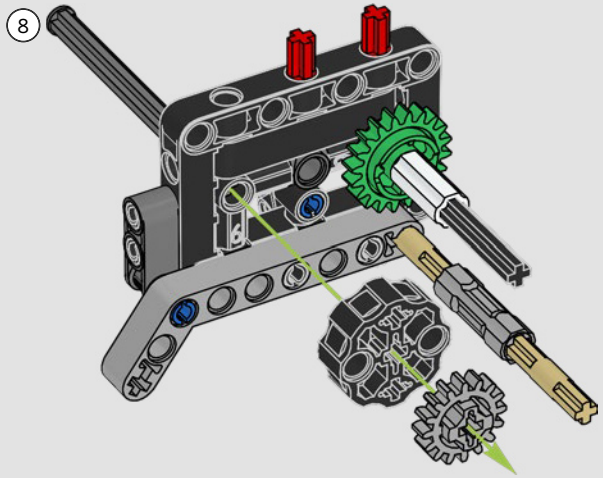

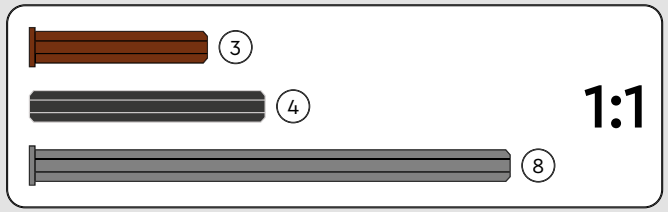

64x

143

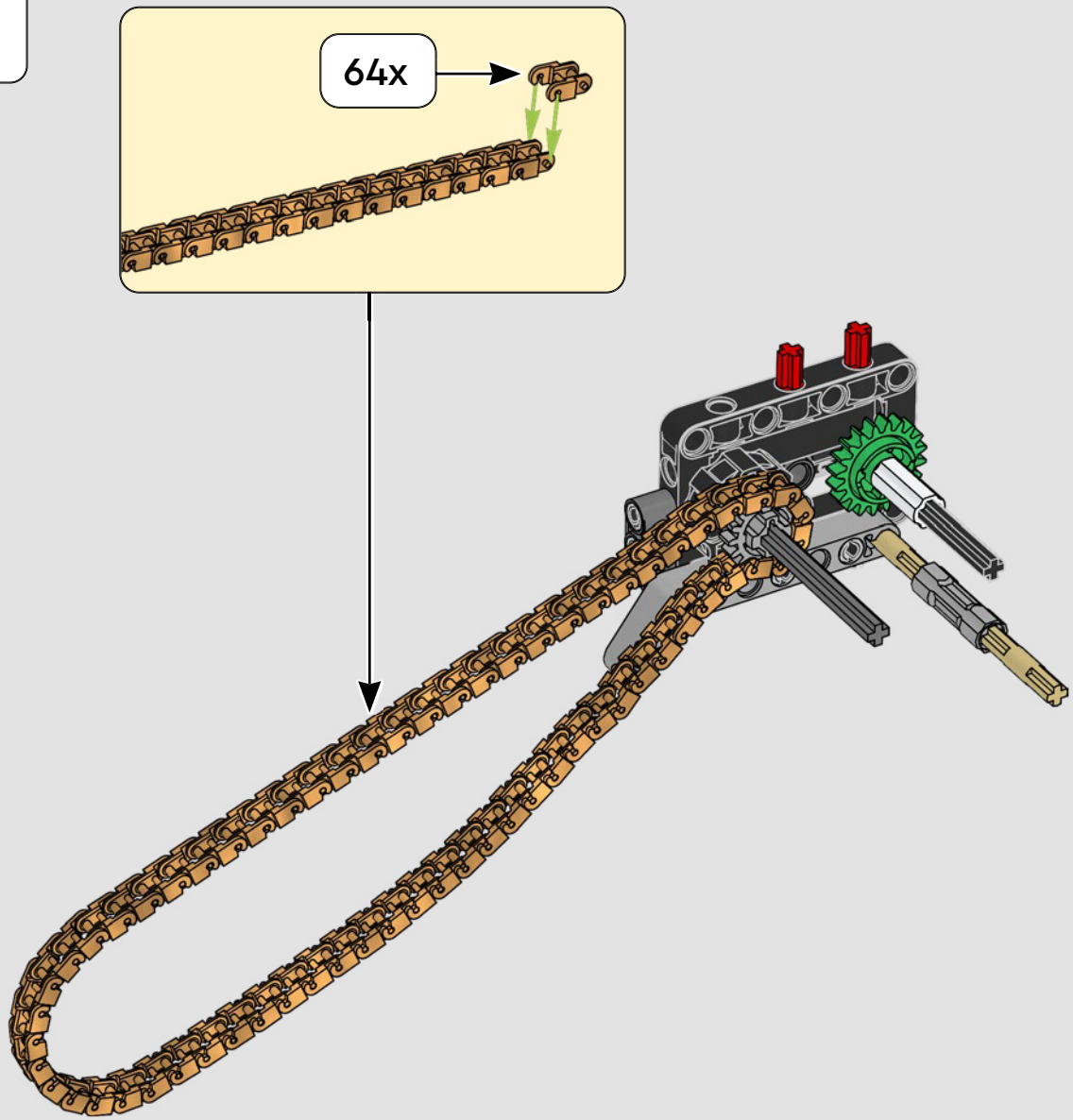

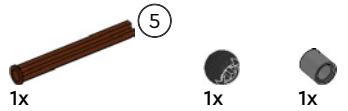

144

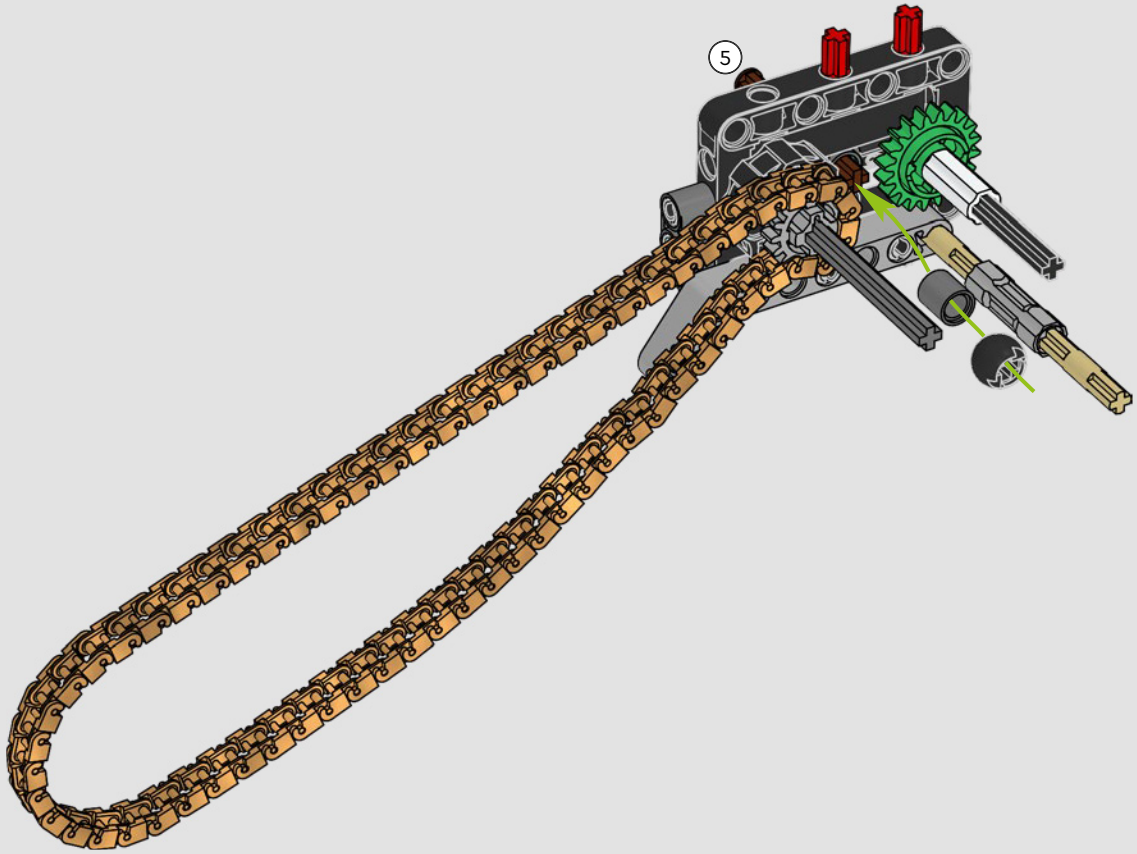

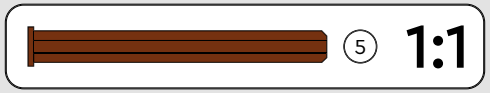

145

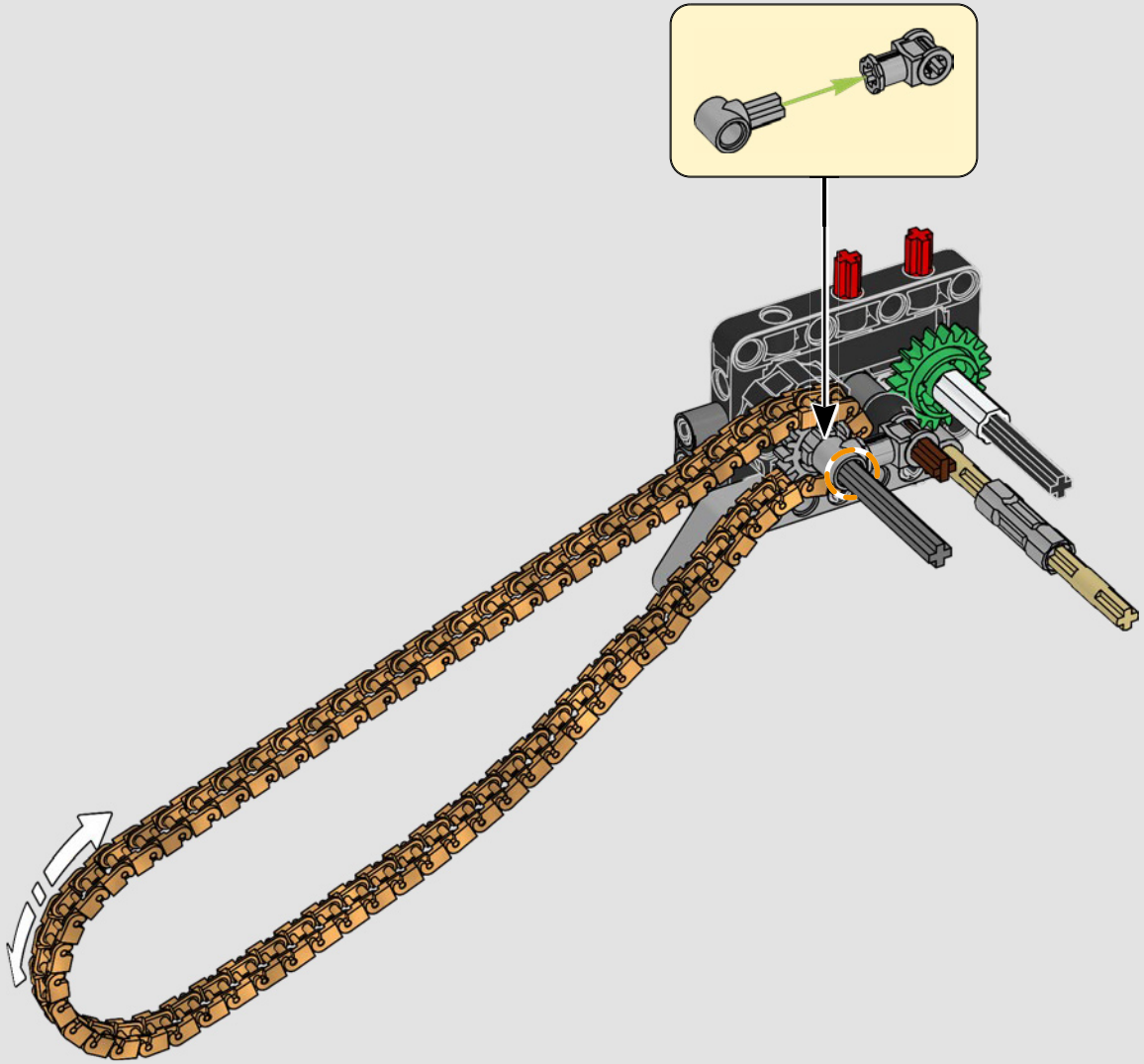

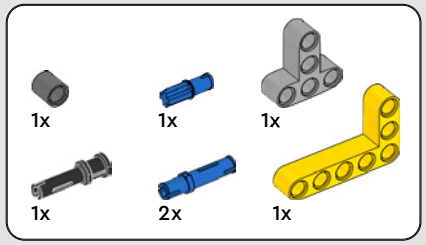

146

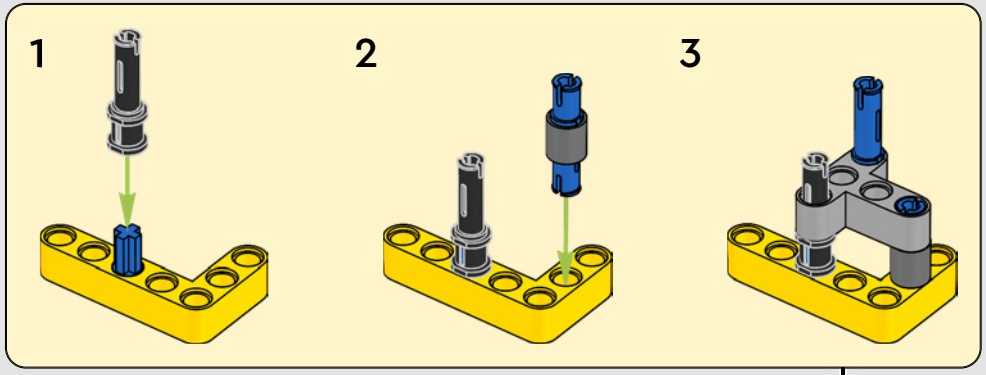

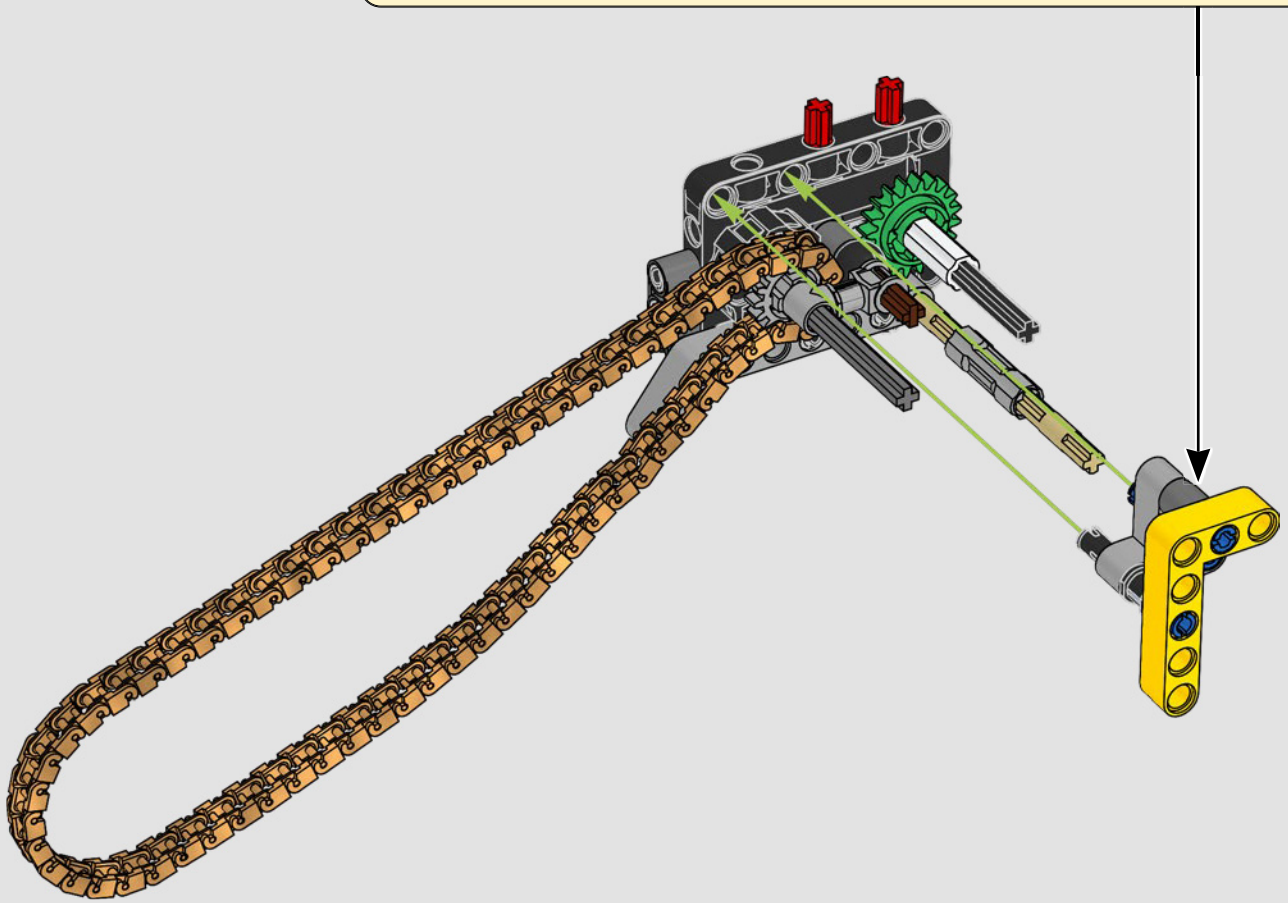

1x

147

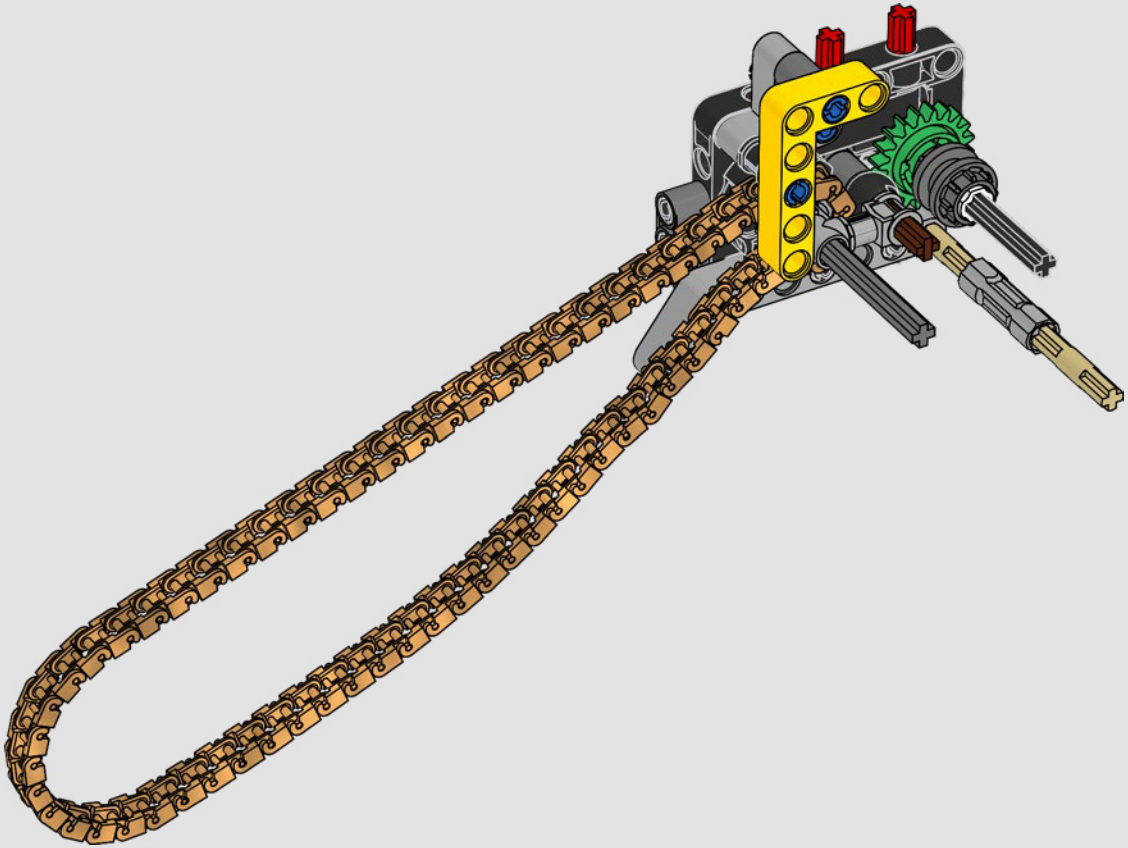

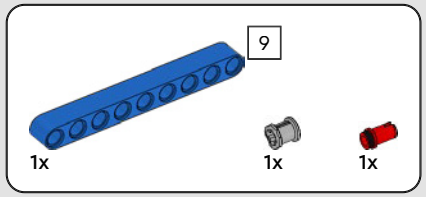

148

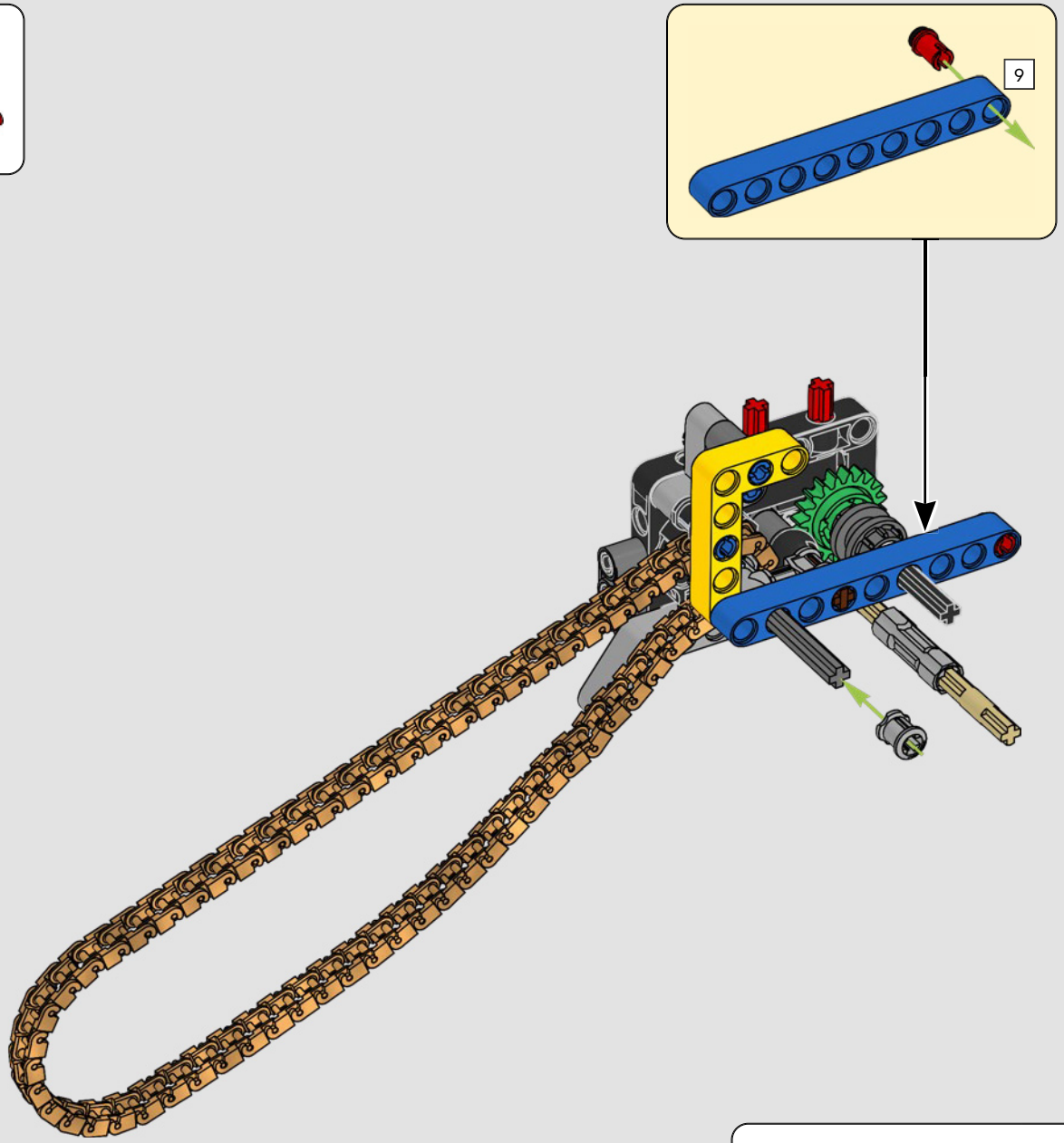

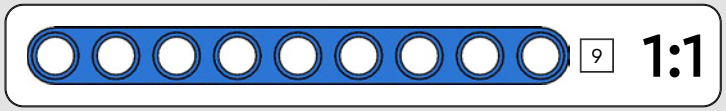

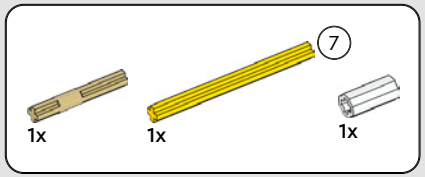

149

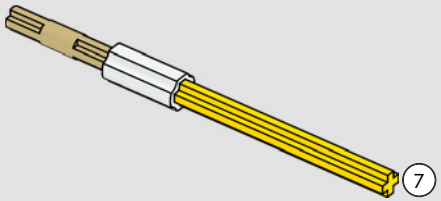

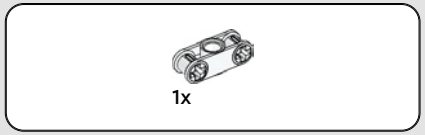

150

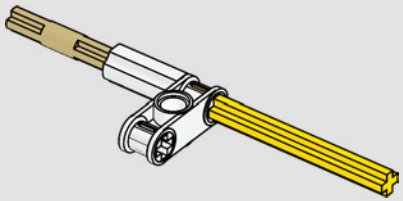

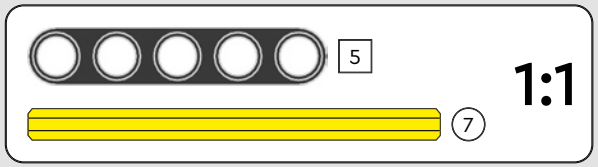

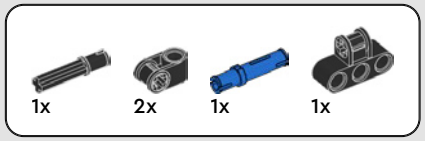

151

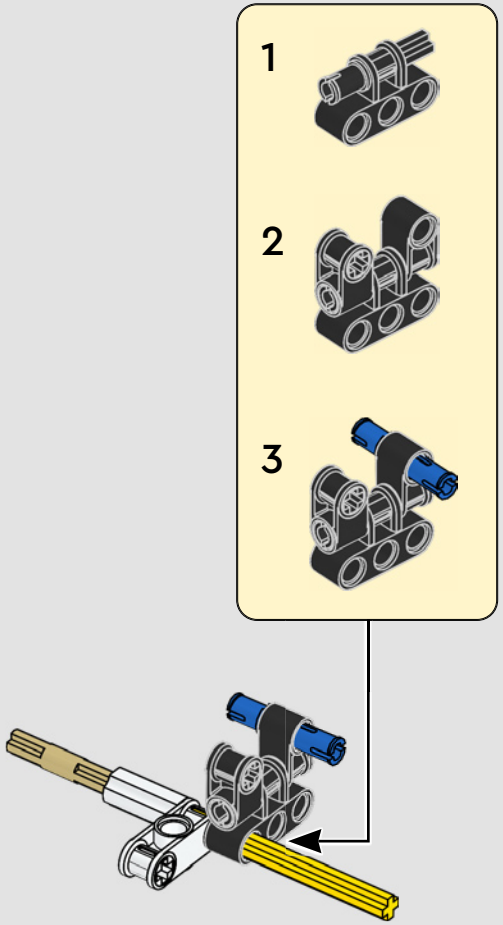

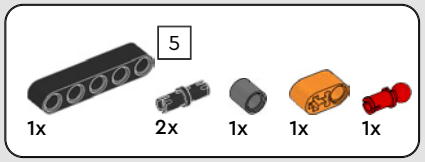

152

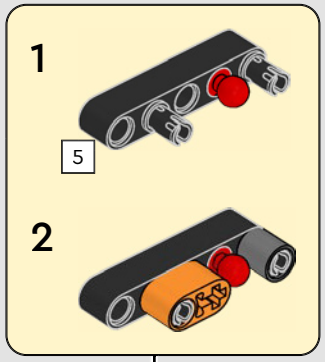

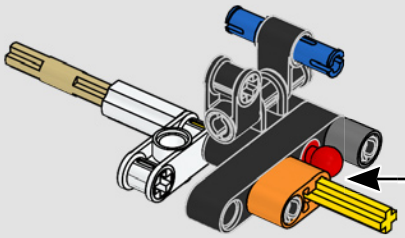

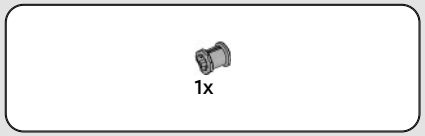

153

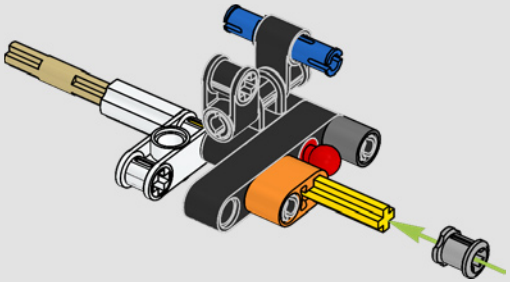

154

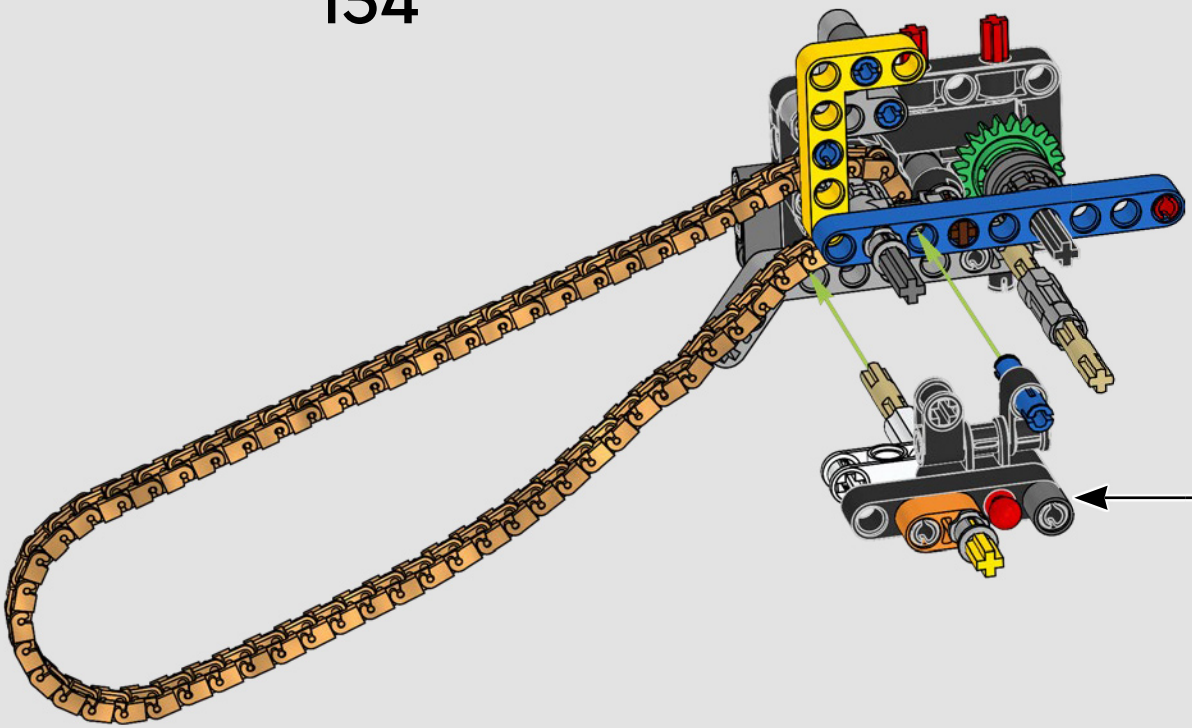

1x

155

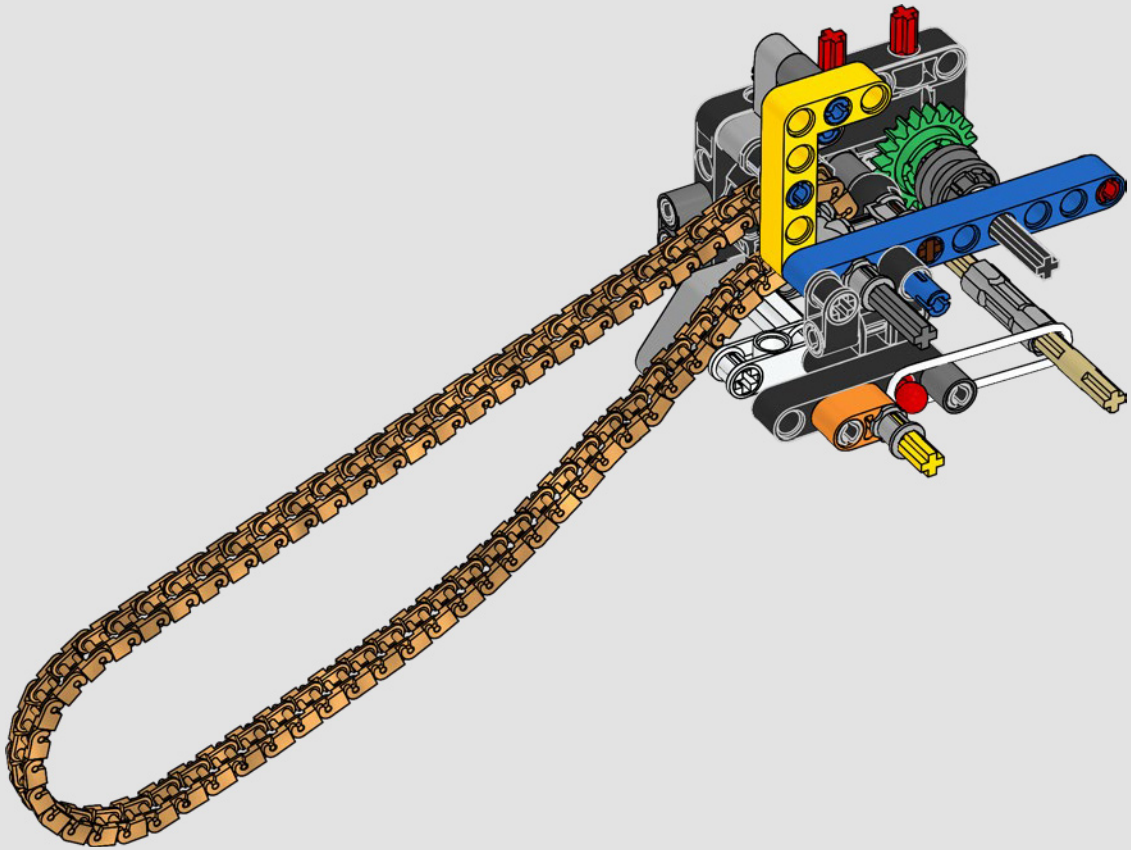

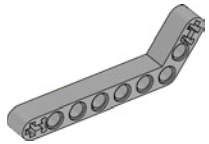

156

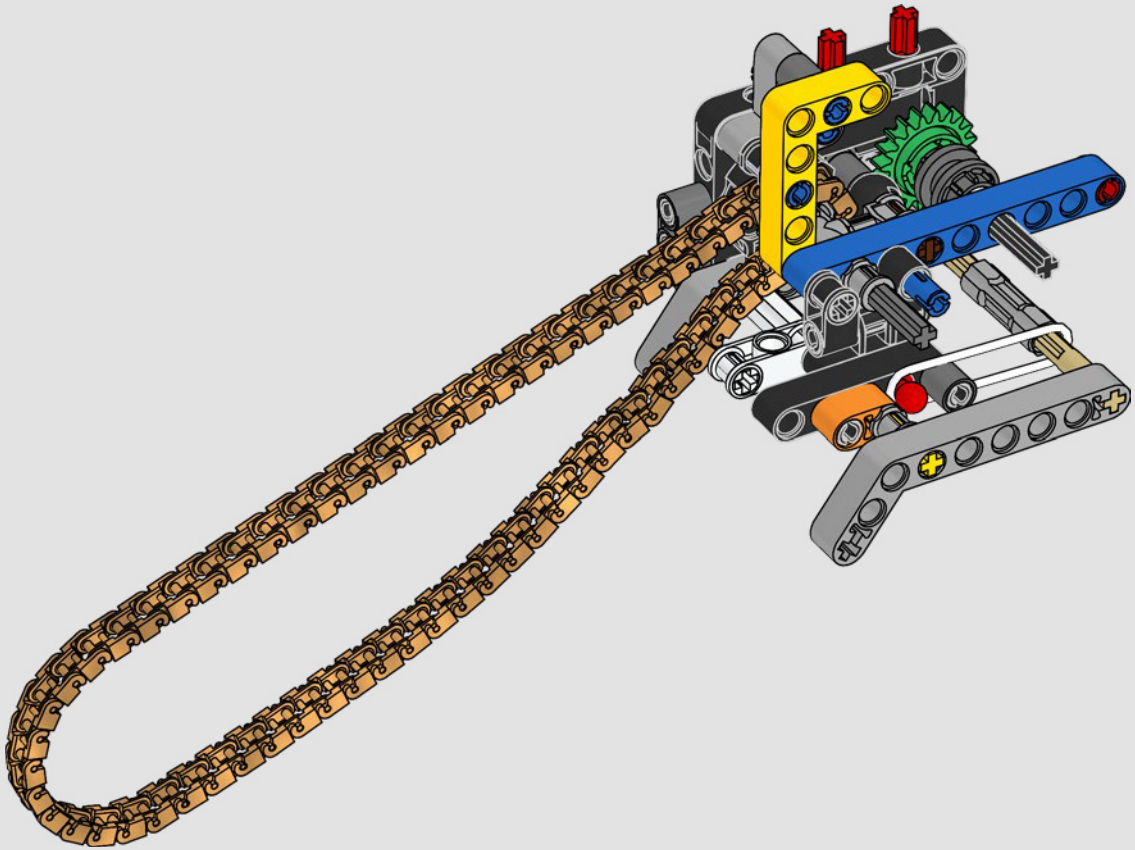

157

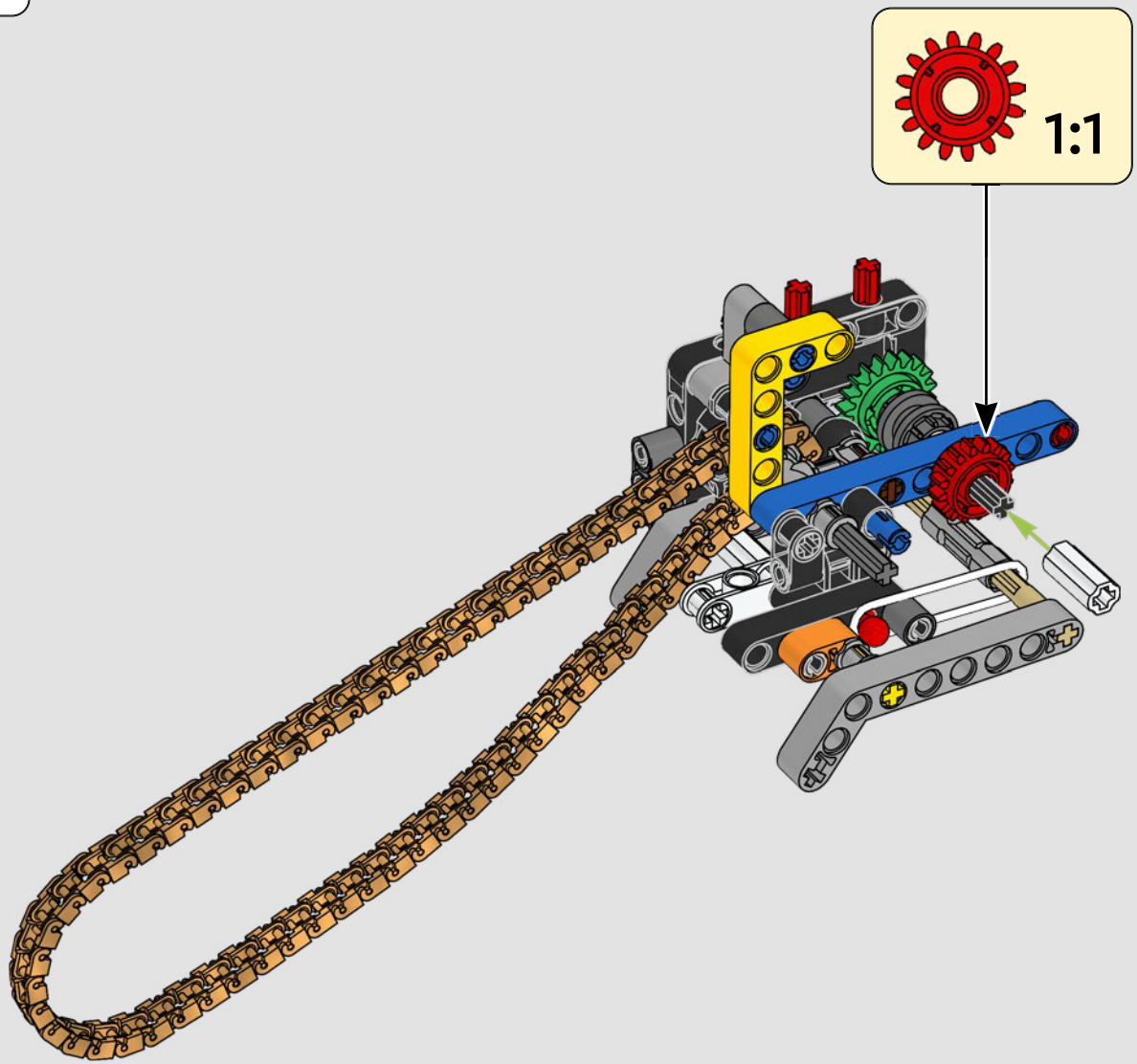

1x

158

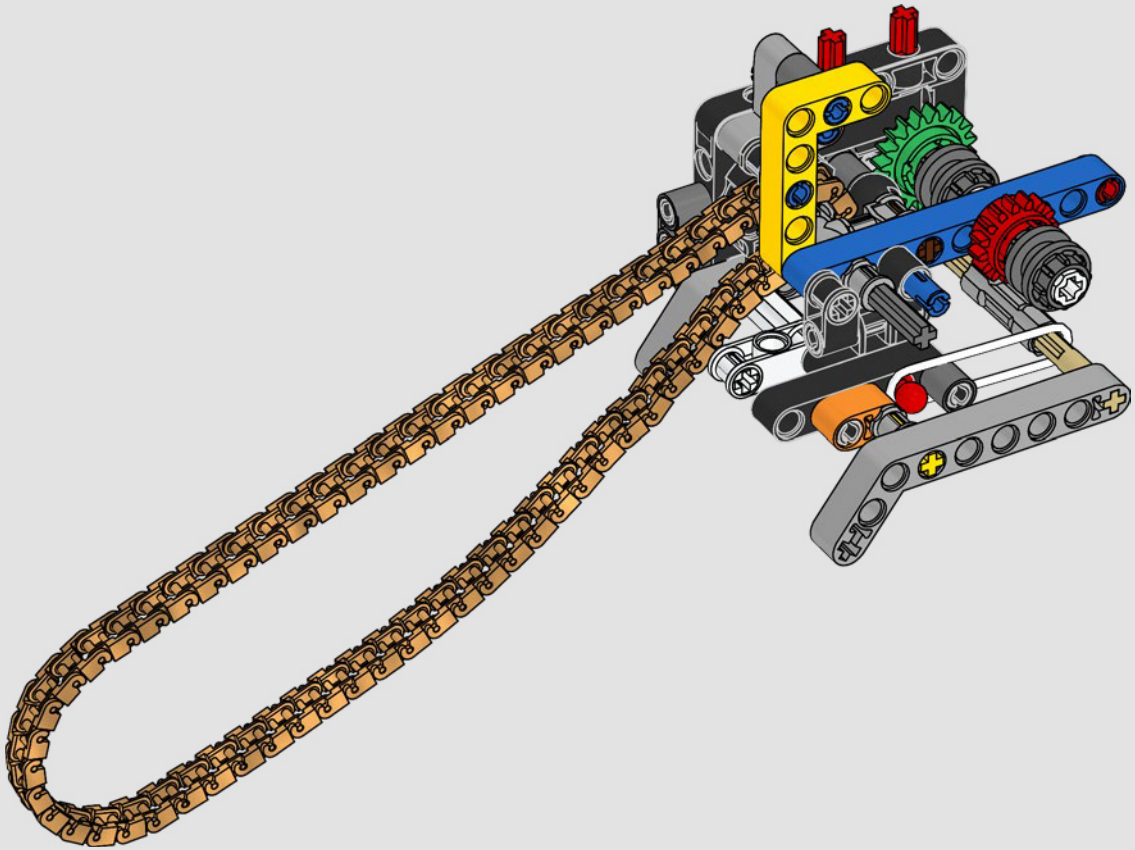

159

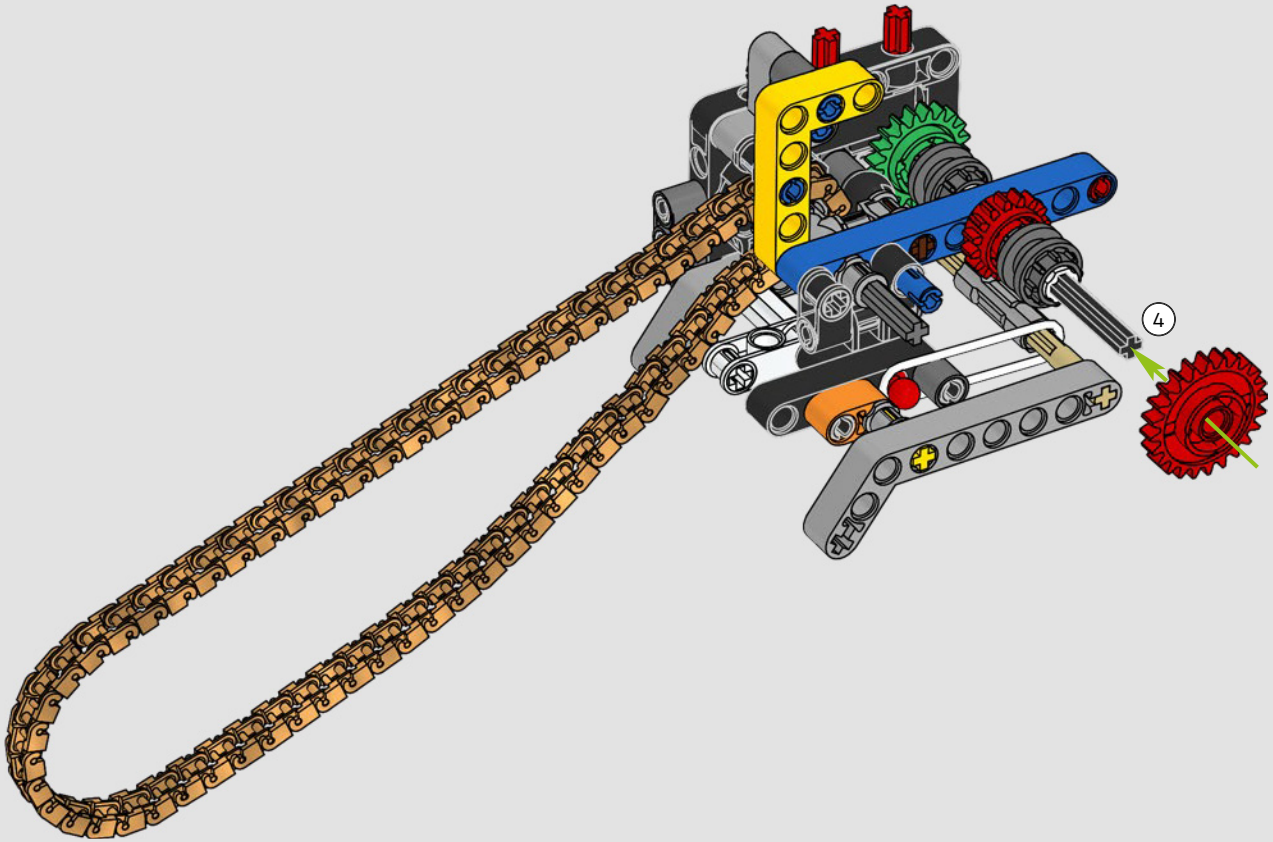

4 1:1

1x

160

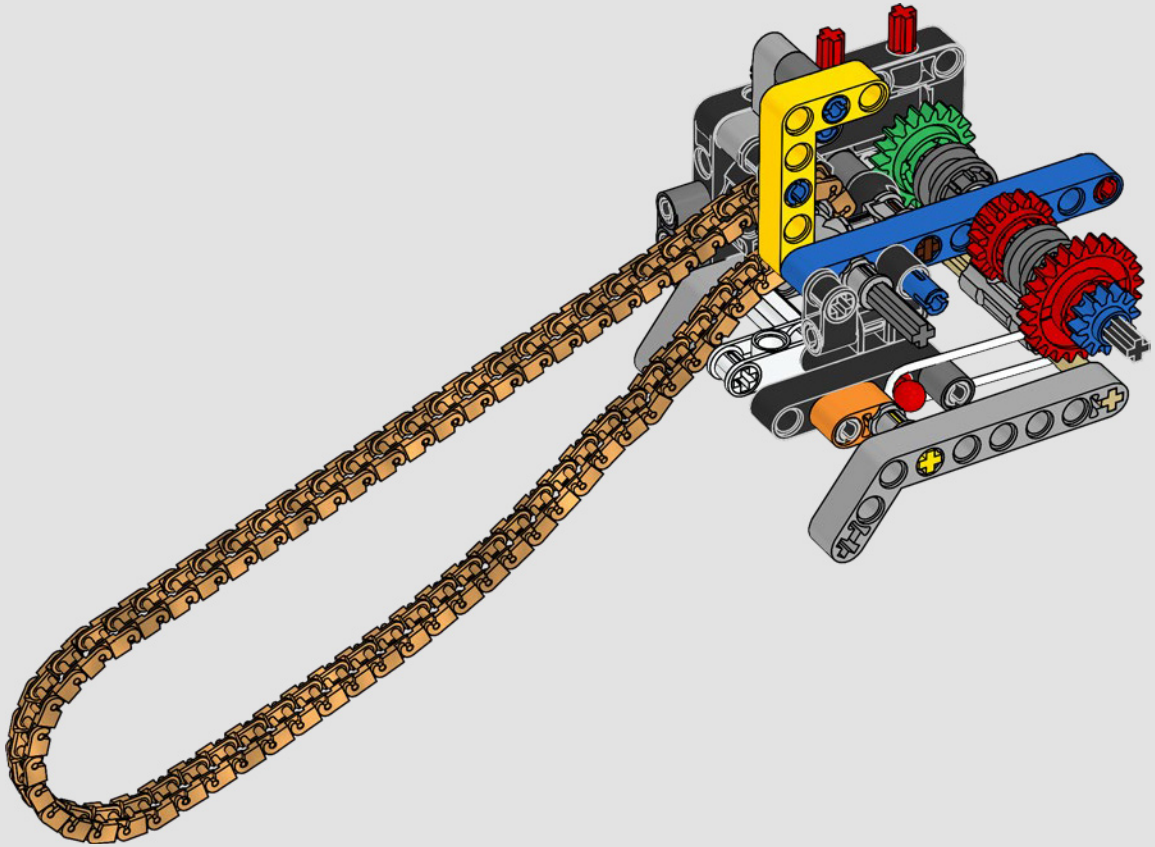

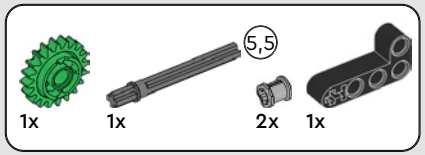

161

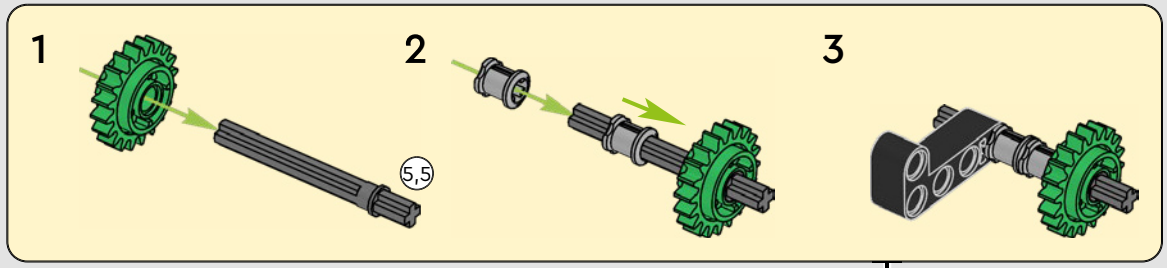

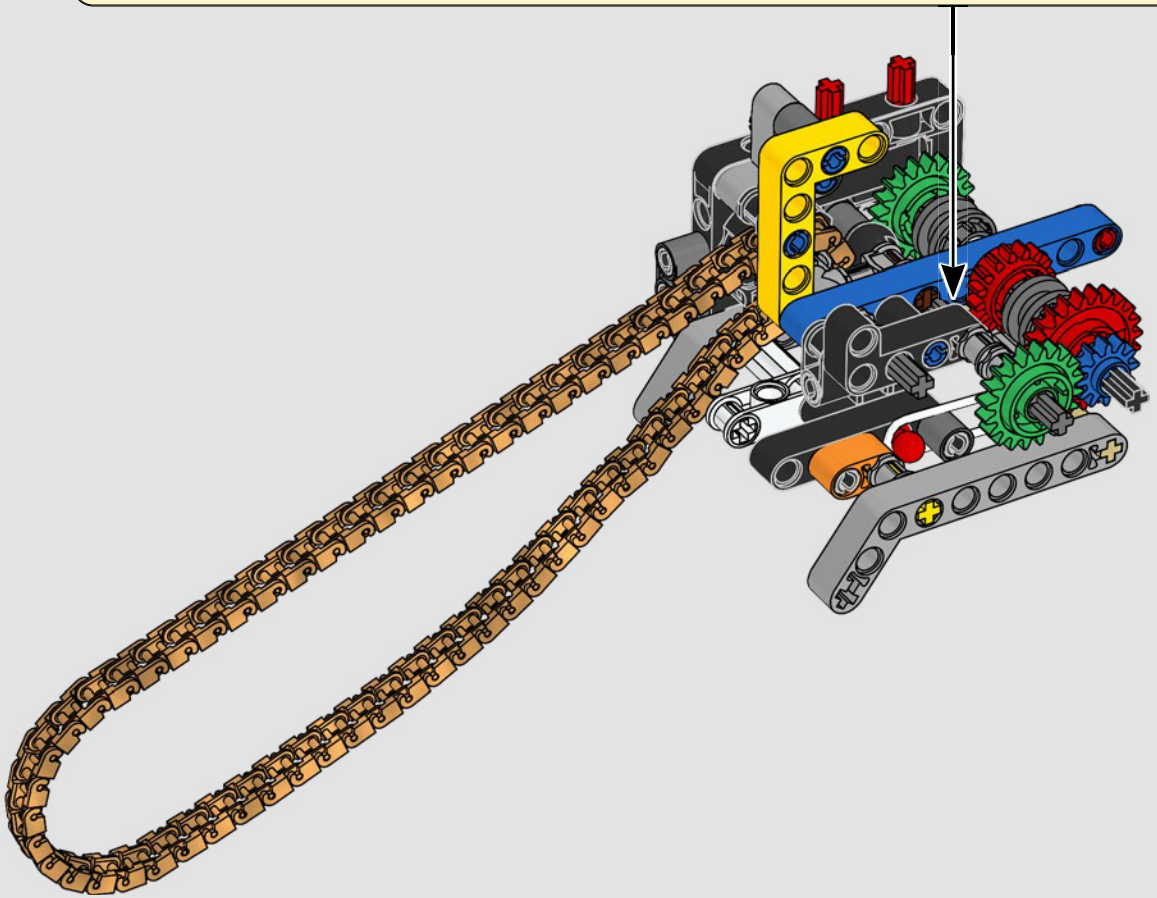

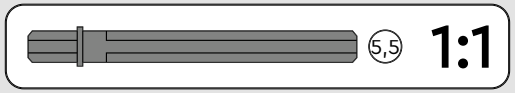

162

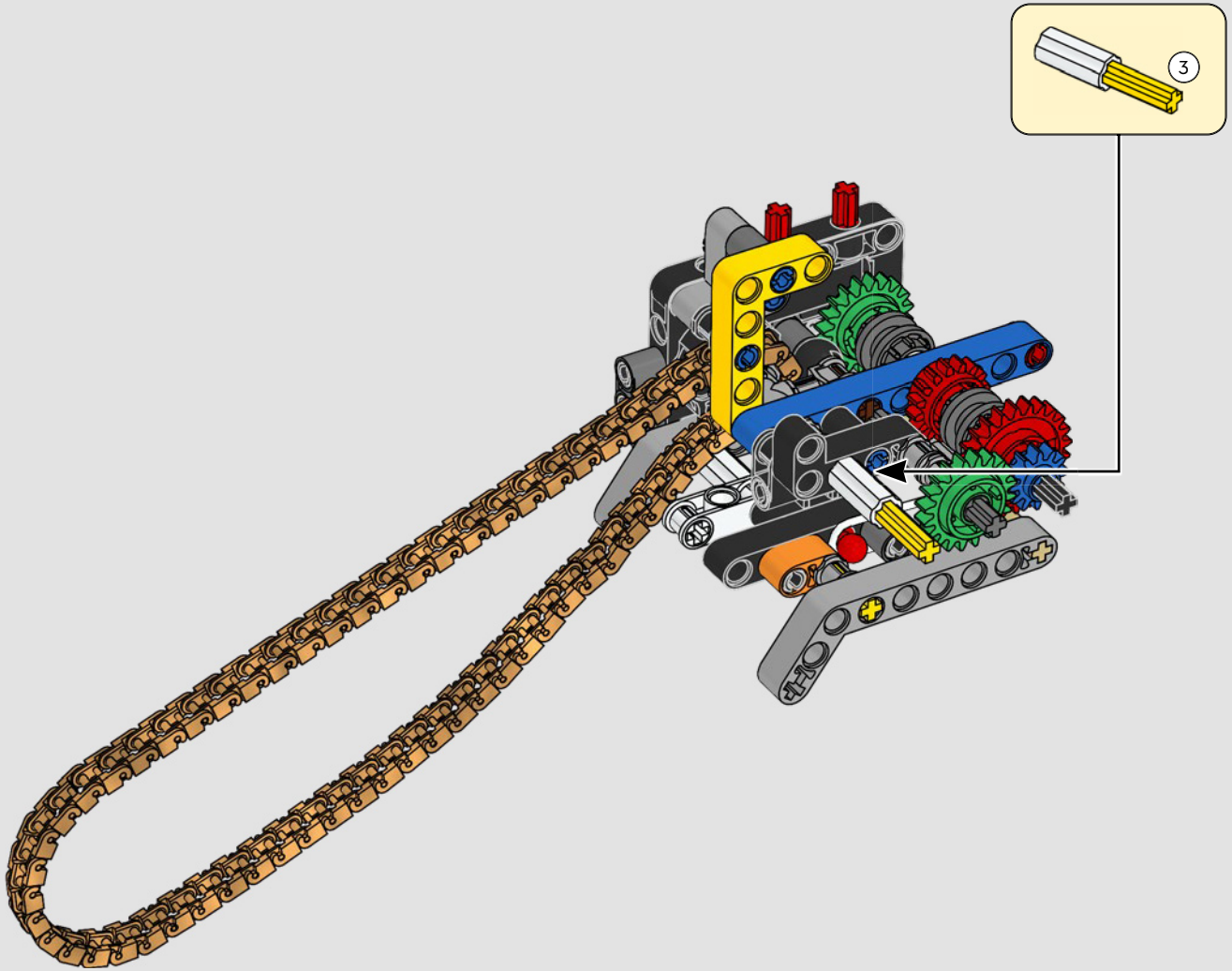

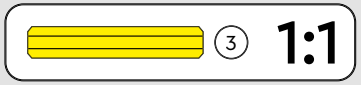

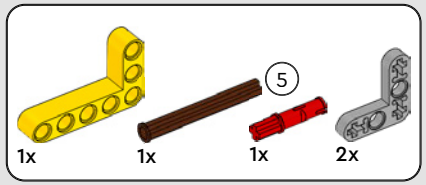

163

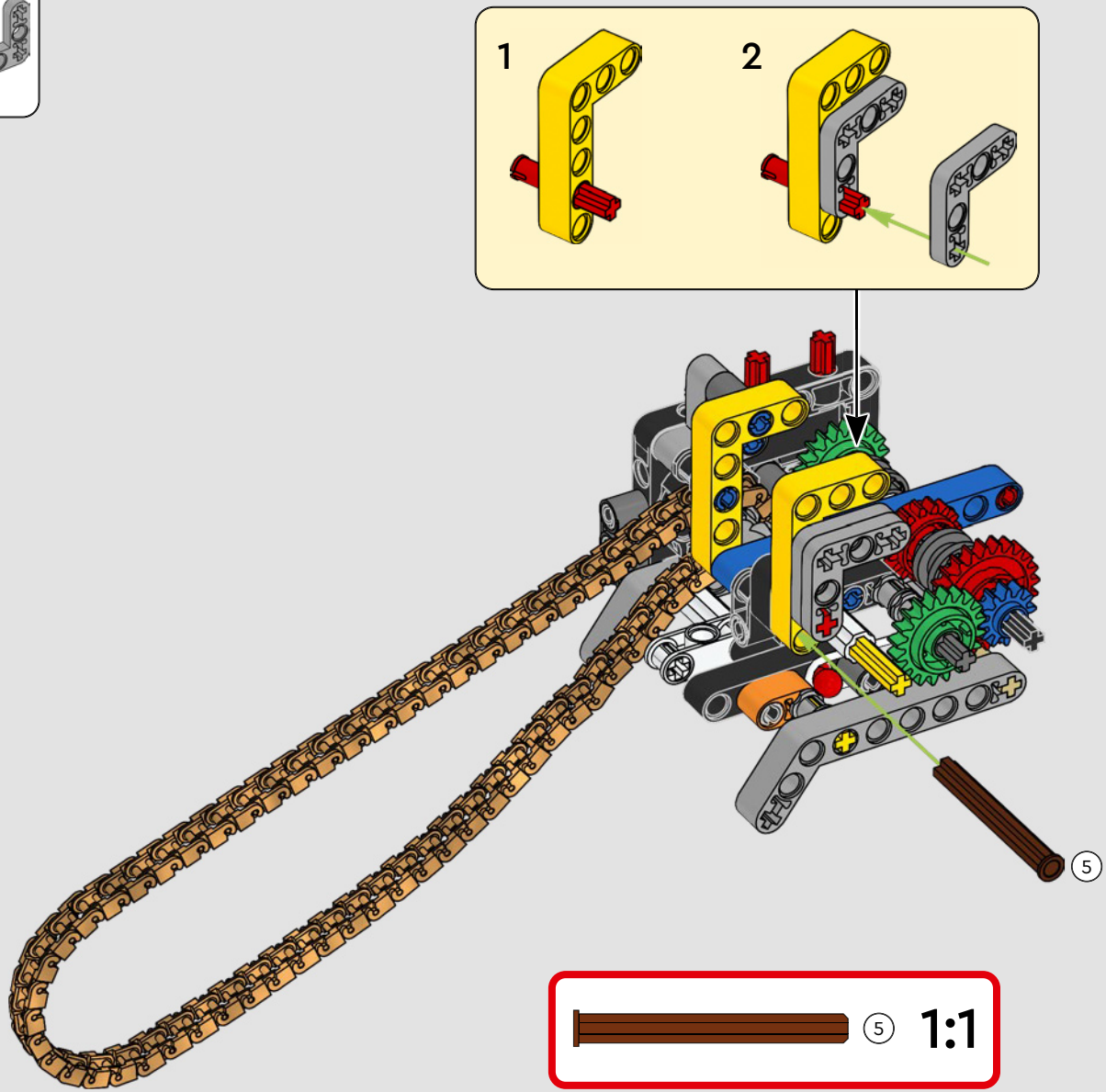

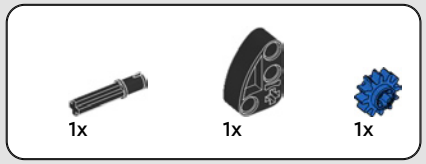

164

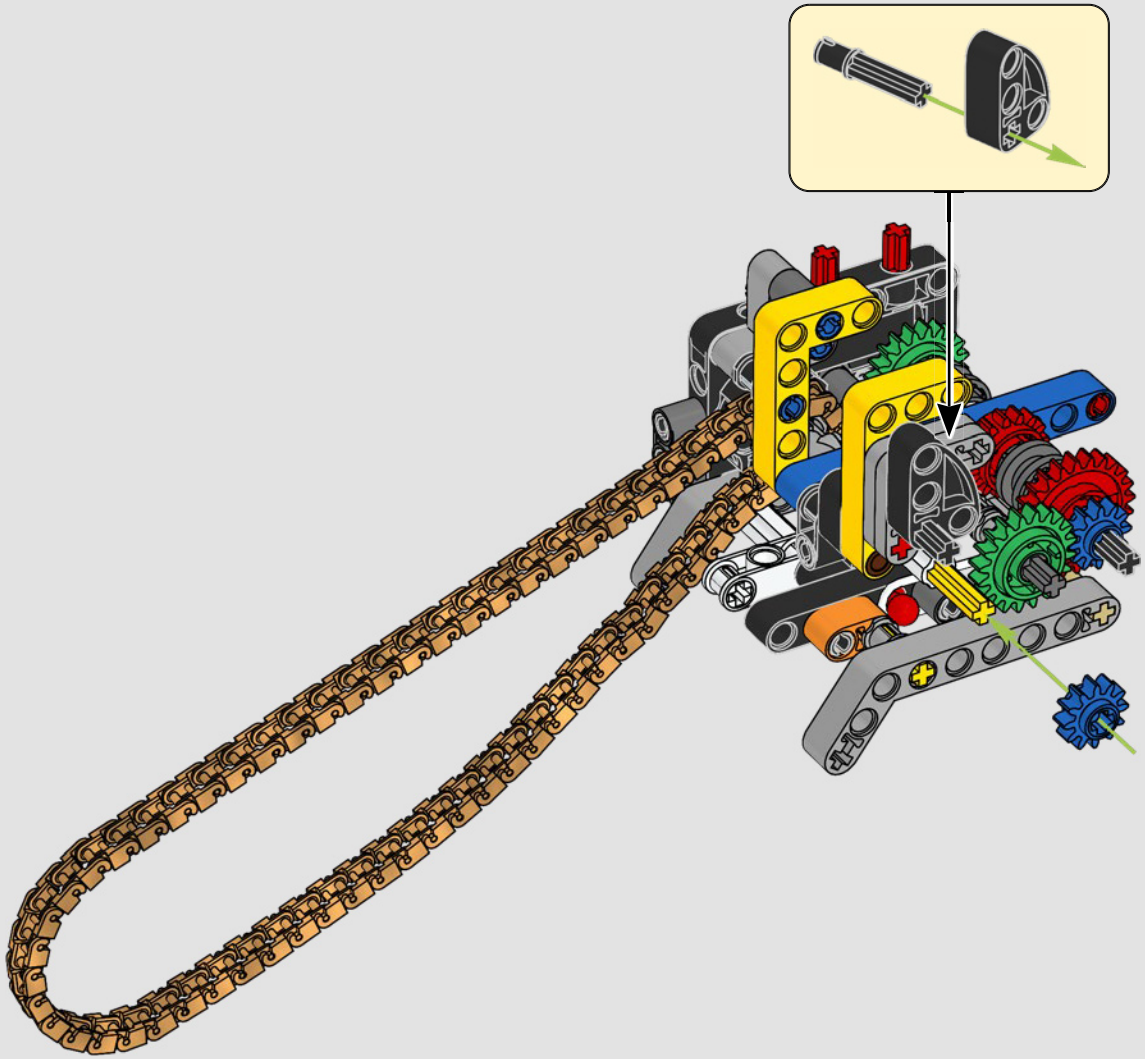

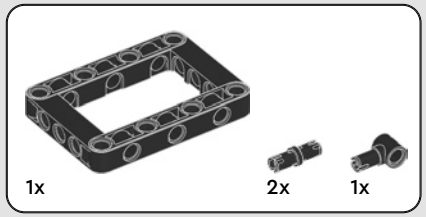

165

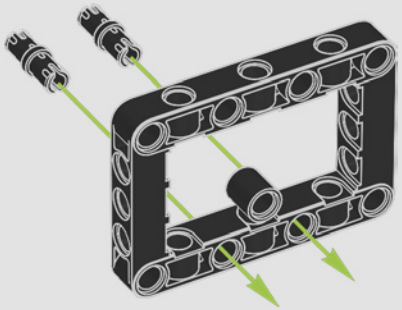

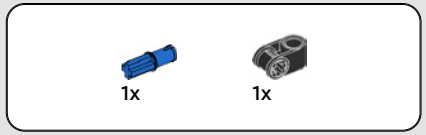

166

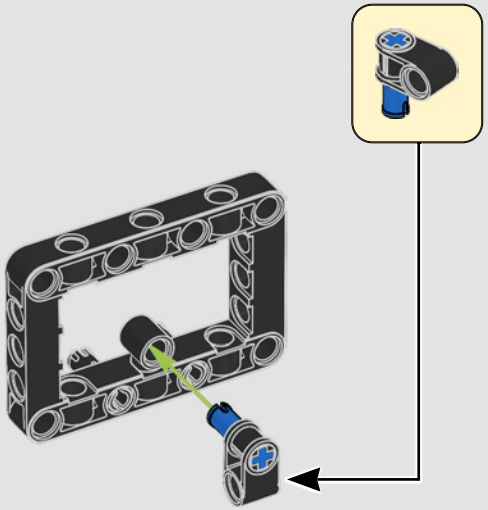

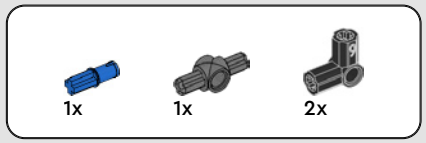

167

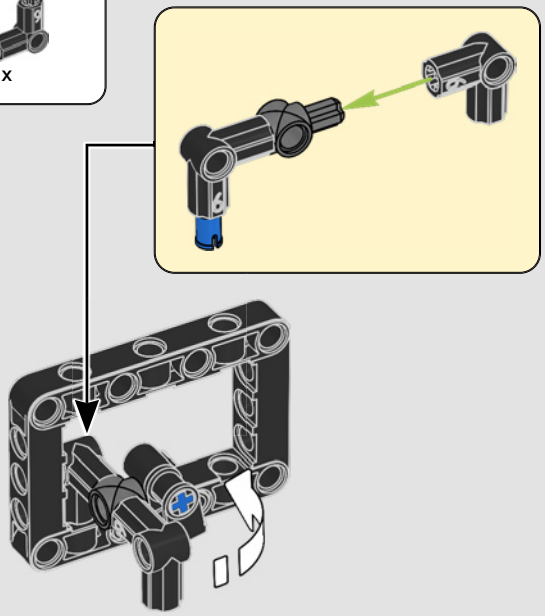

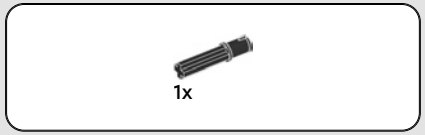

168

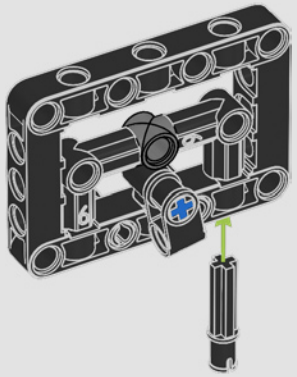

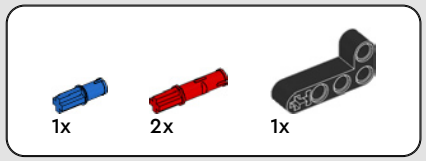

169

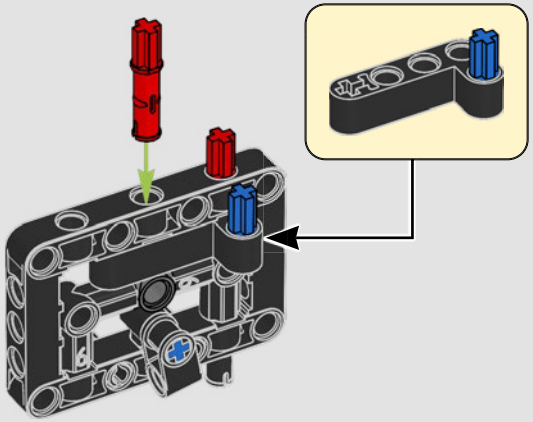

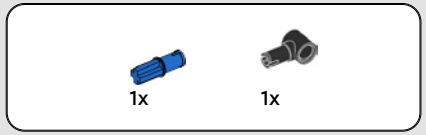

170

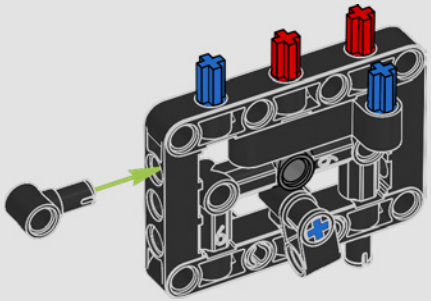

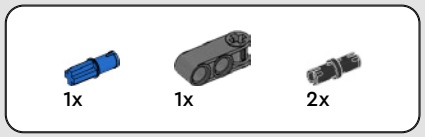

171

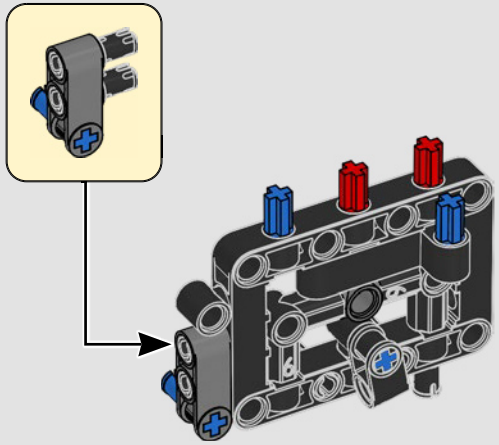

172

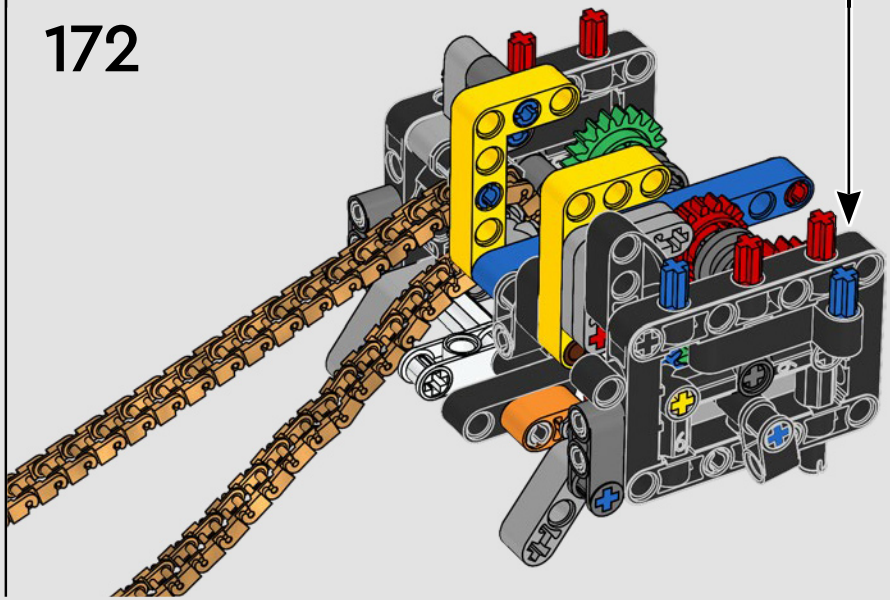

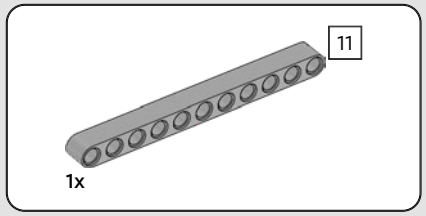

173

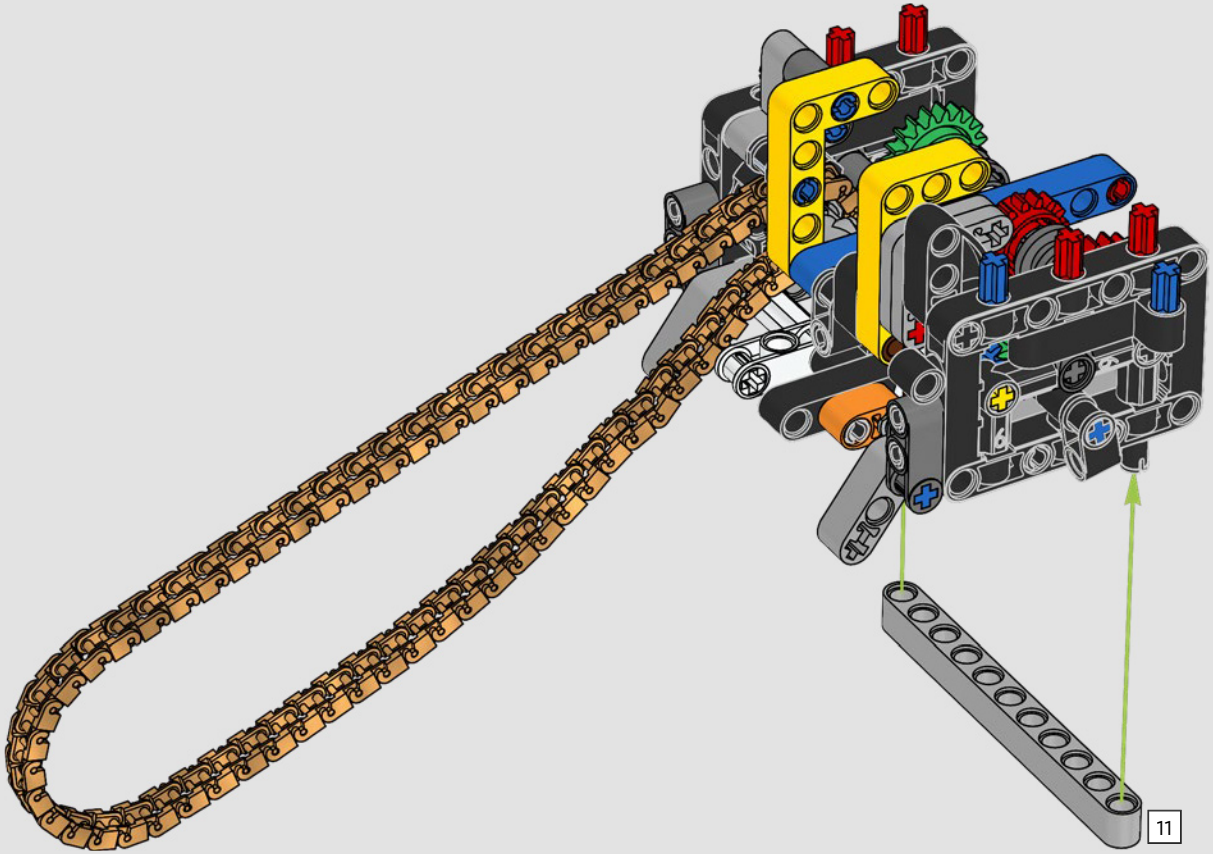

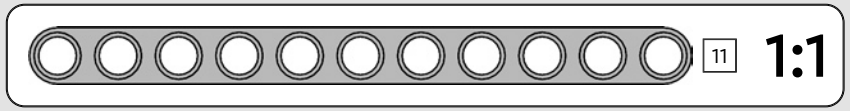

2x

174

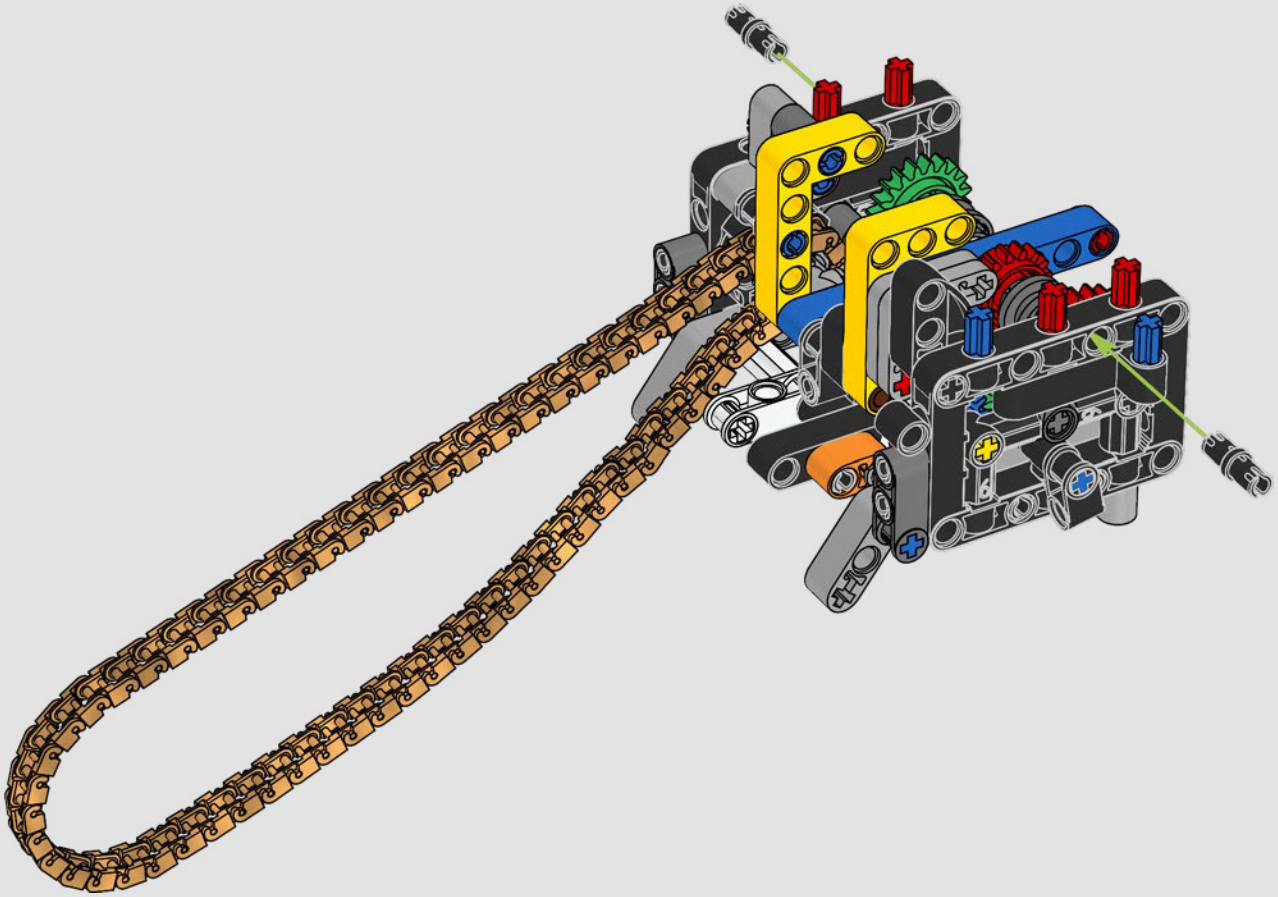

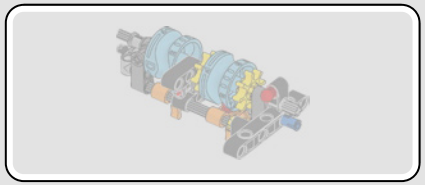

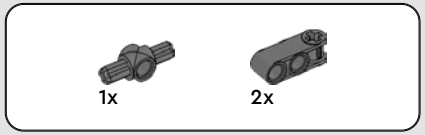

175

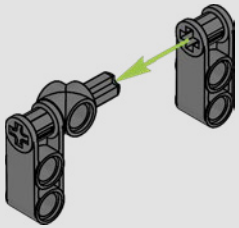

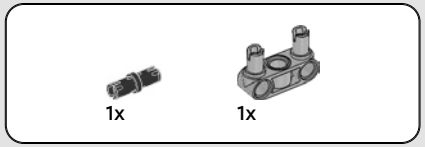

176

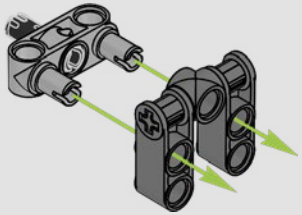

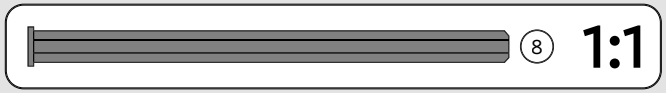

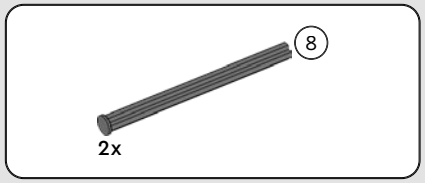

177

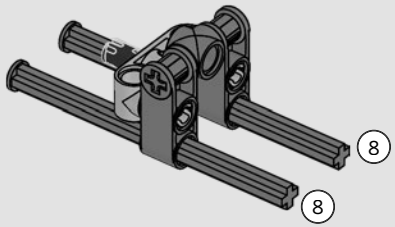

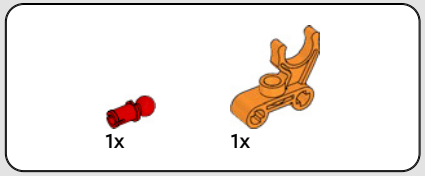

178

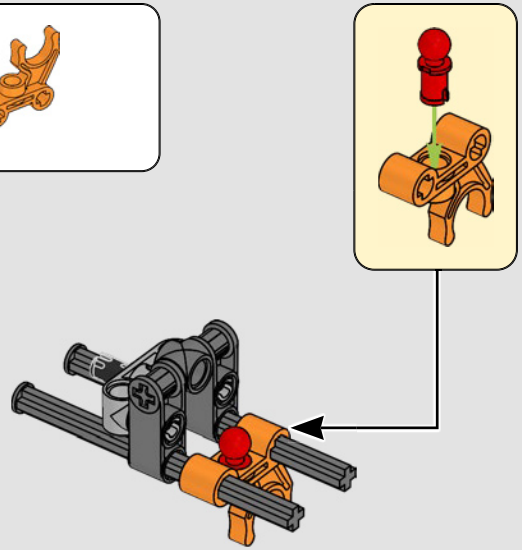

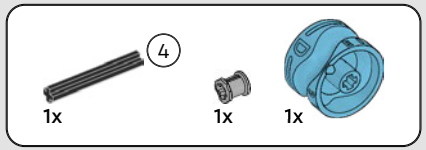

179

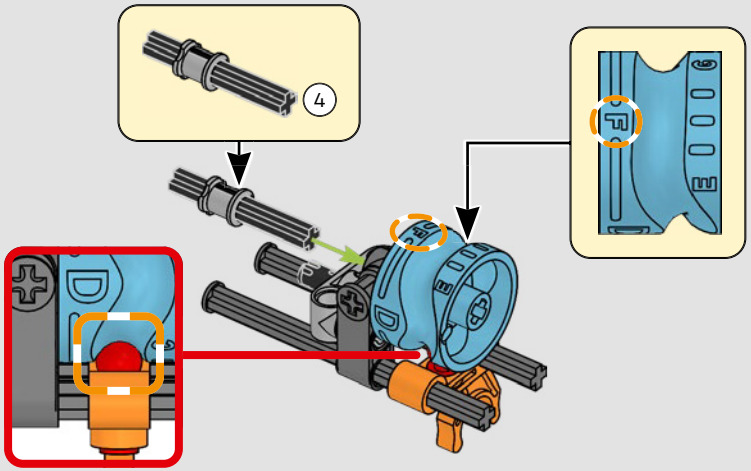

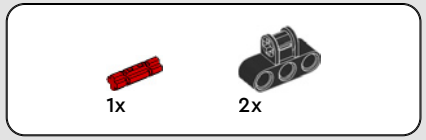

180

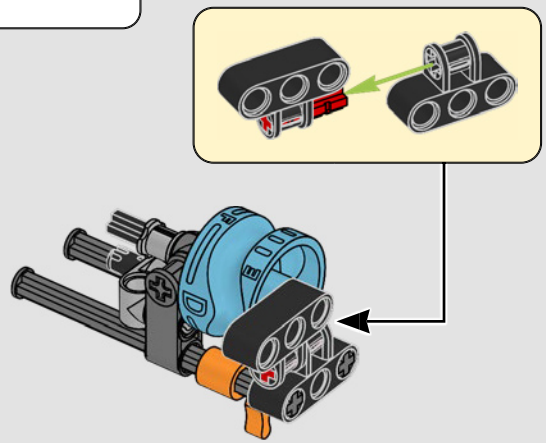

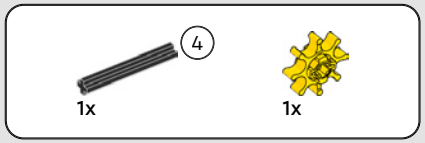

181

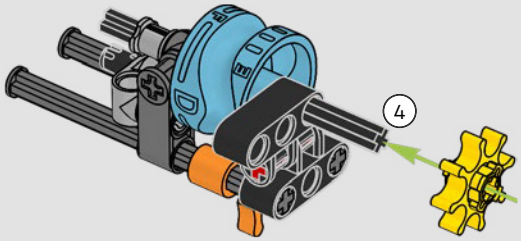

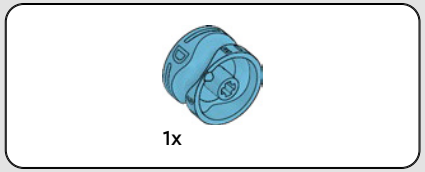

182

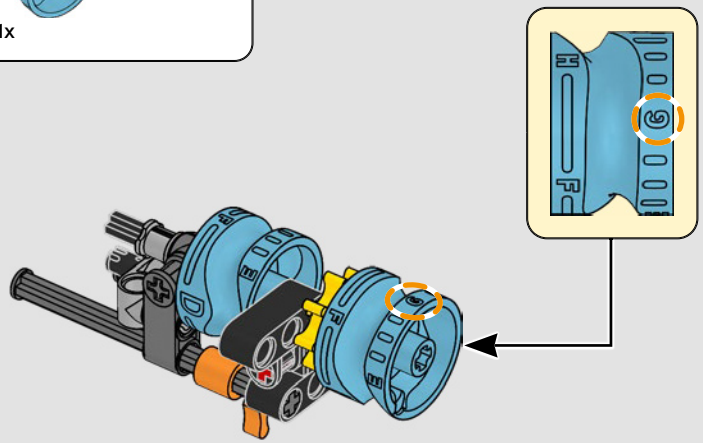

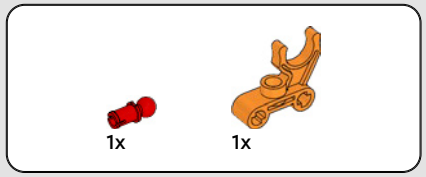

183

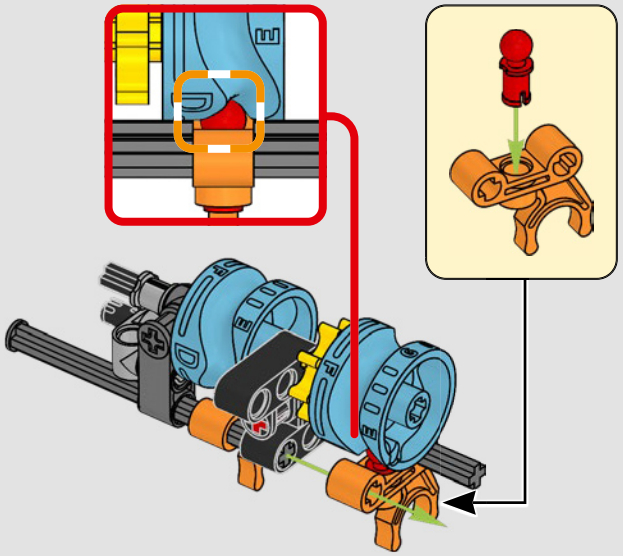

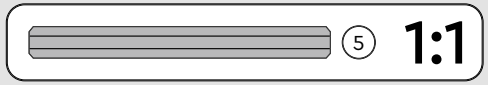

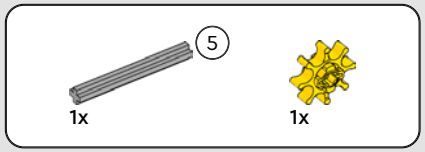

184

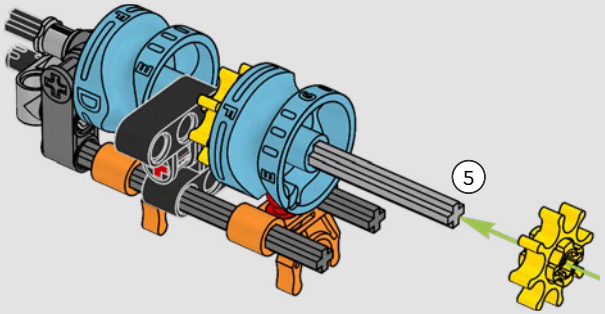

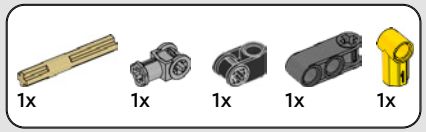

185

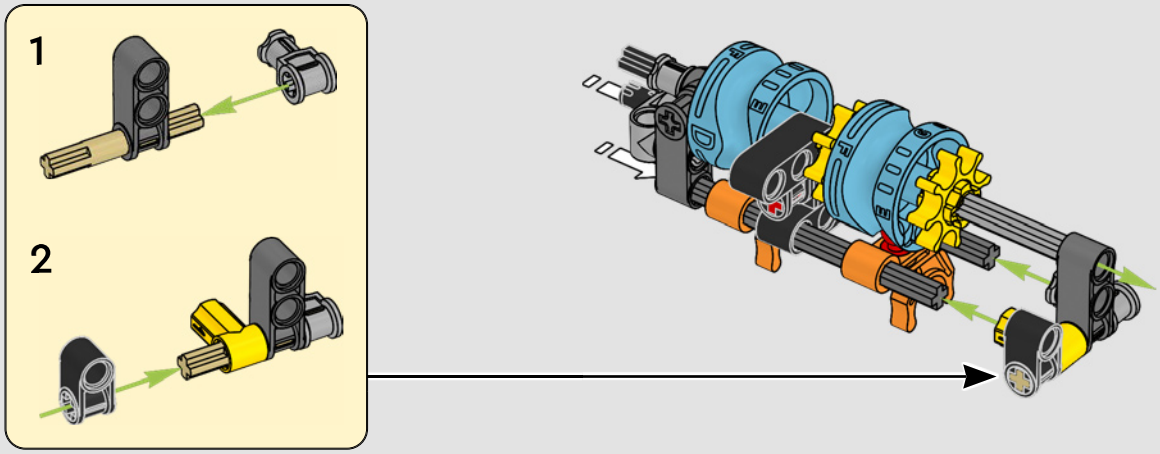

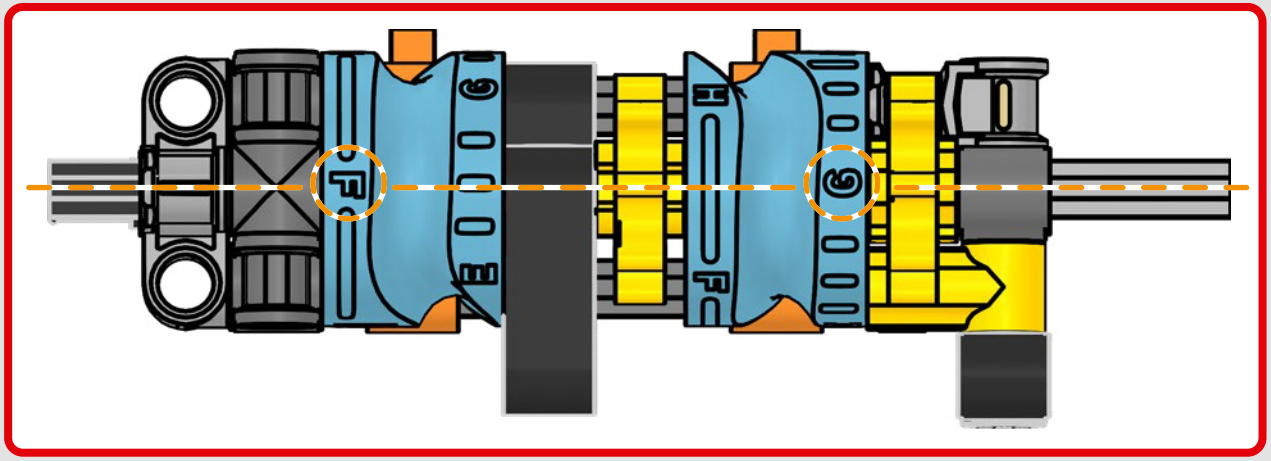

186

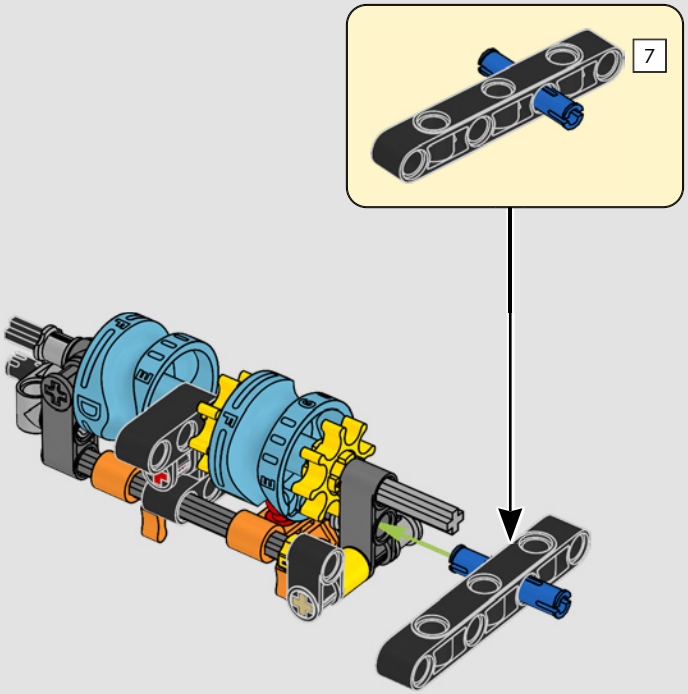

1:1

187

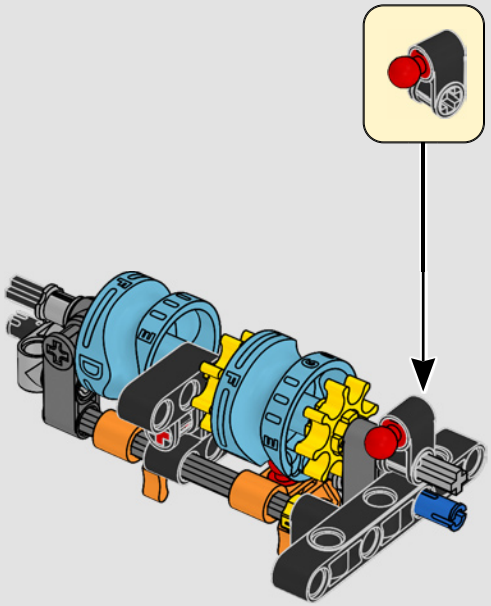

188

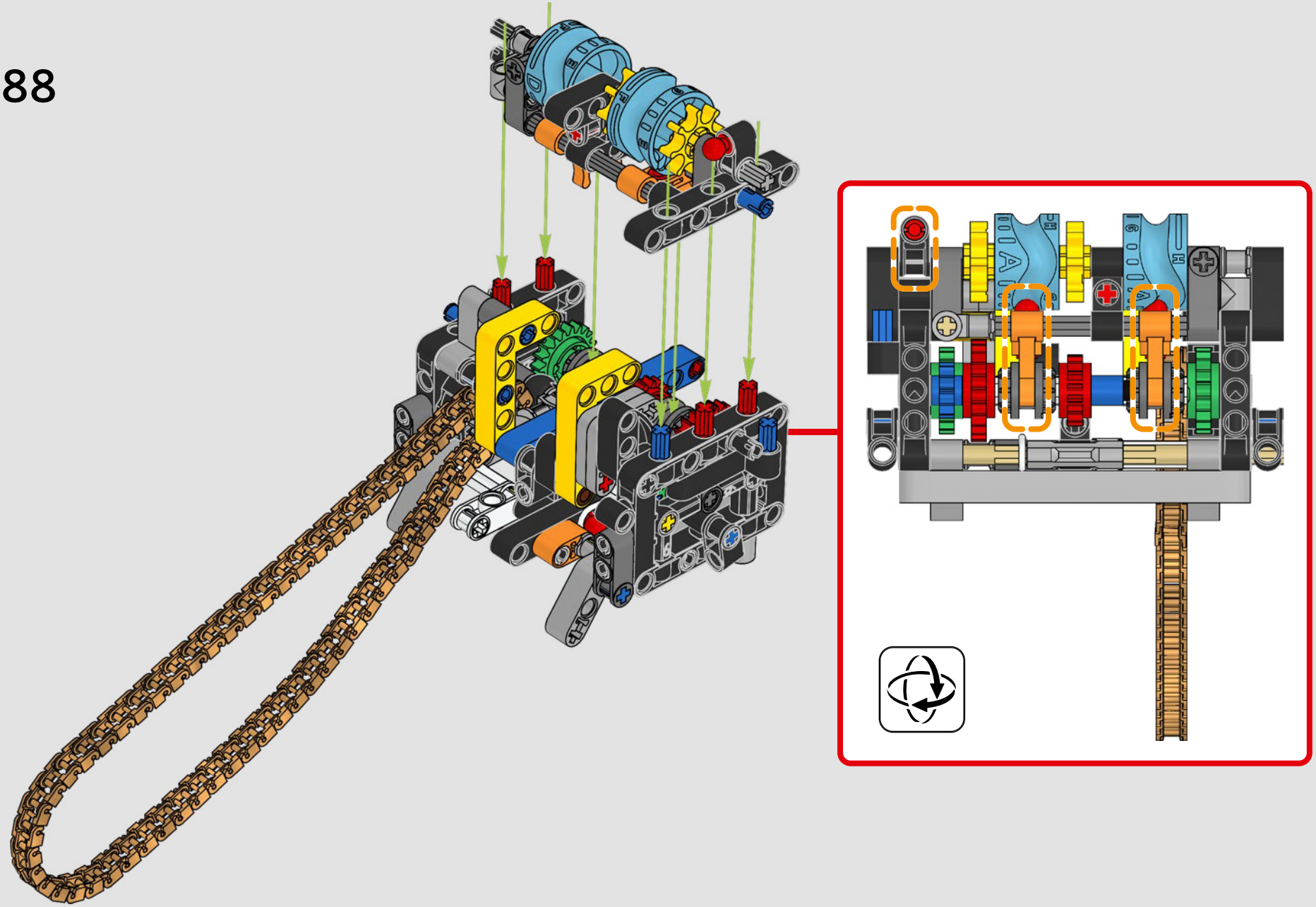

2x

189

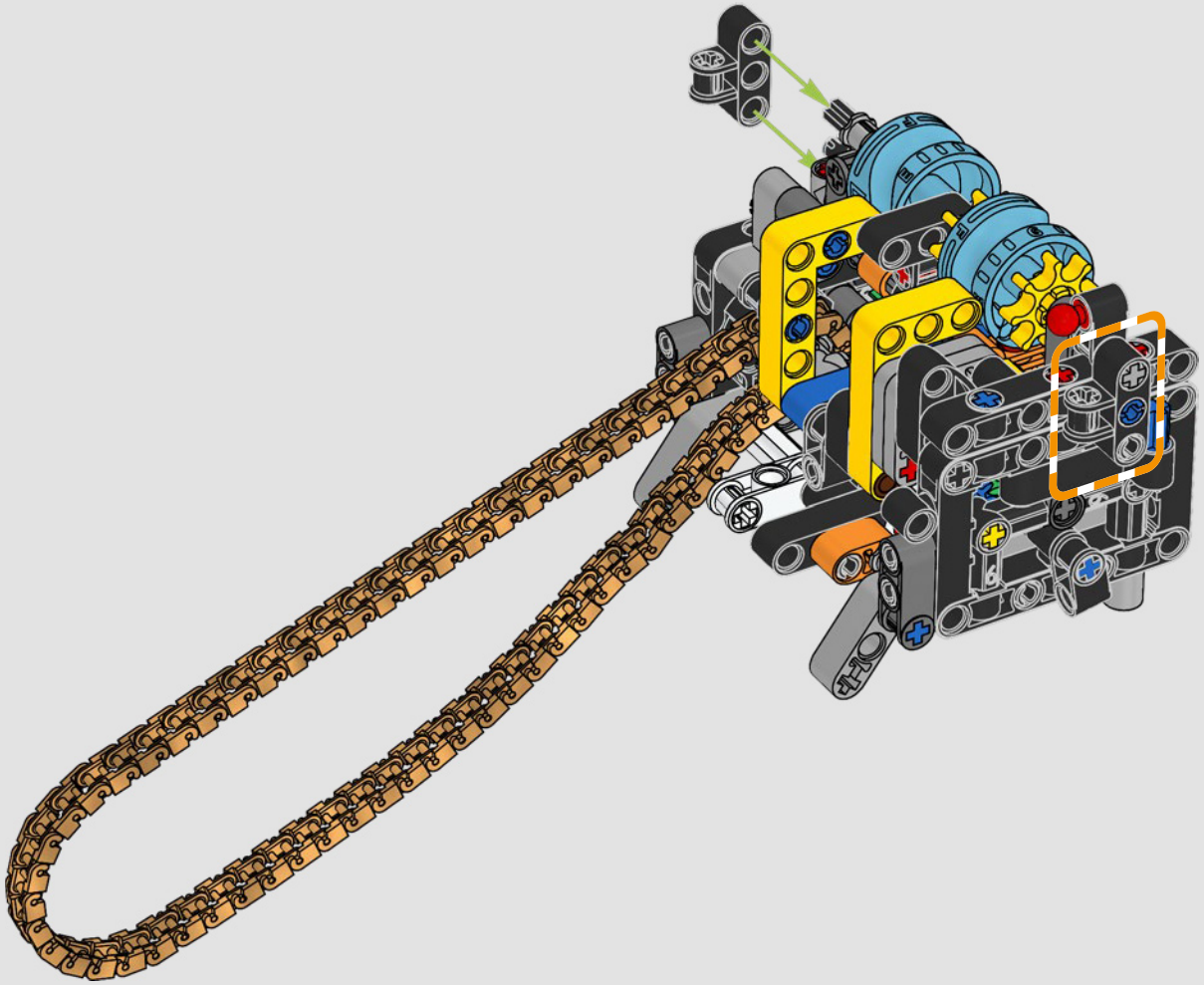

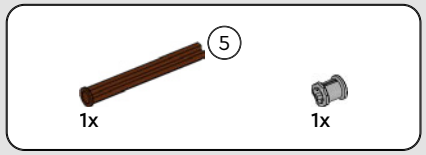

190

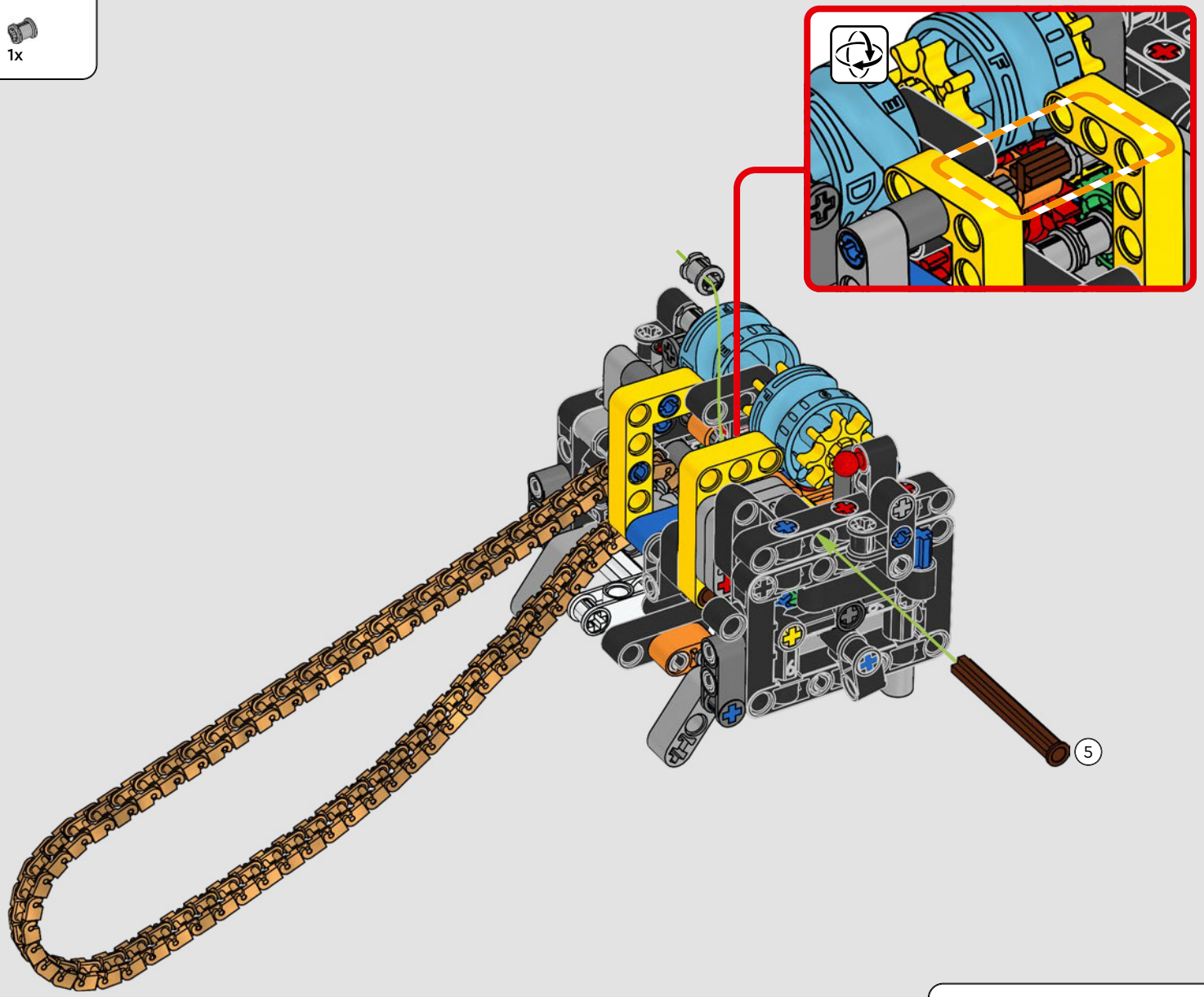

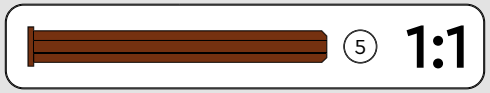

1x

191

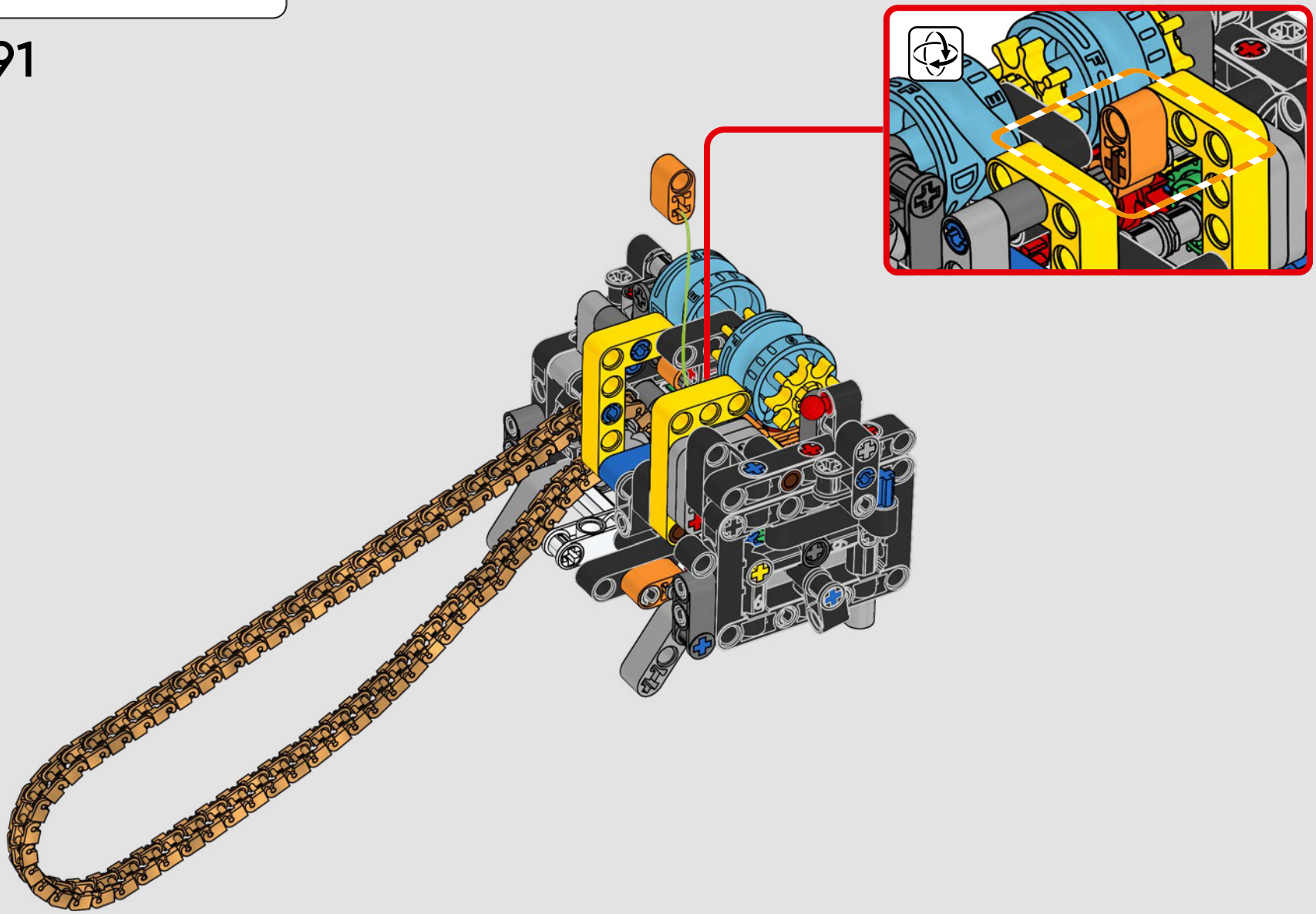

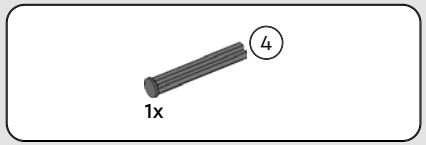

192

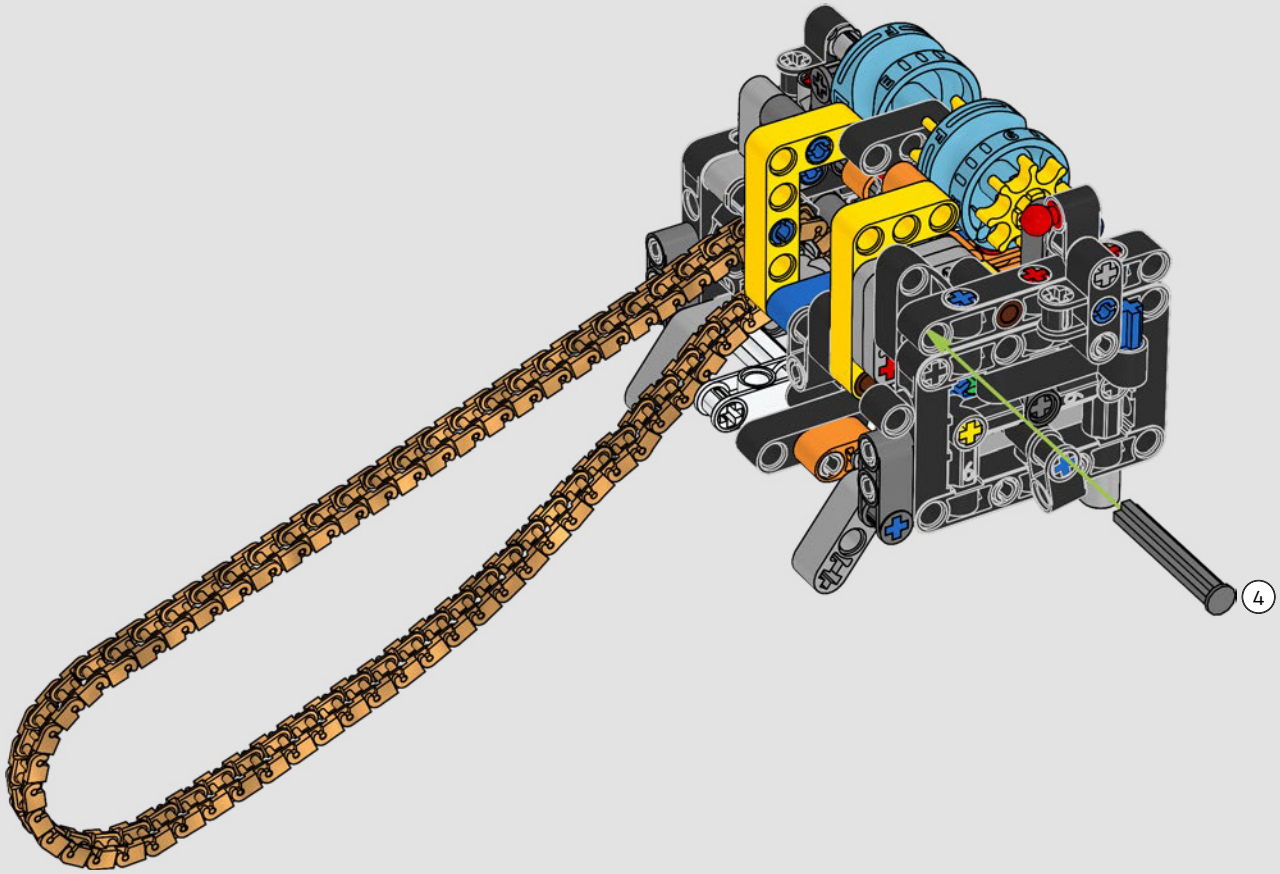

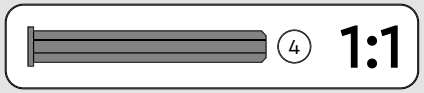

193

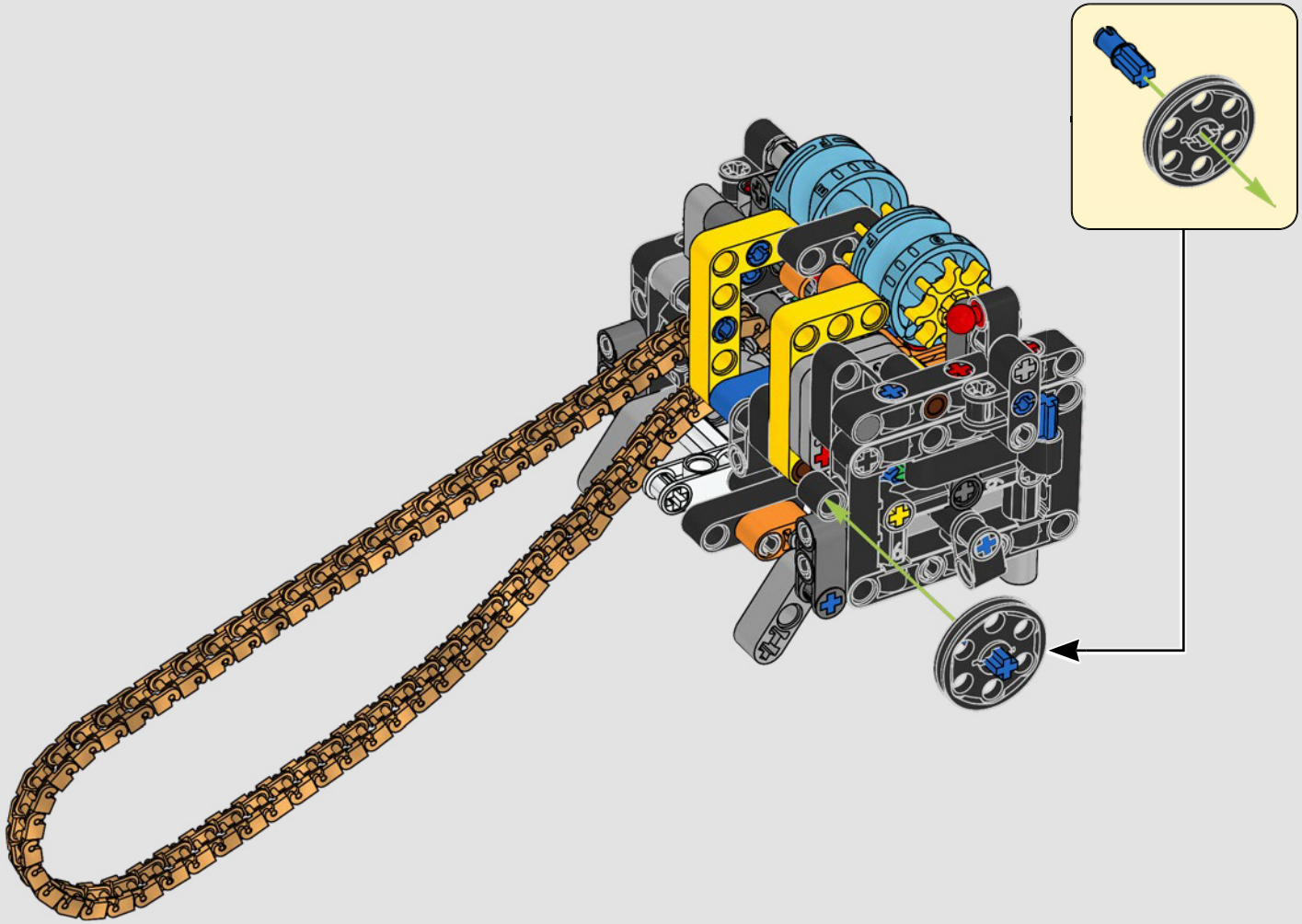

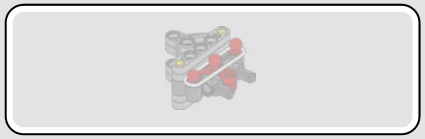

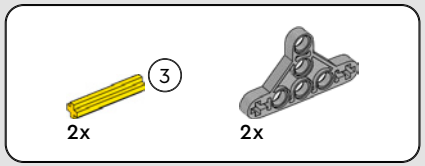

194

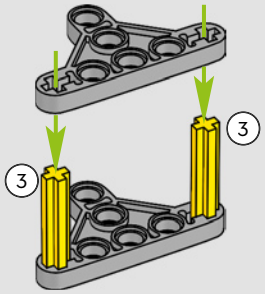

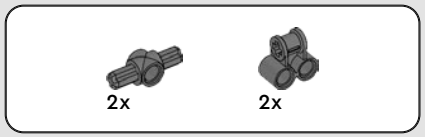

195

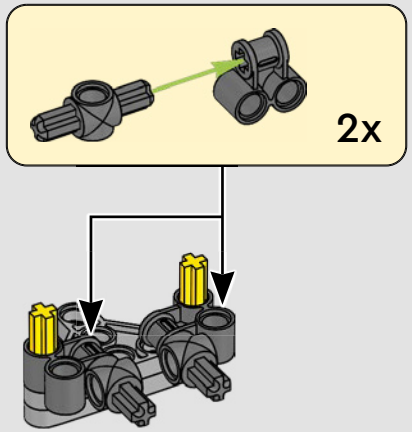

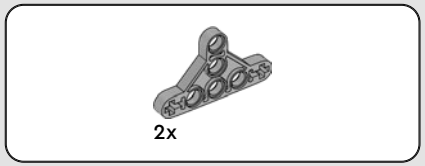

196

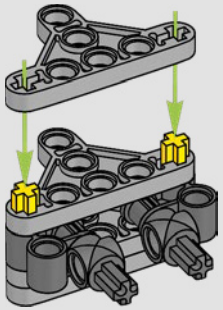

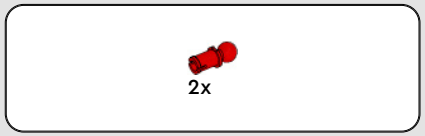

197

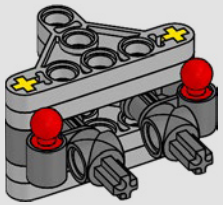

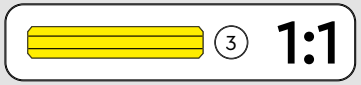

198

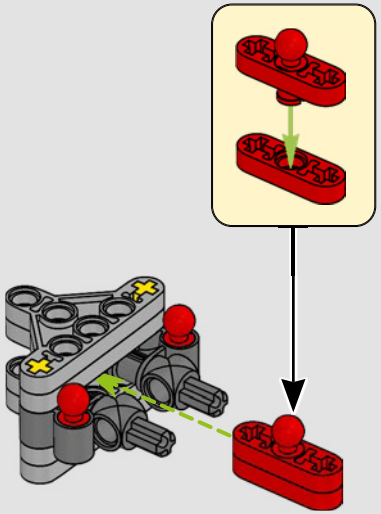

199

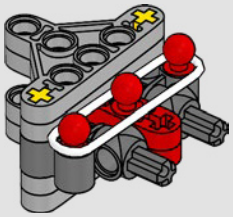

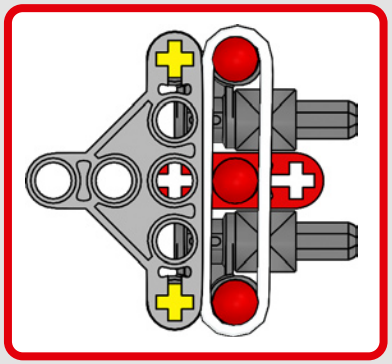

200

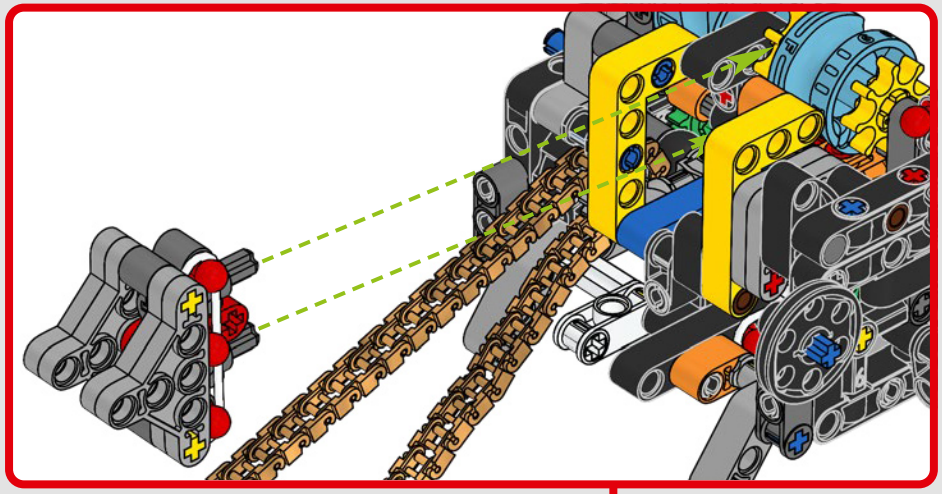

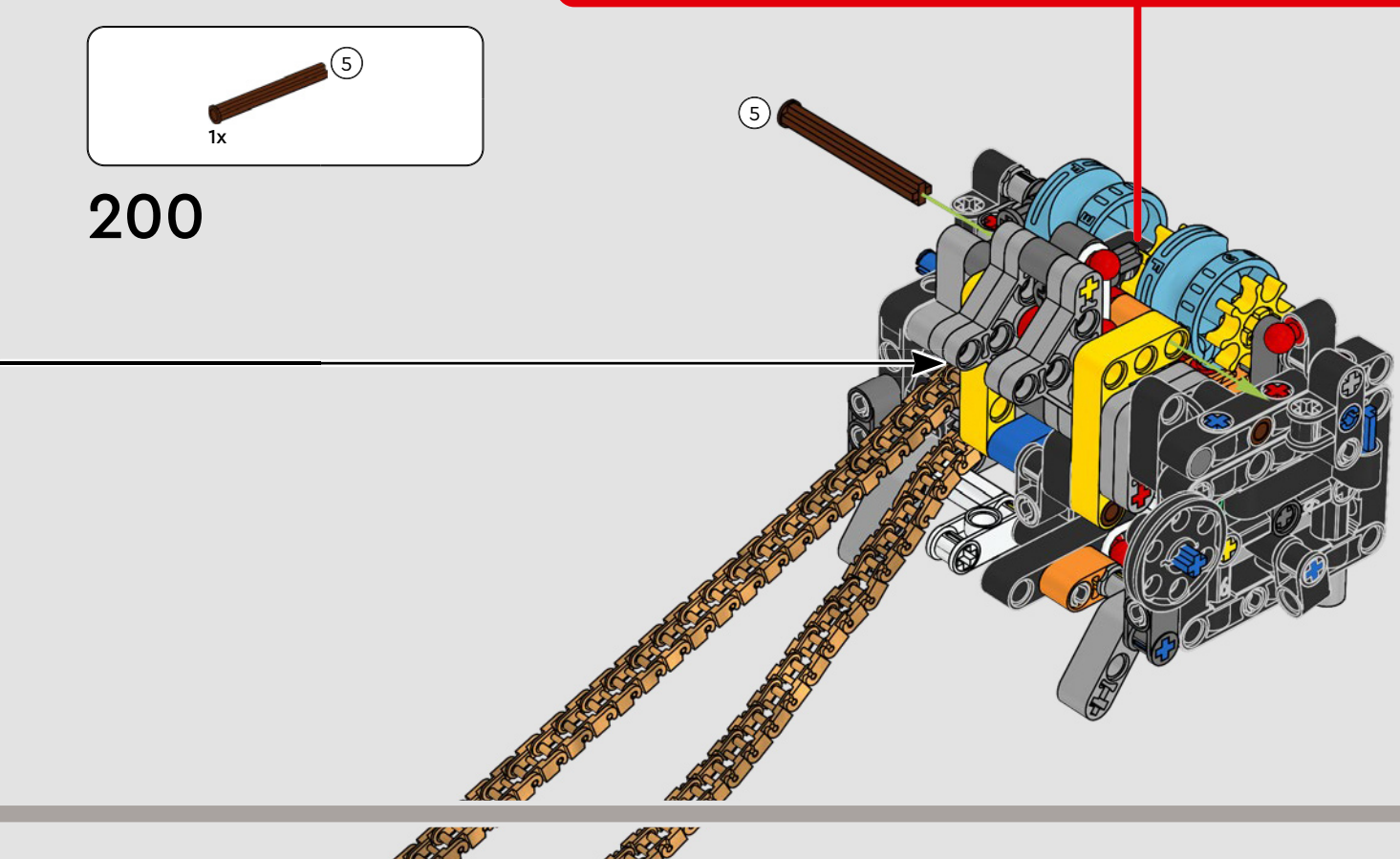

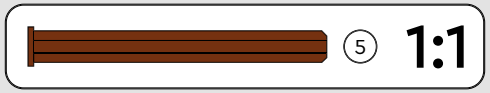

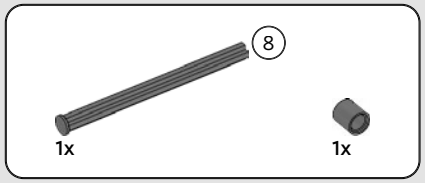

201

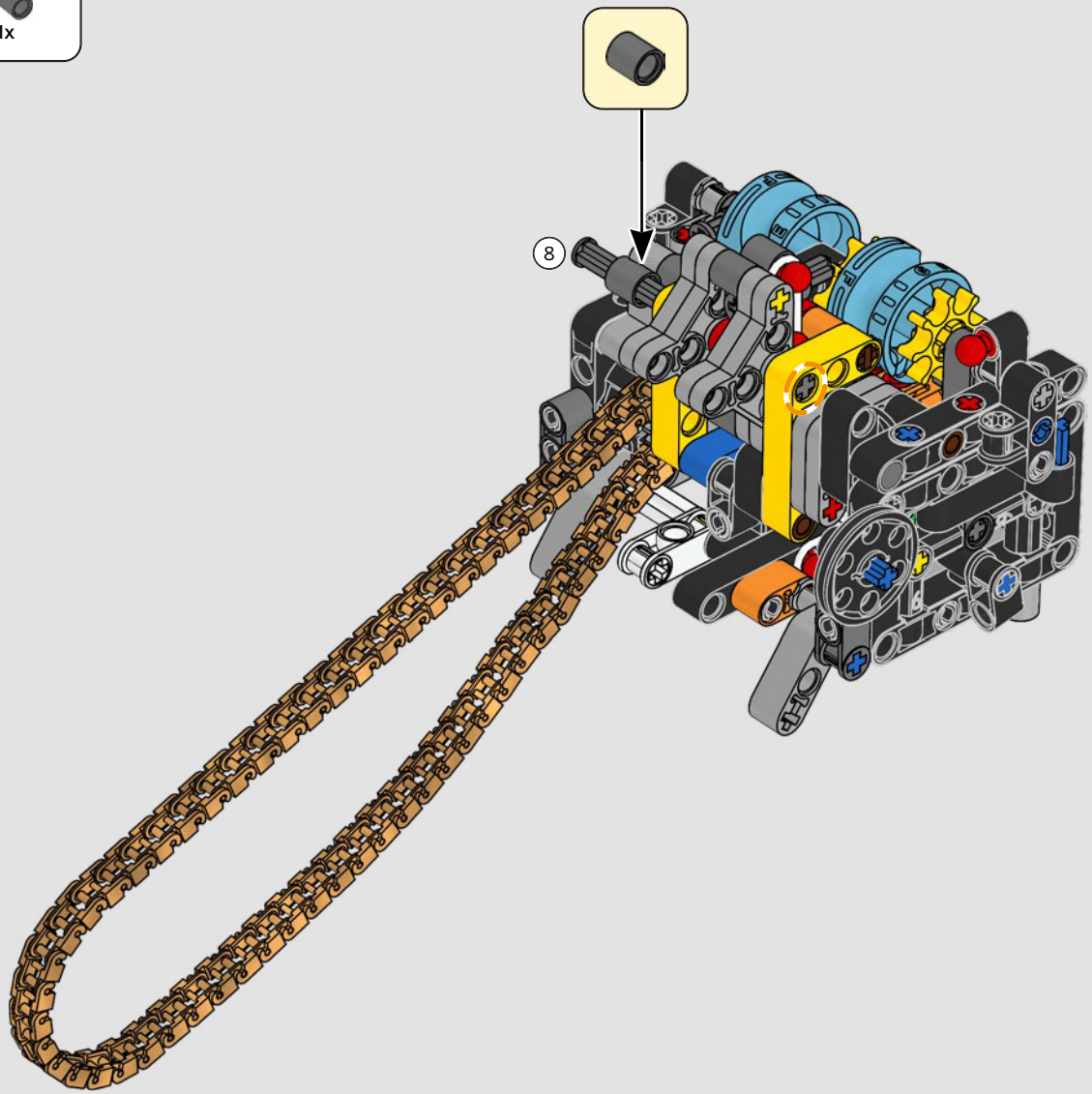

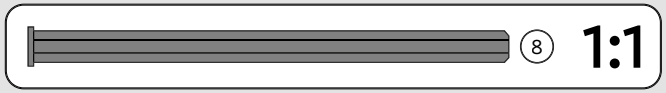

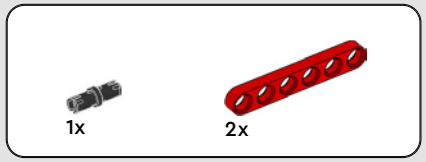

202

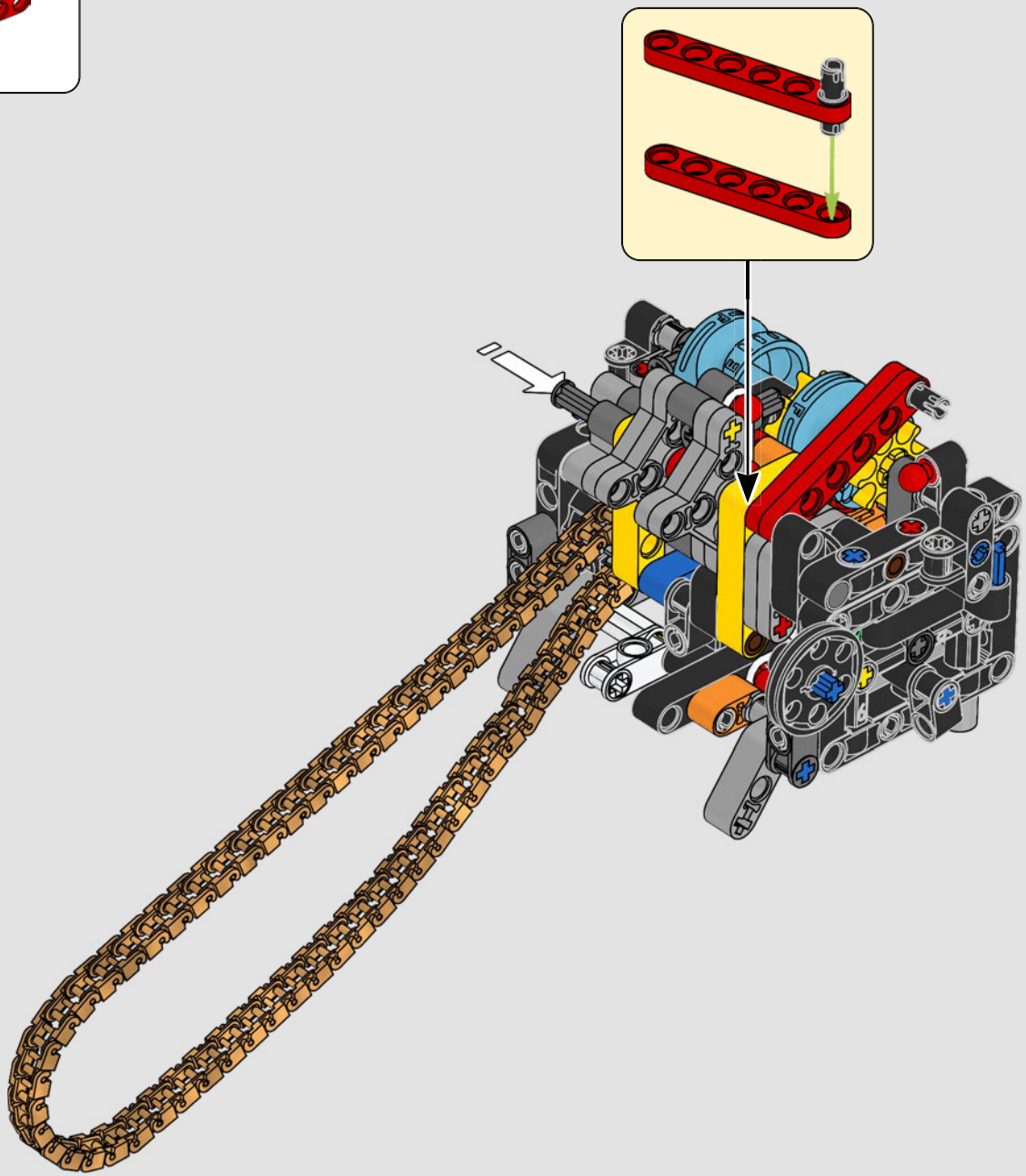

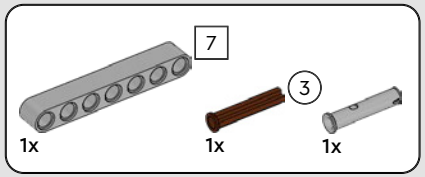

203

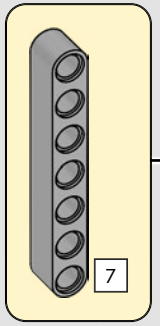

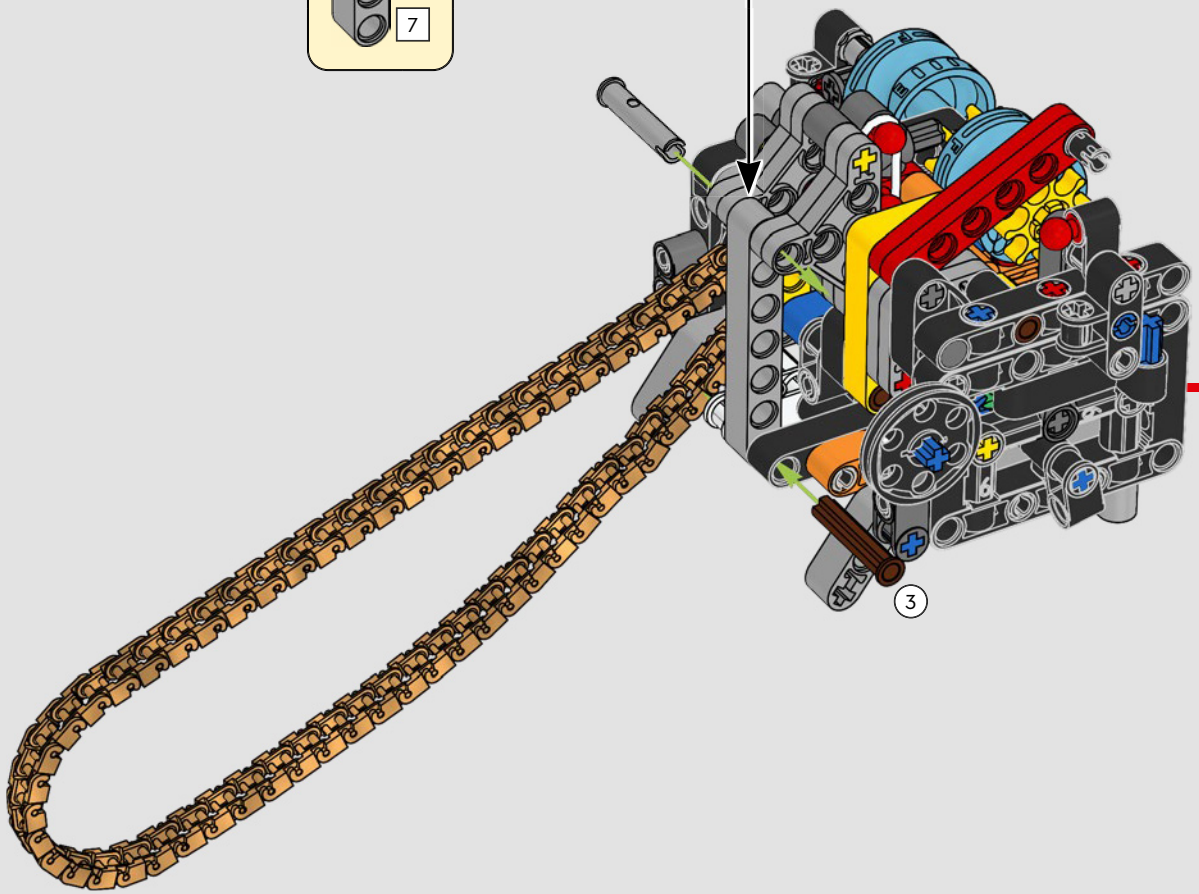

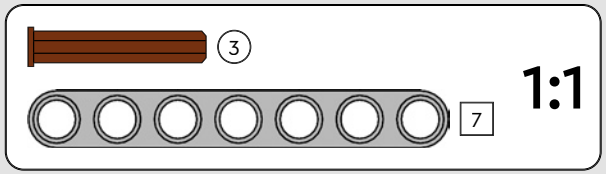

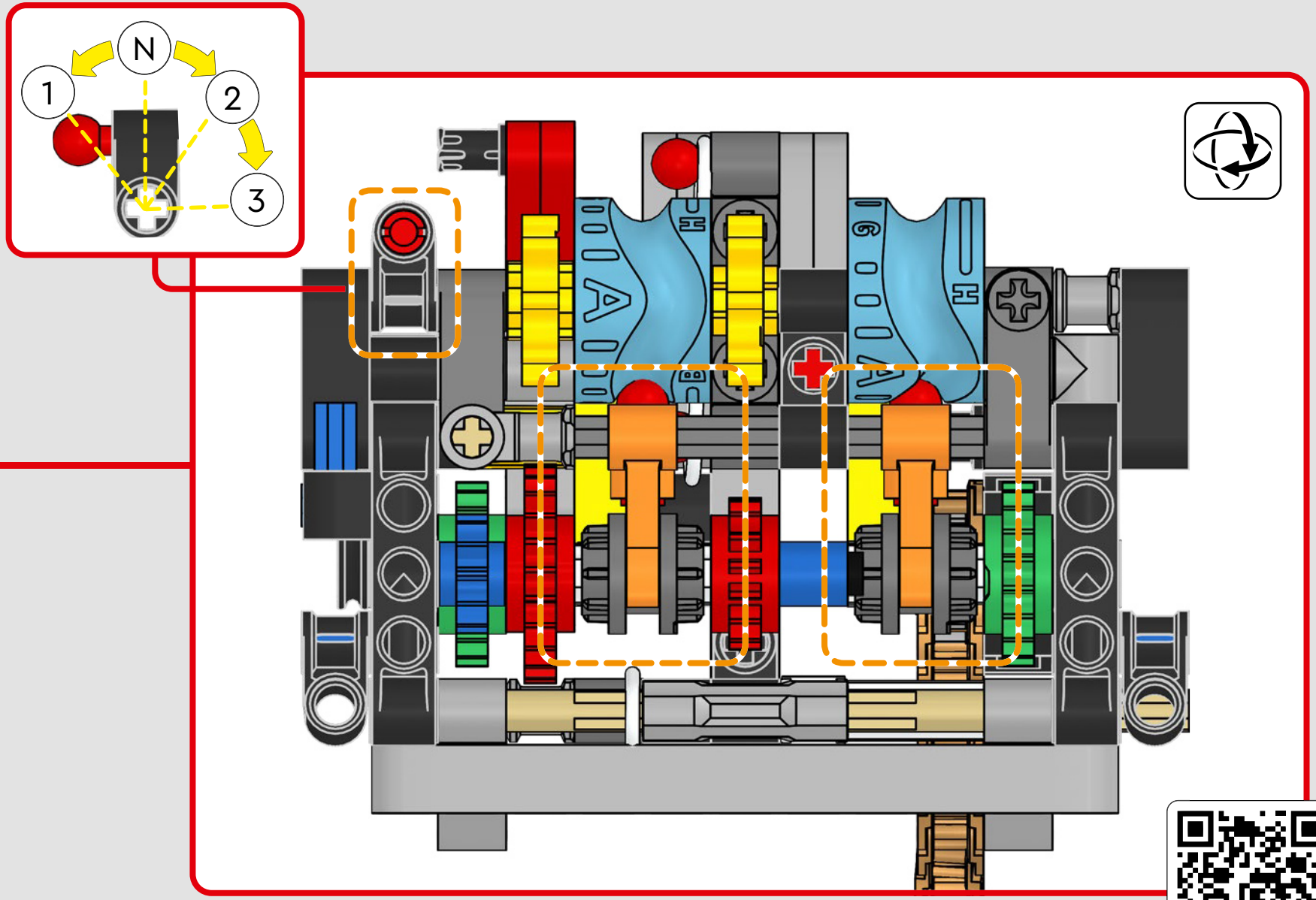
N
1
2
3

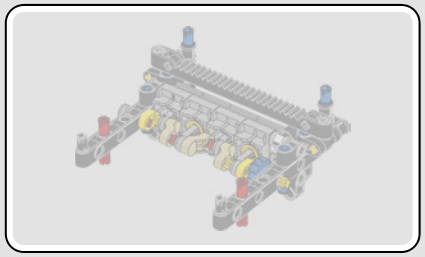

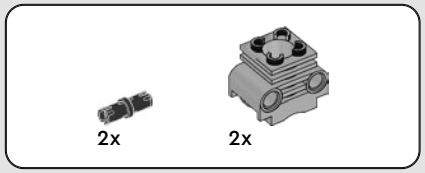

204

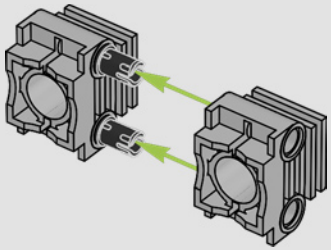

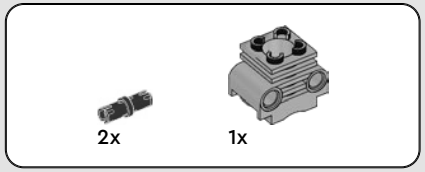

205

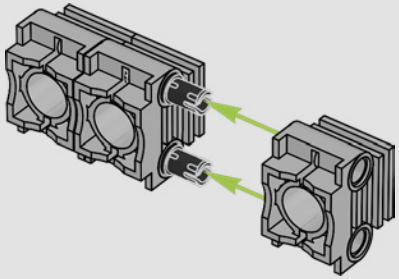

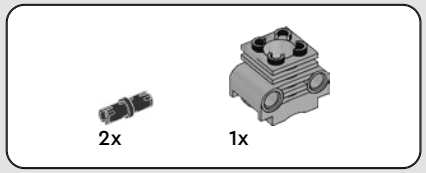

206

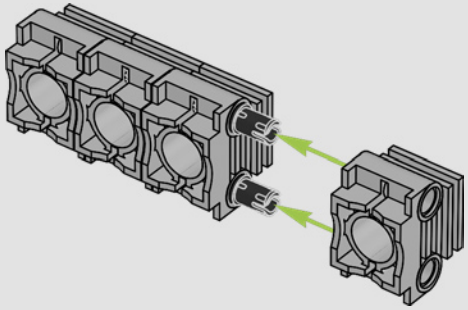

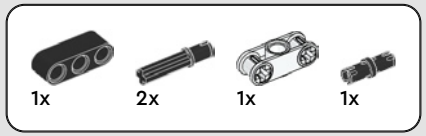

207

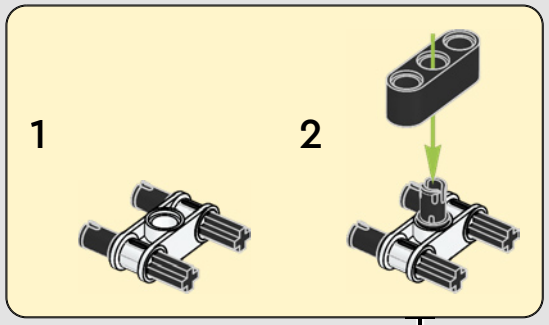

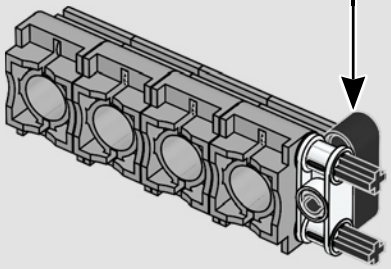

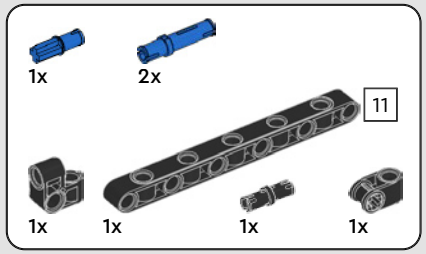

208

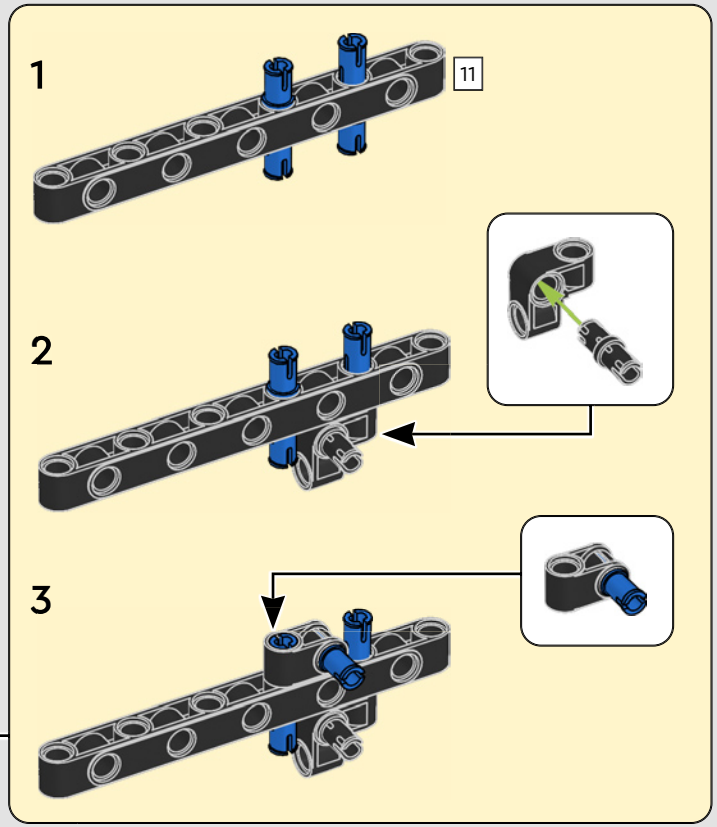

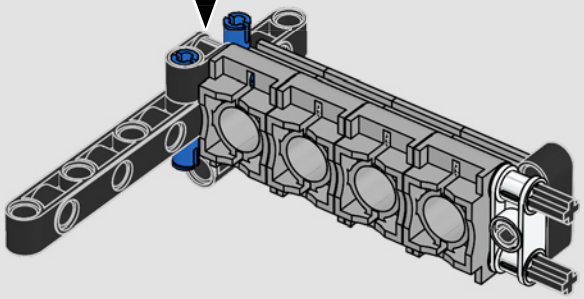

1:1

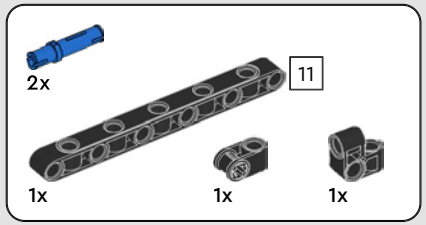

209

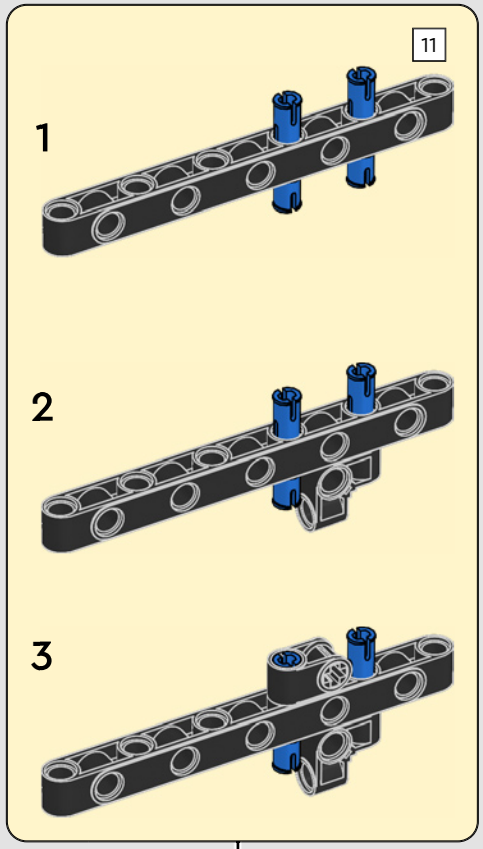

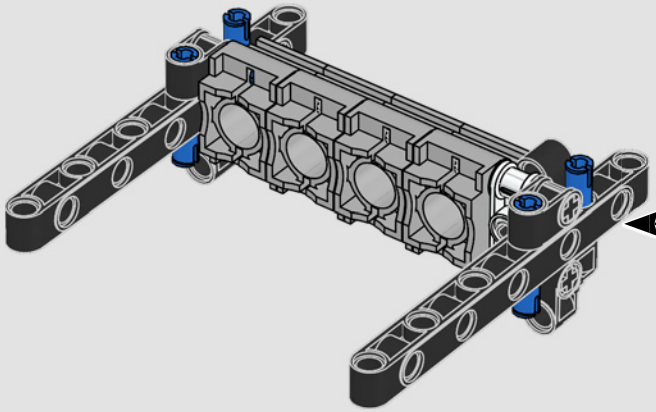

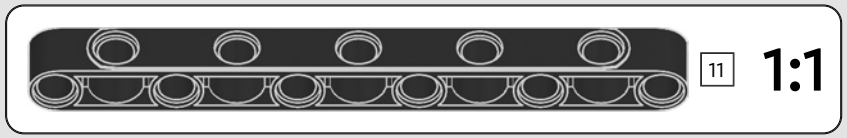

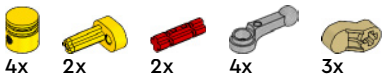

210

1

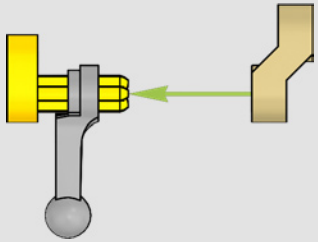

2

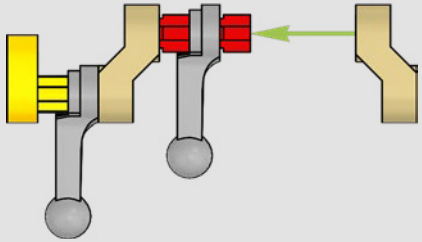

3

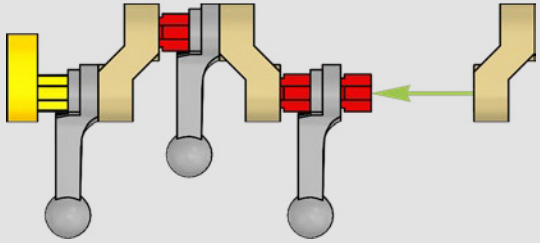

4

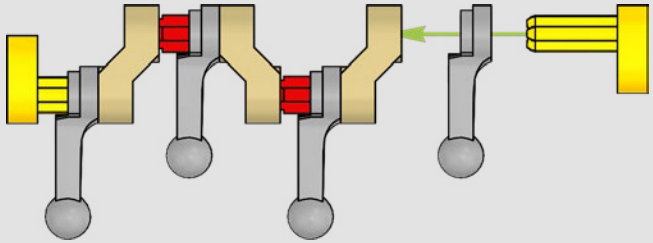

5

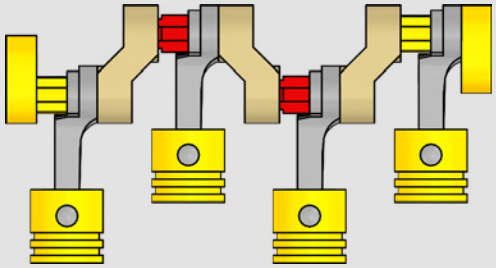

1:1

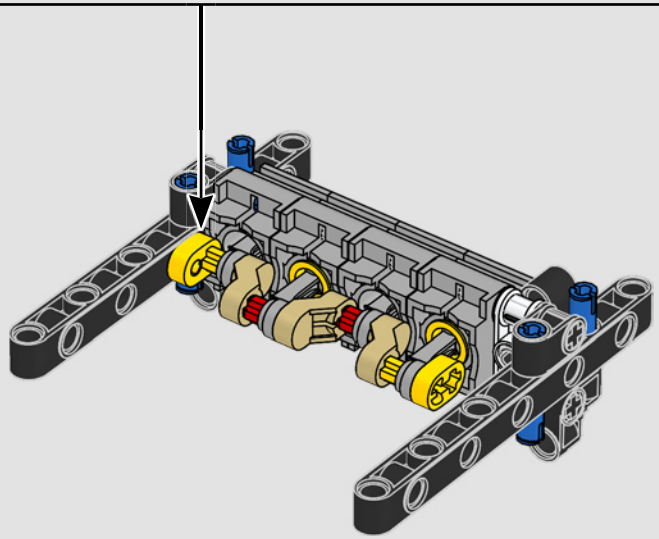

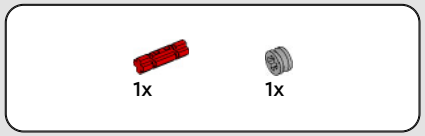

211

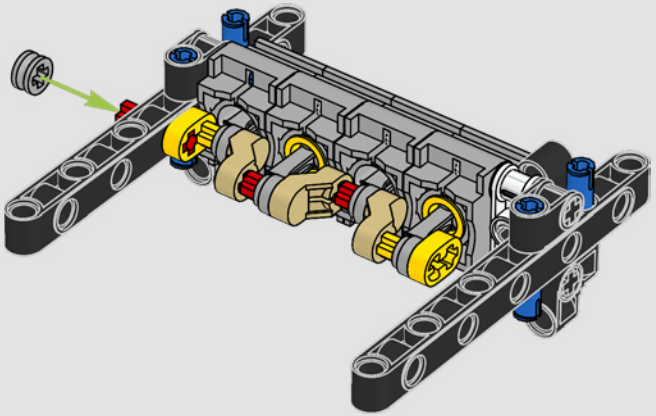

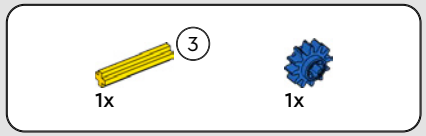

212

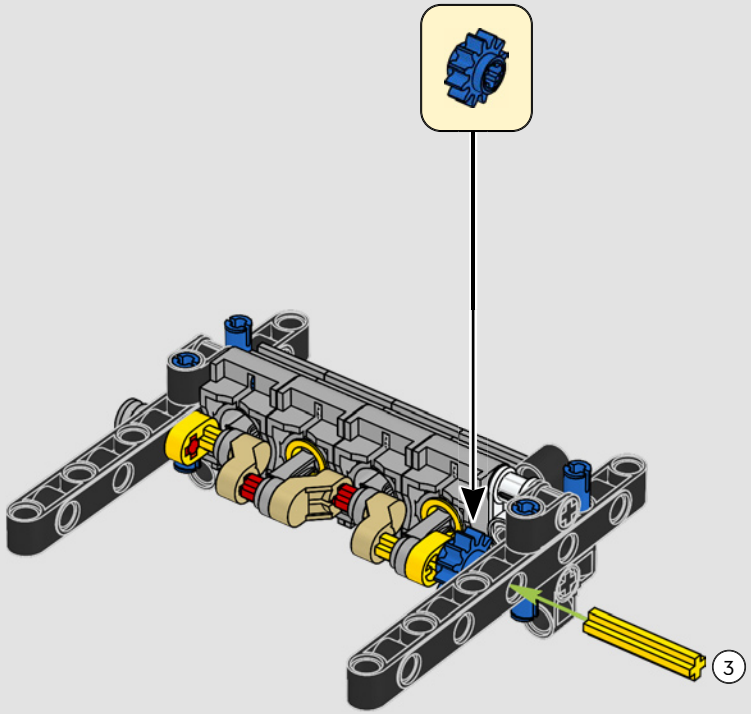

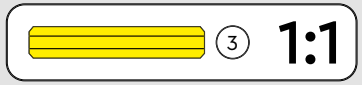

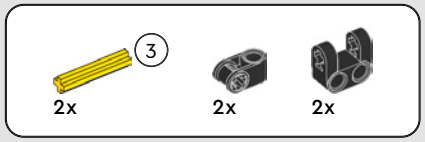

213

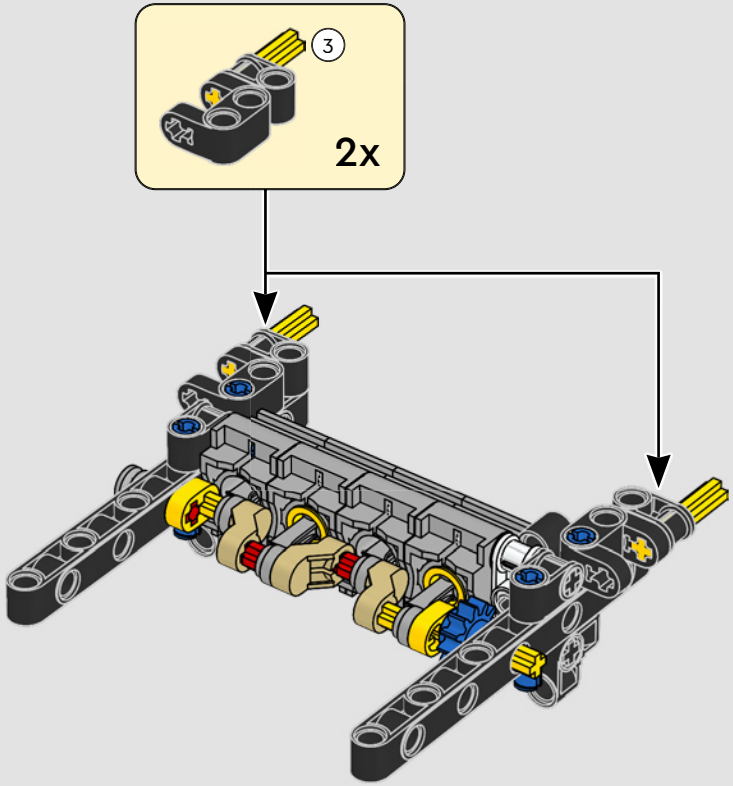

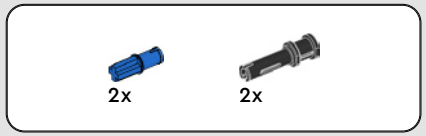

214

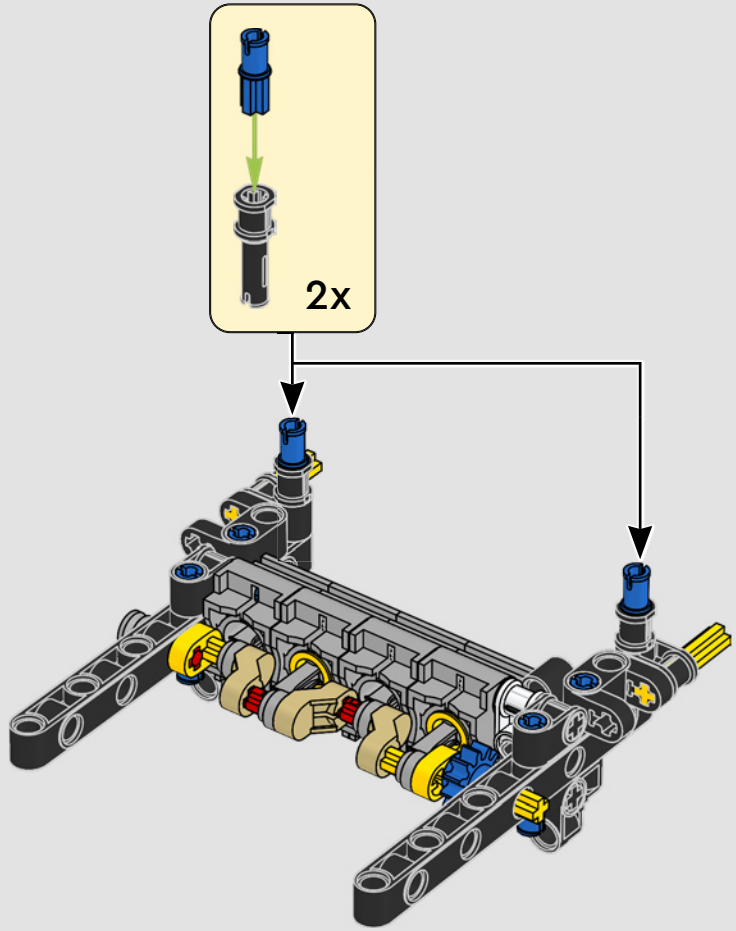

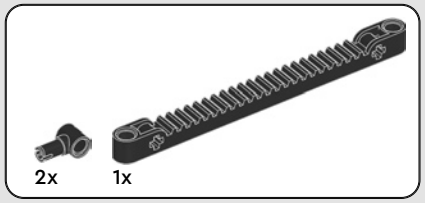

215

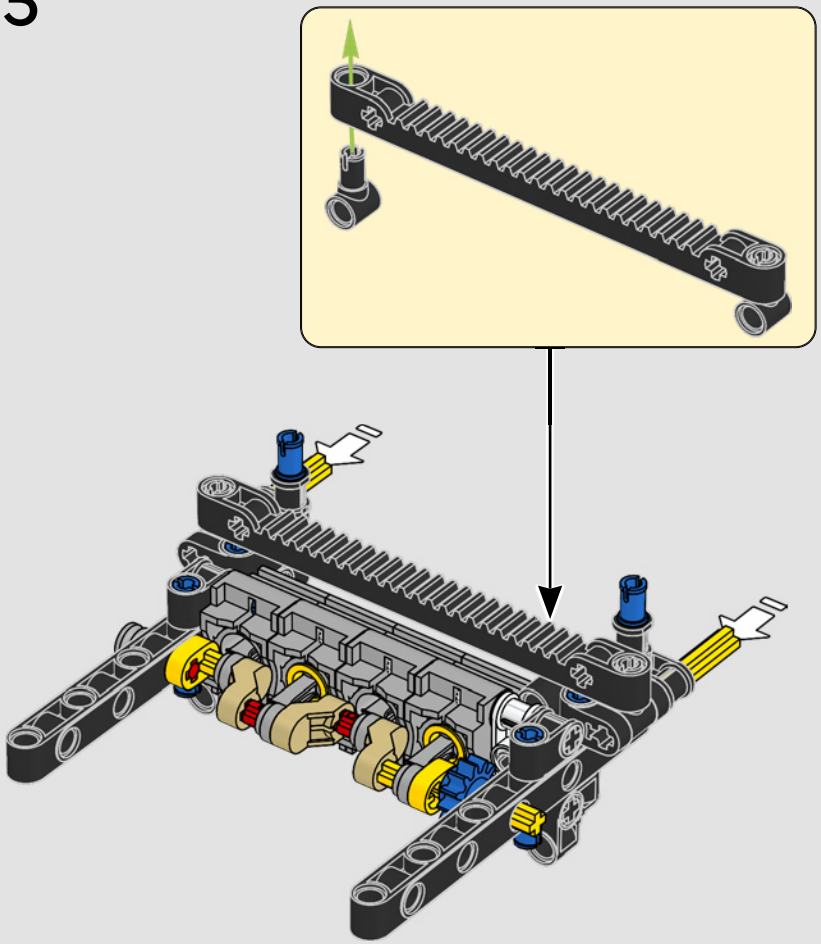

216

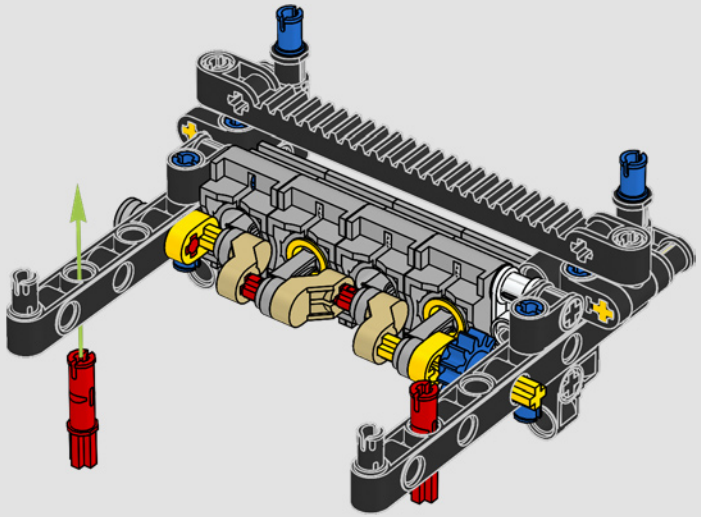

217

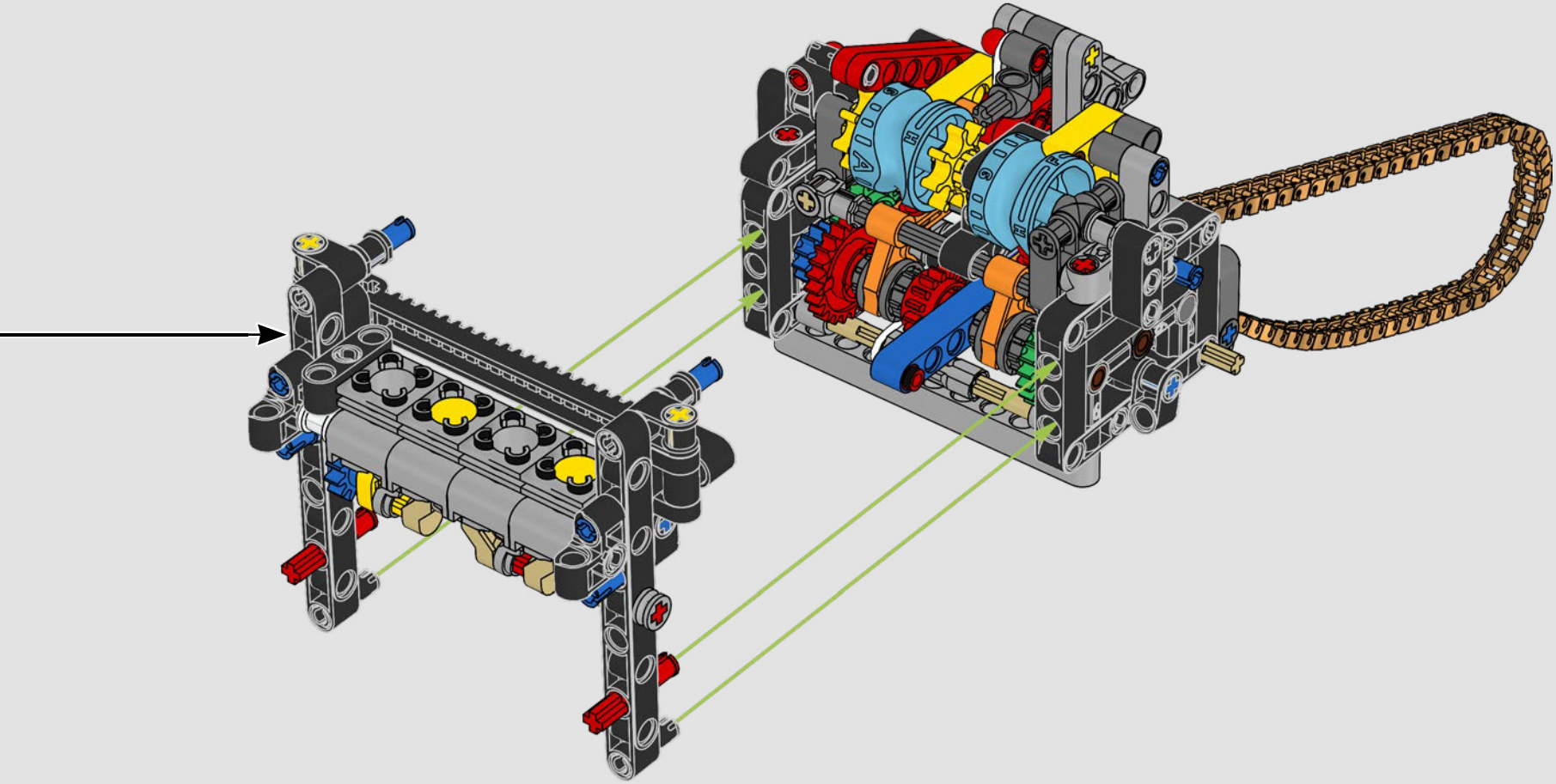

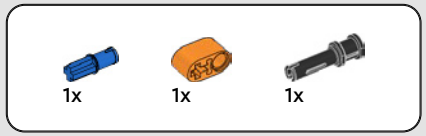

218

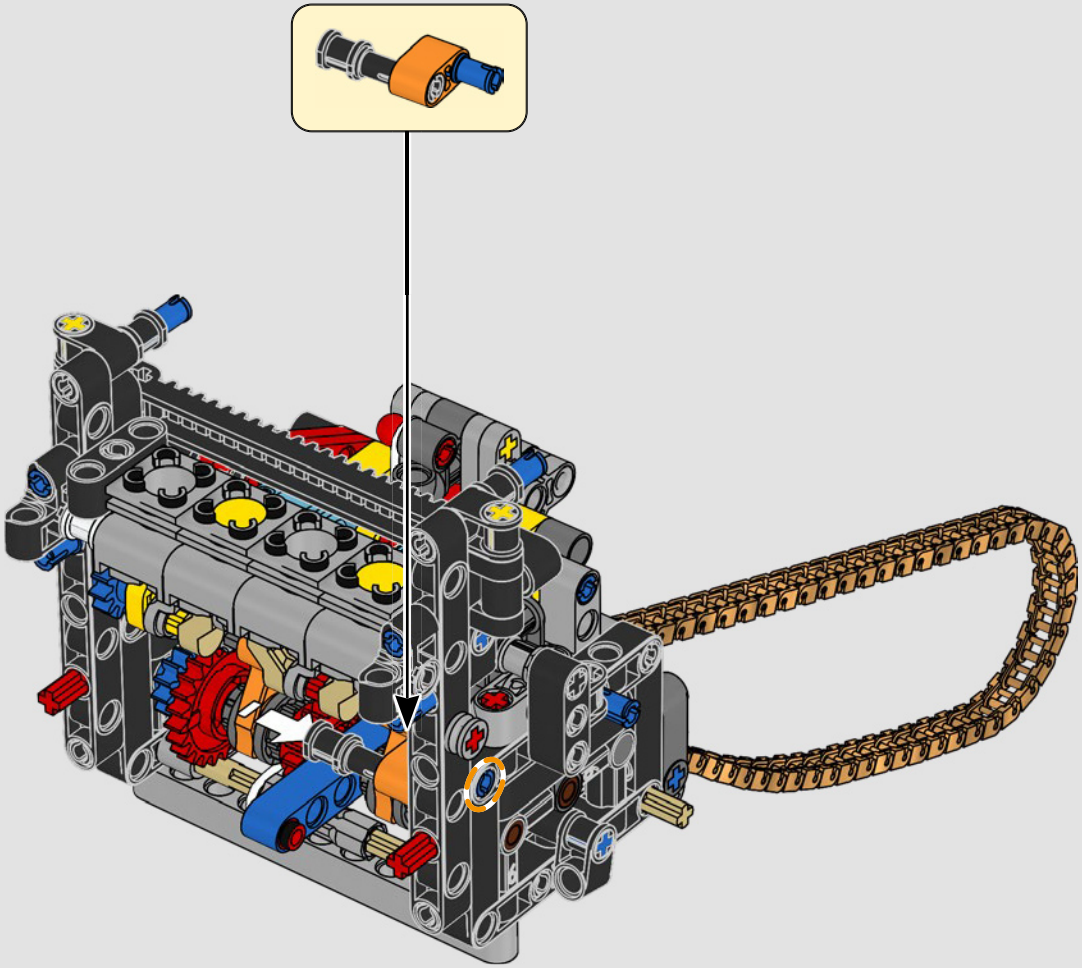

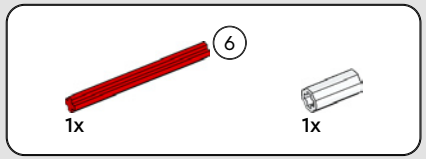

219

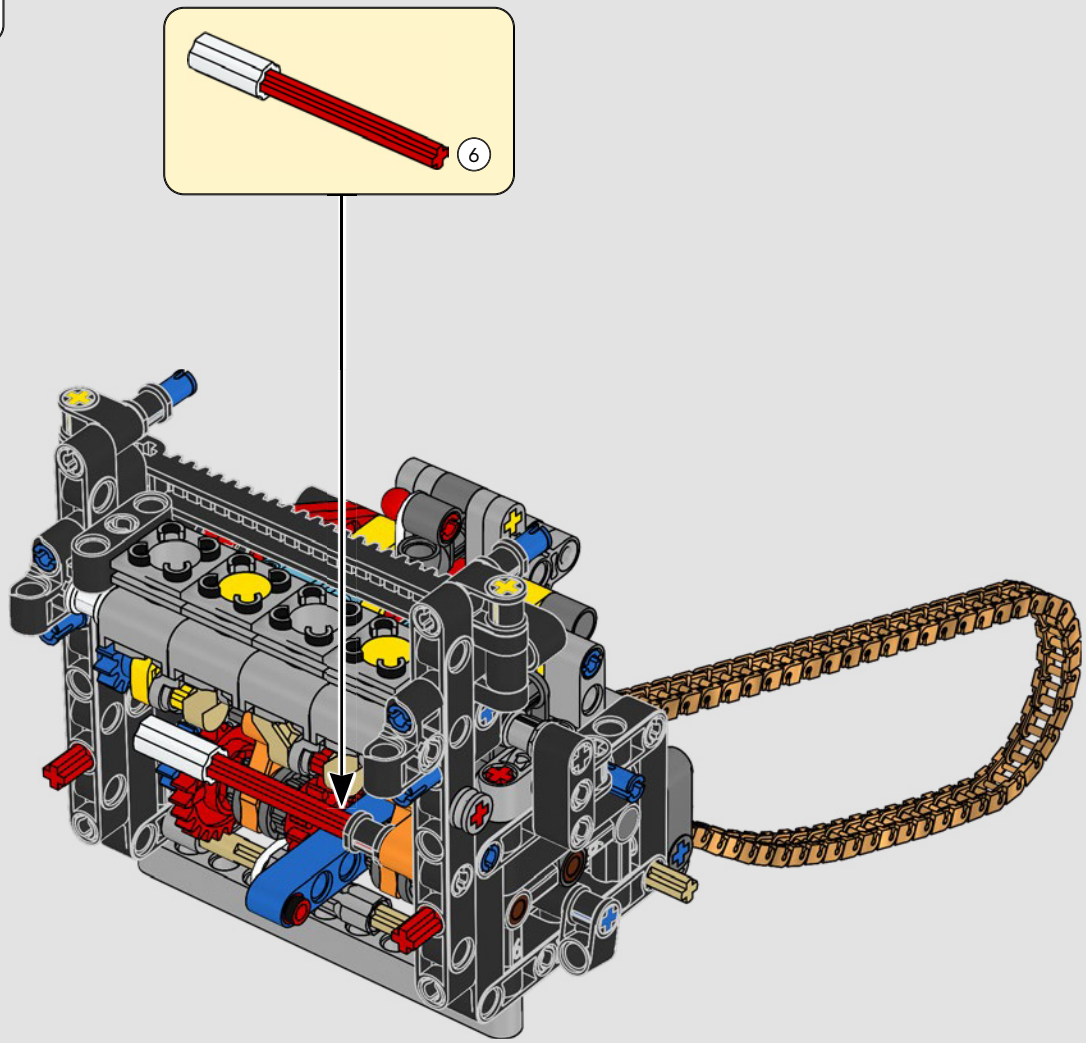

220

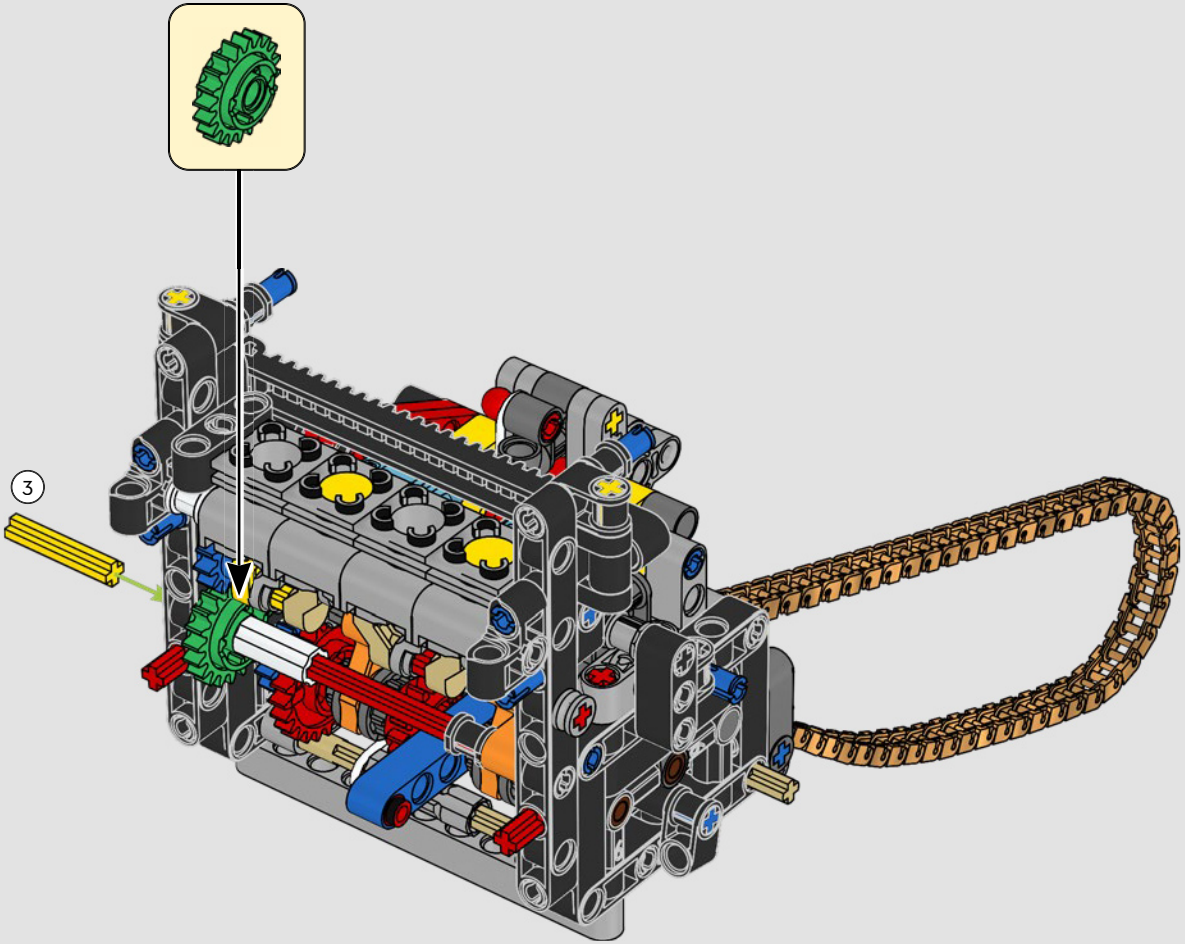

1:1

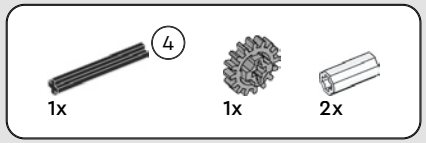

221

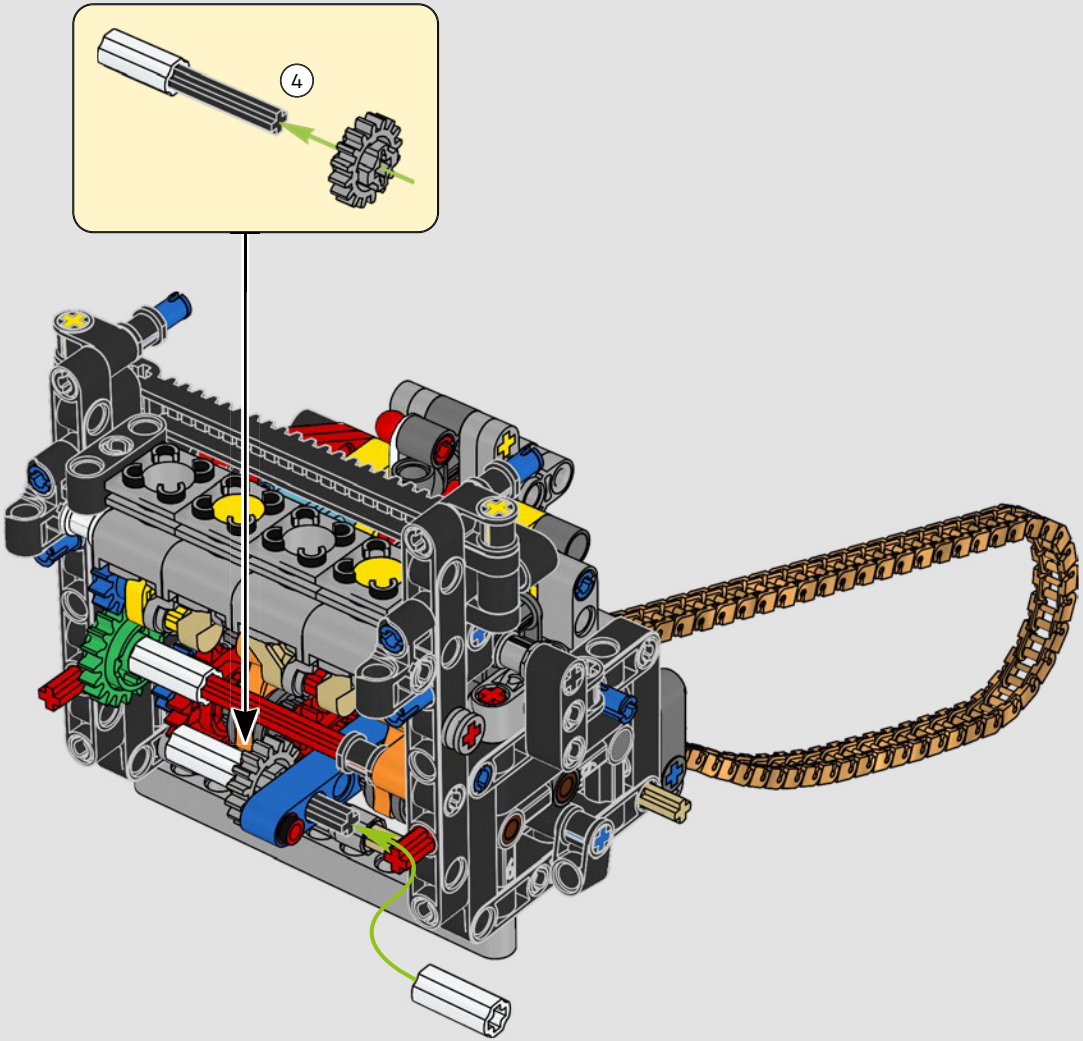

222

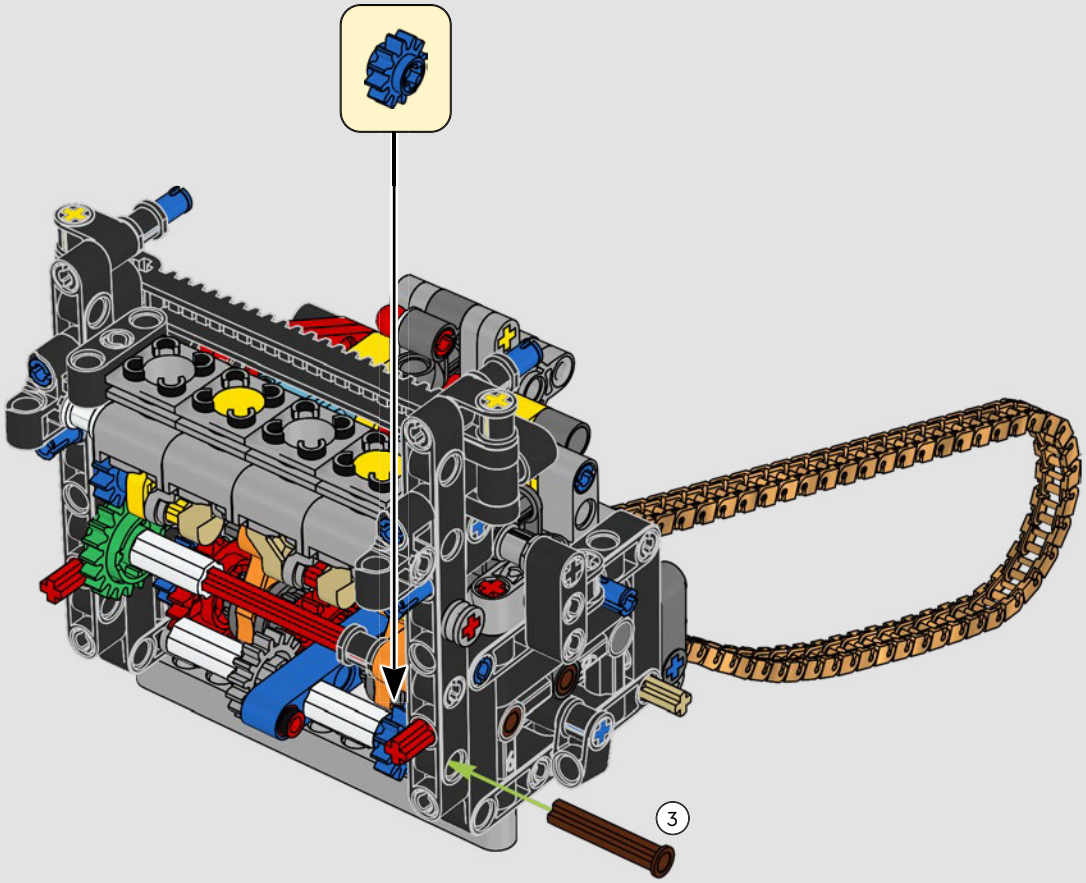

1:1

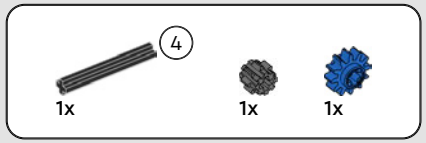

223

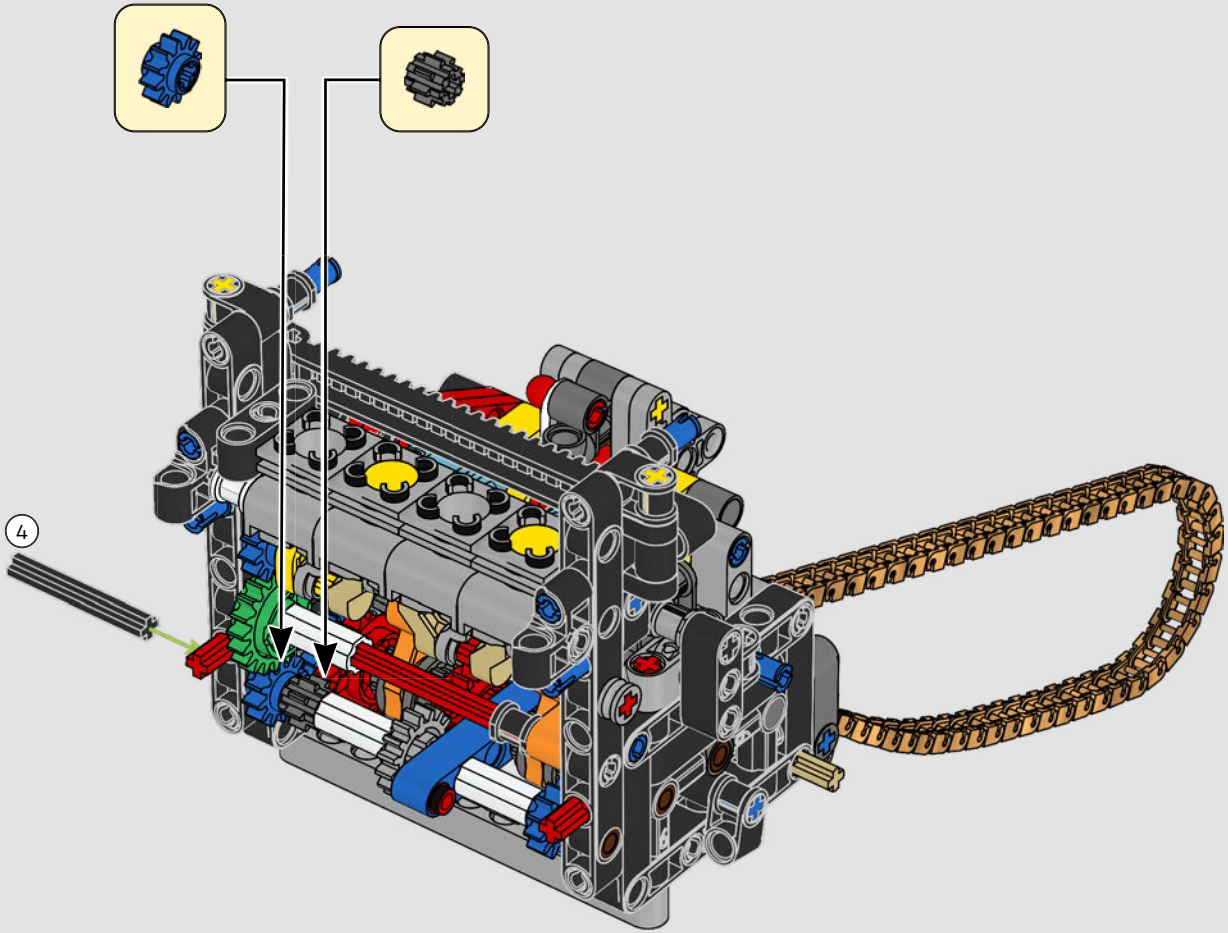

224

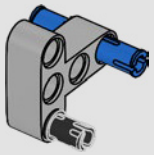

225

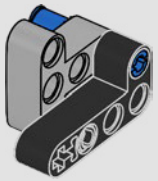

1:1

226

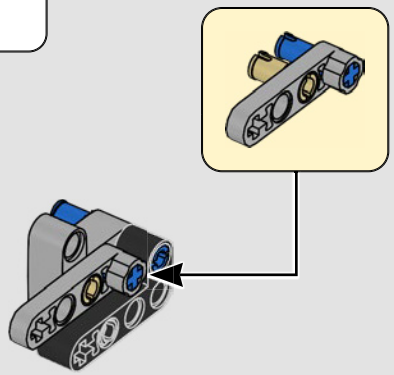

227

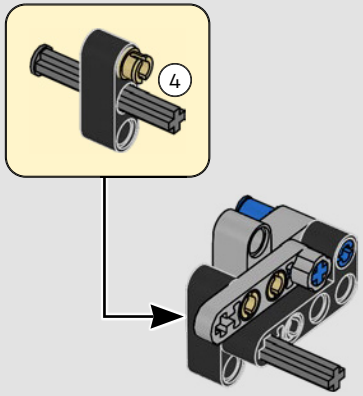

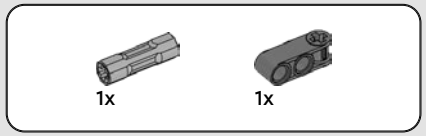

228

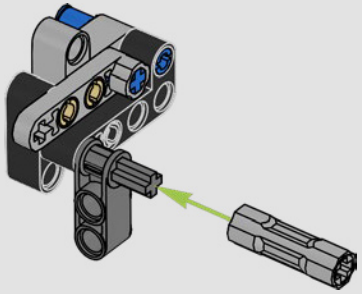

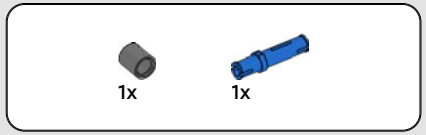

229

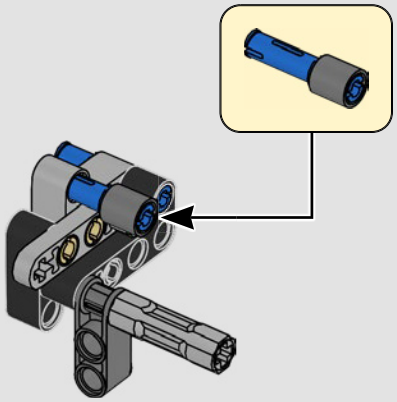

230

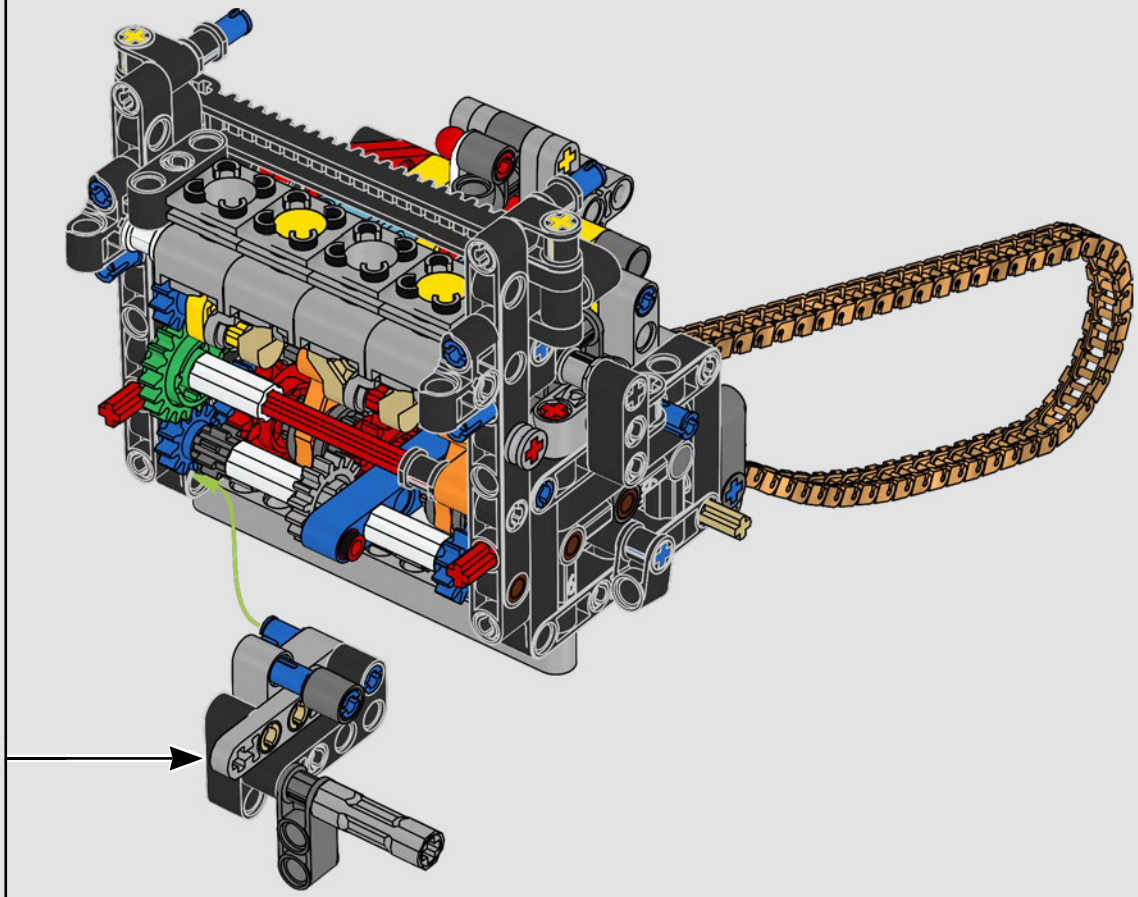

231

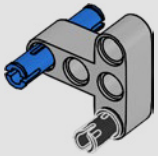

232

1:1

233

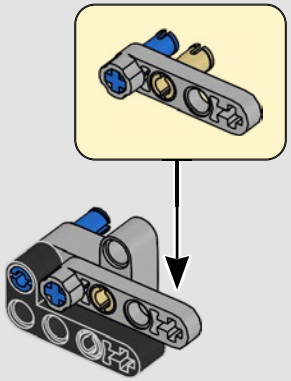

234

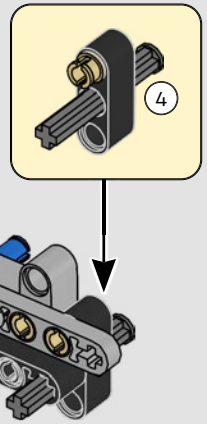

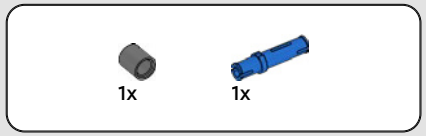

235

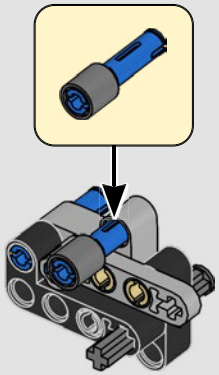

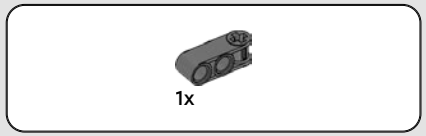

236

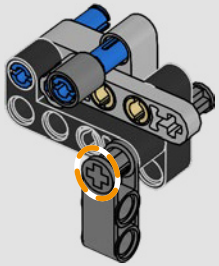

237

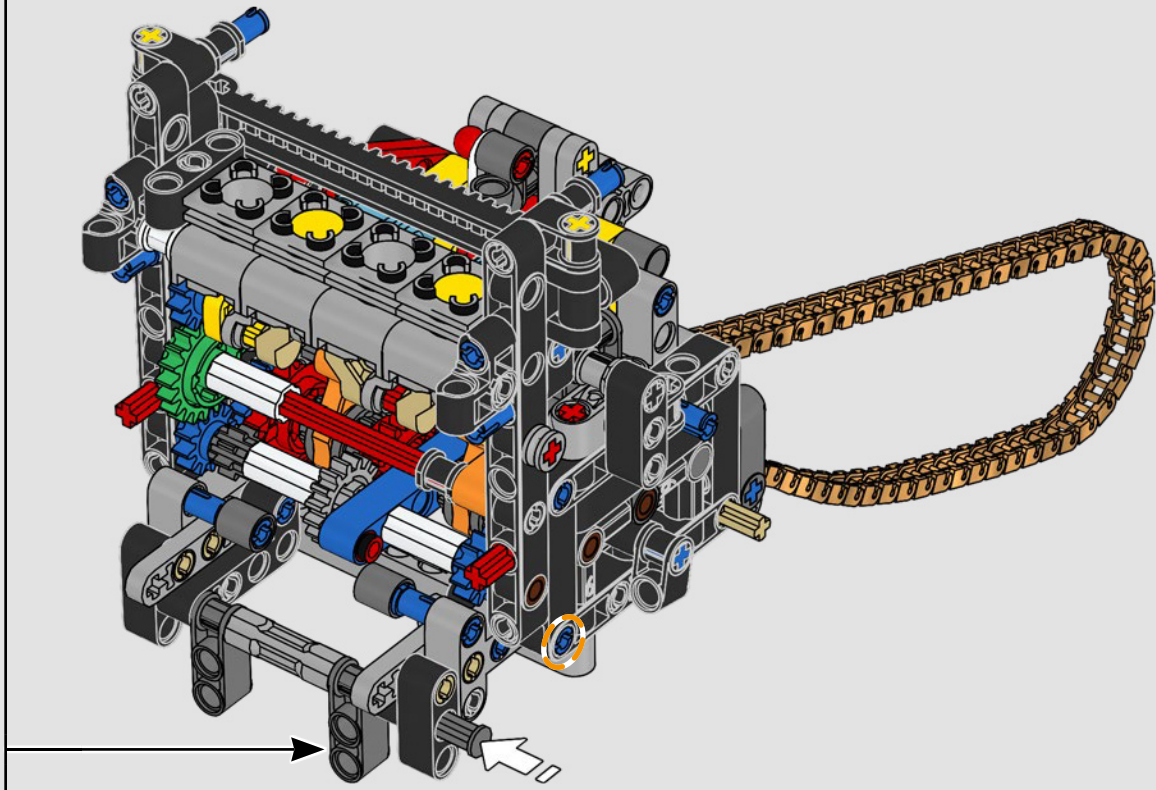

2x

238

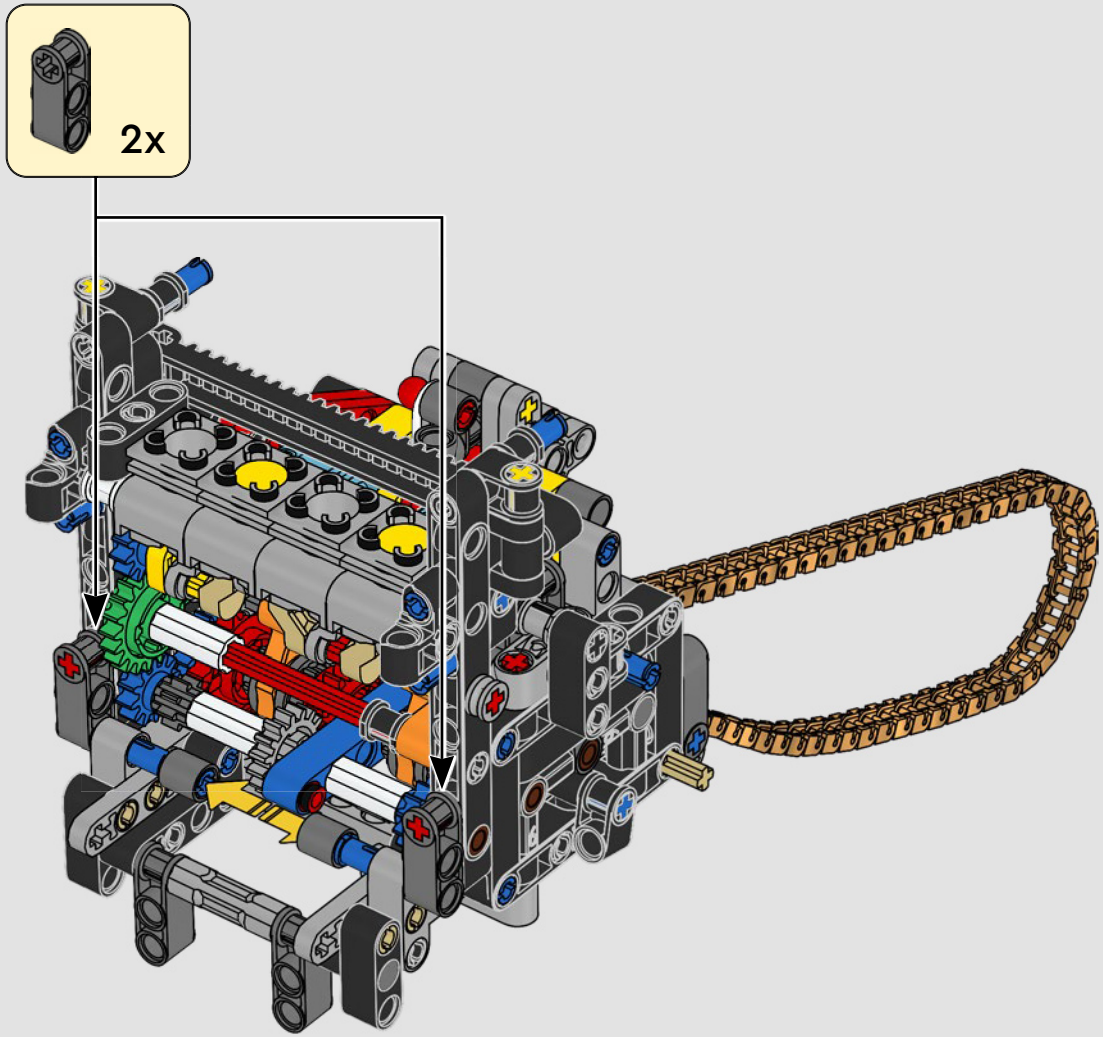

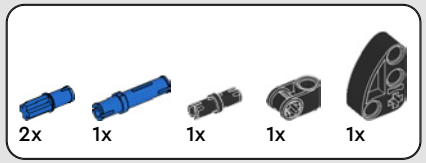

239

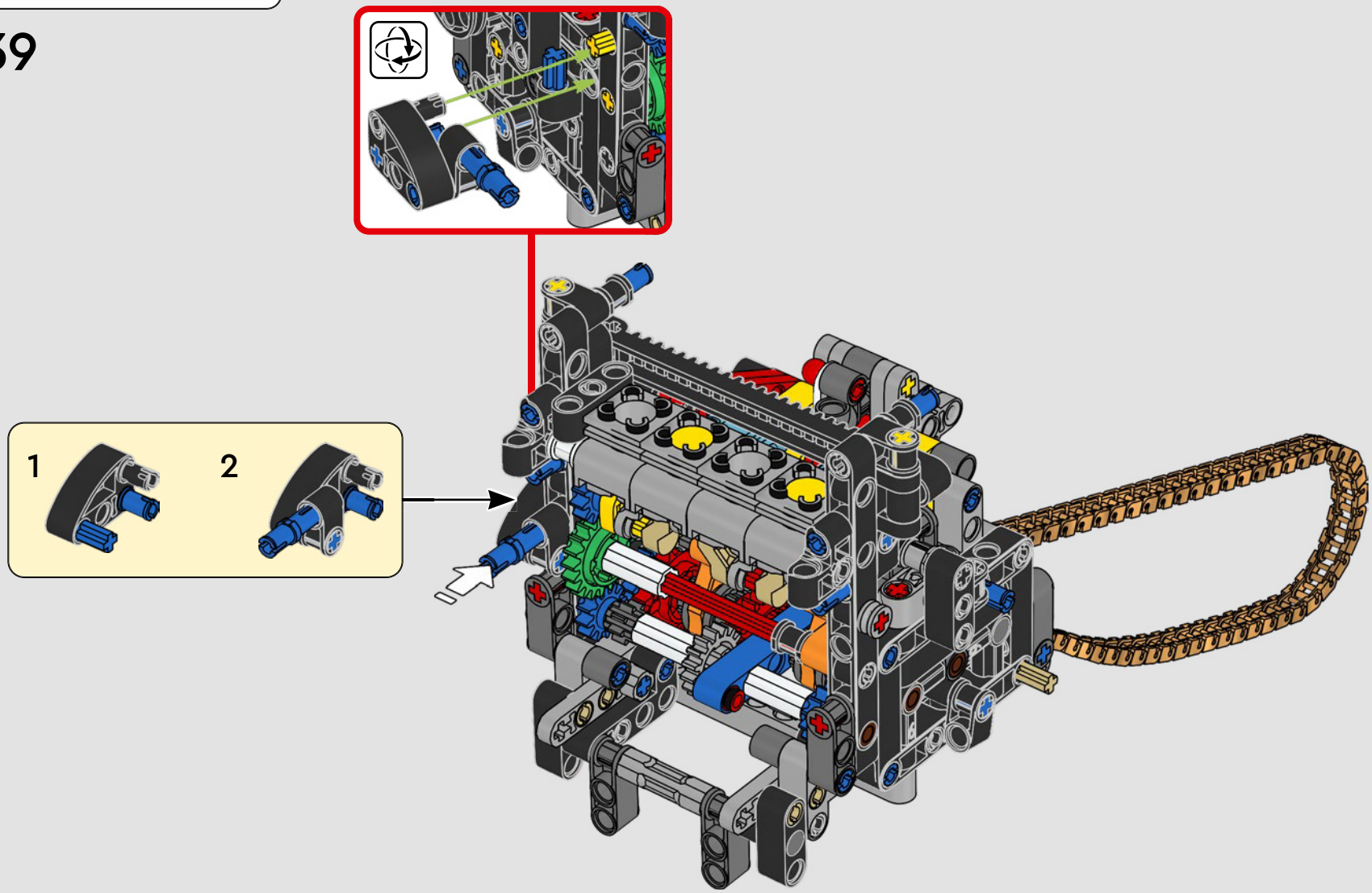

240

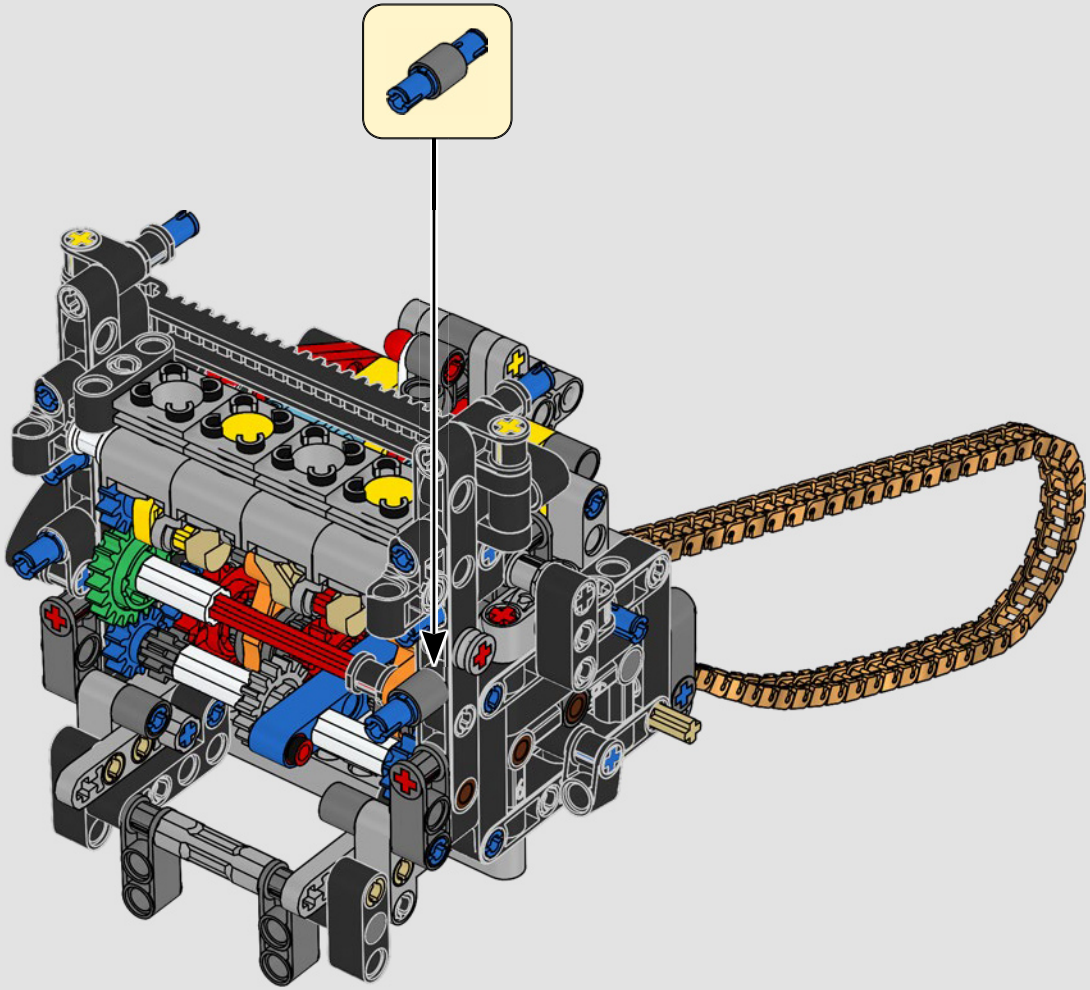

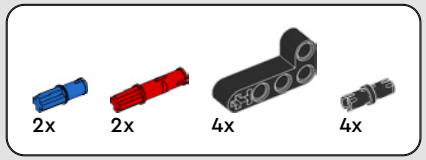

241

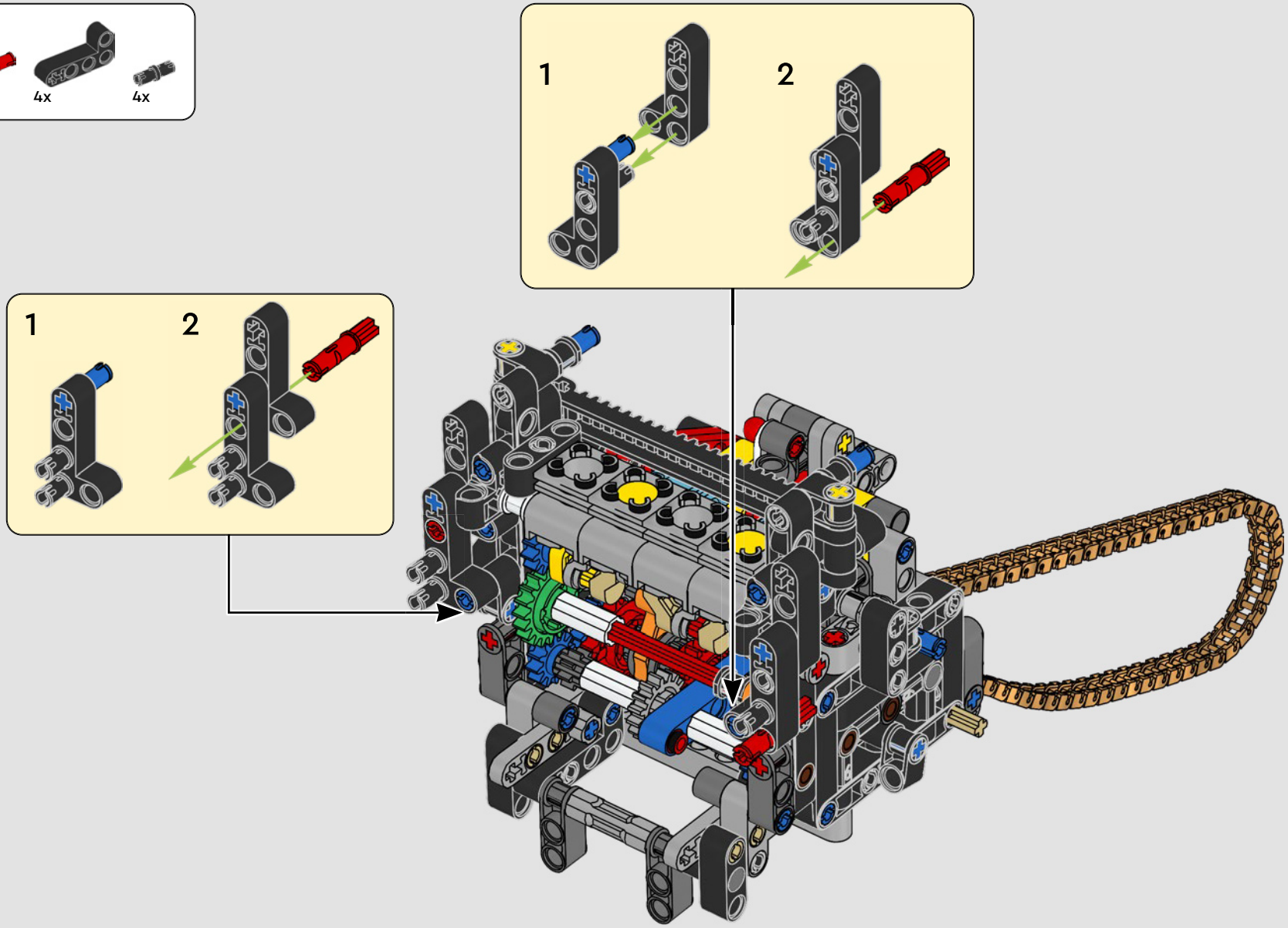

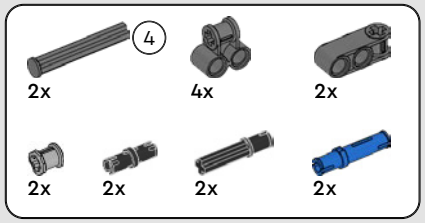

242

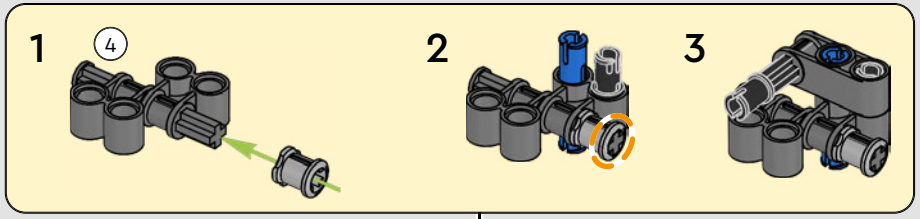

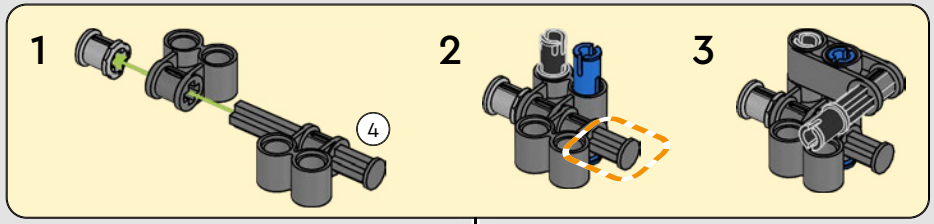

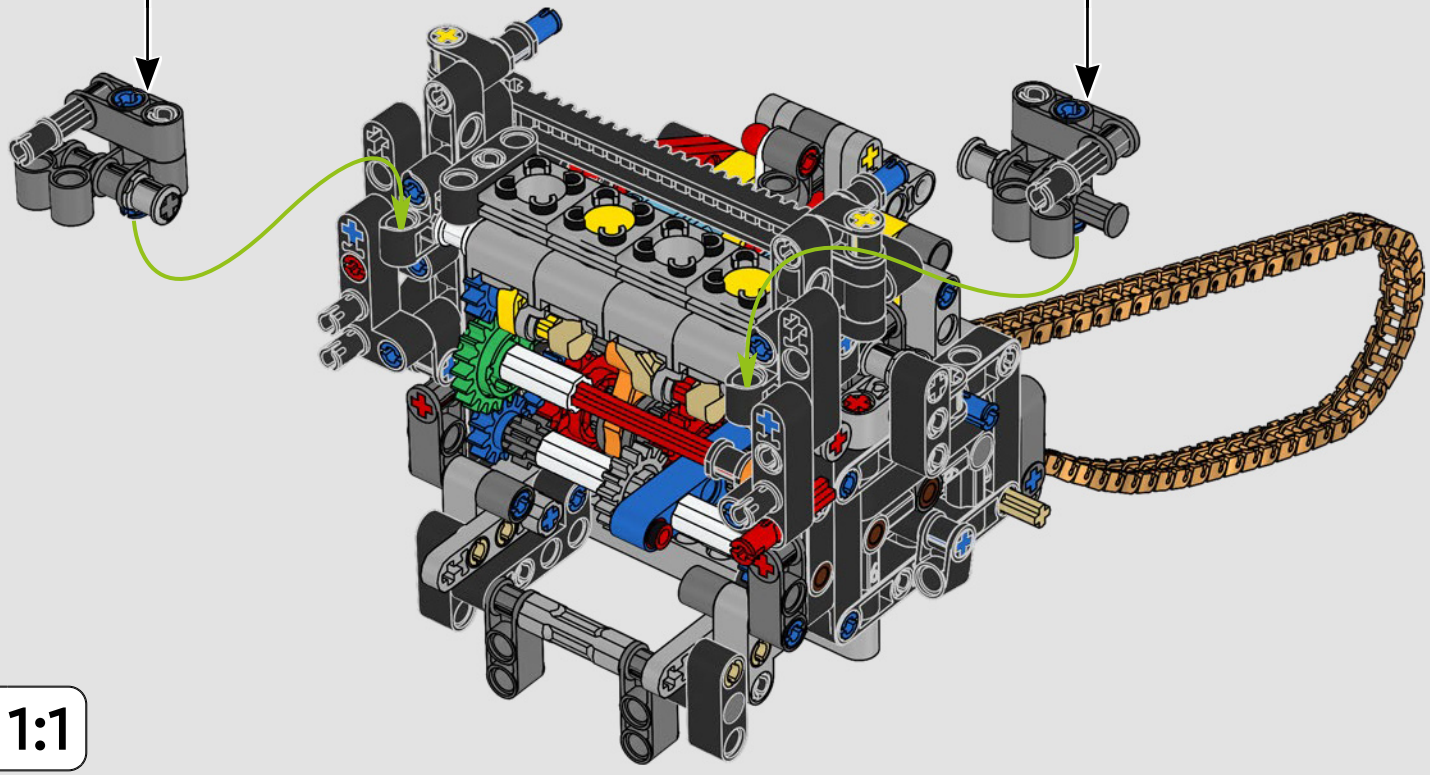

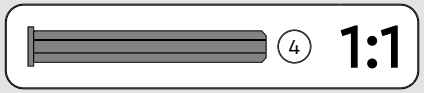

243

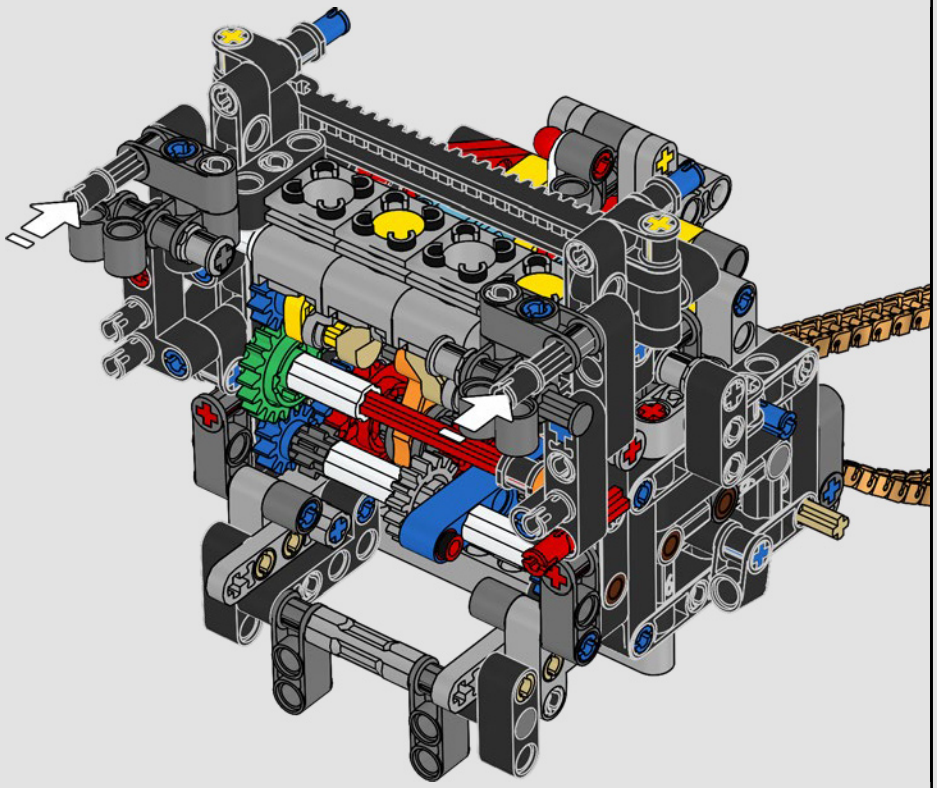

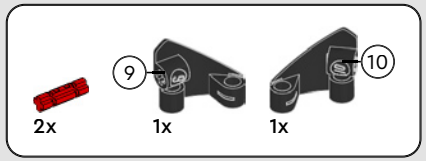

244

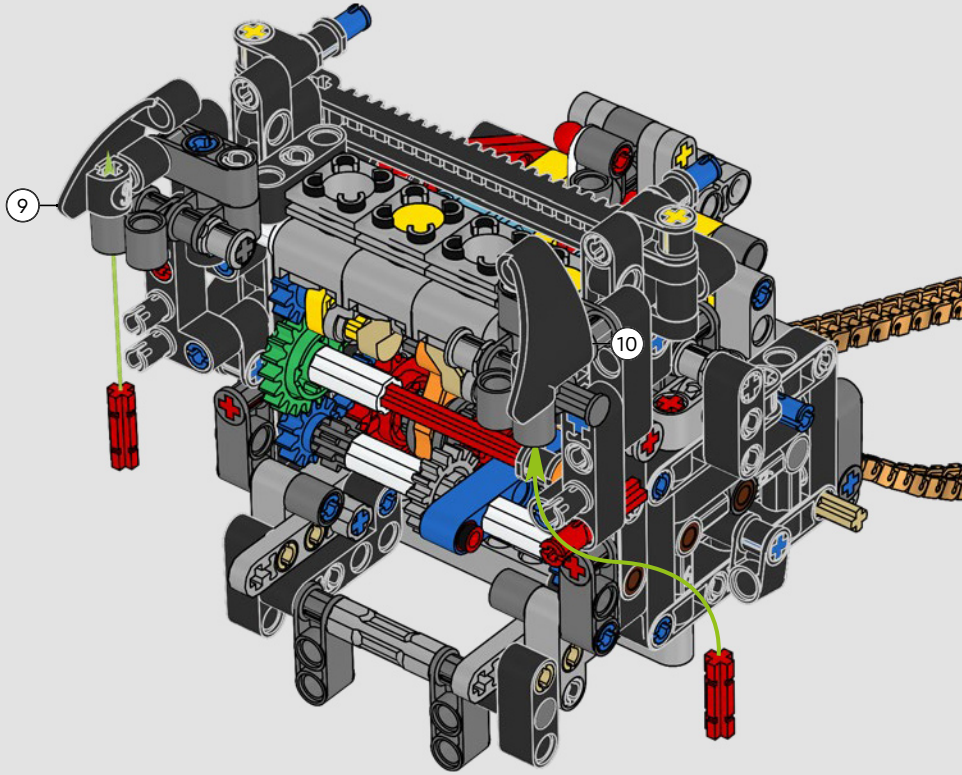

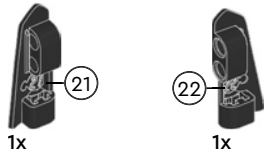

245

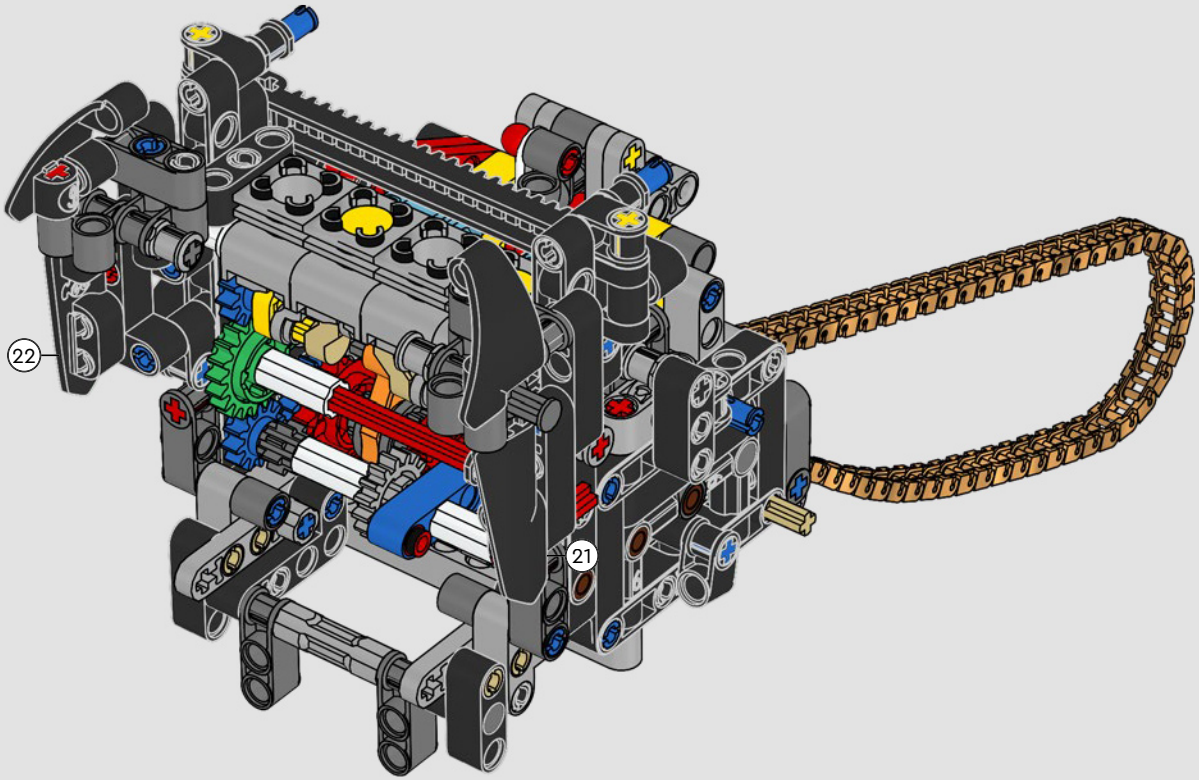

2x

246

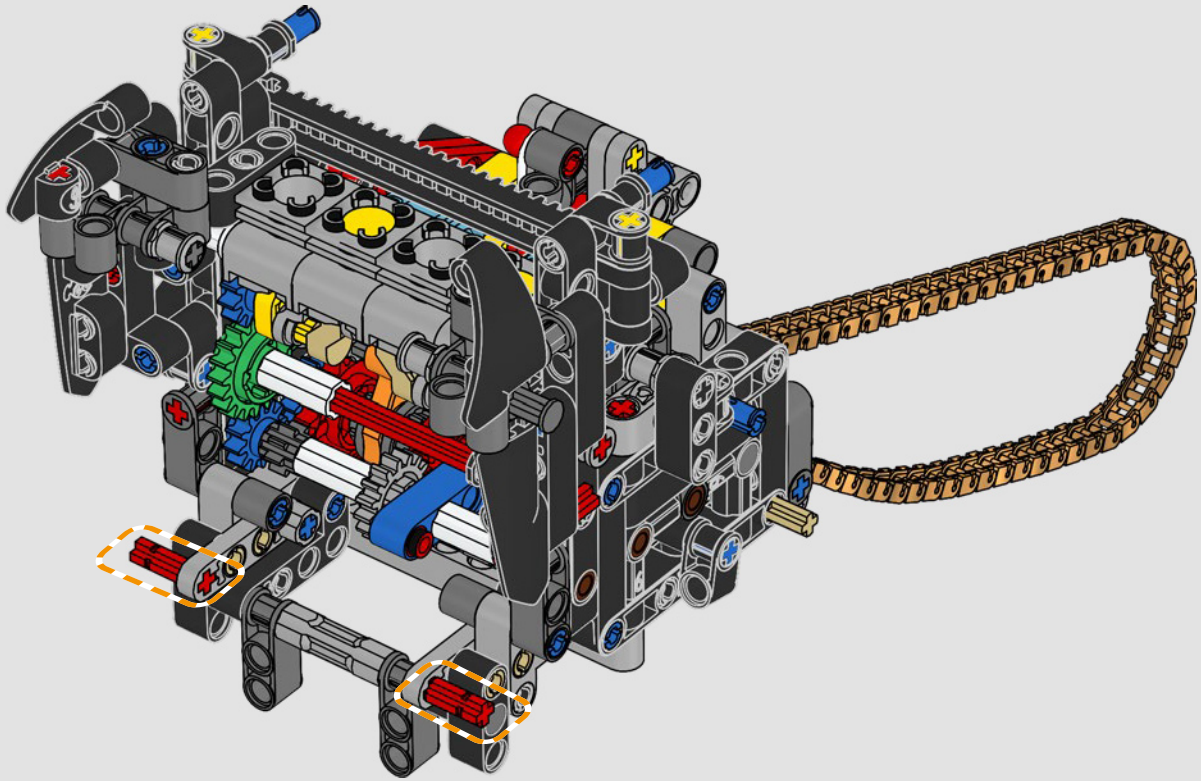

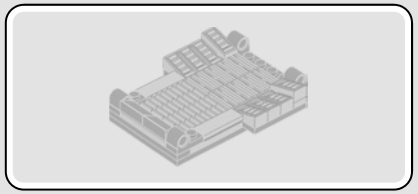

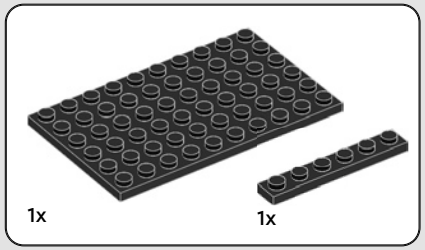

247

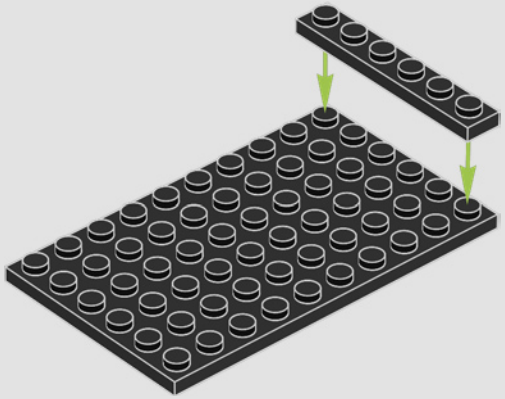

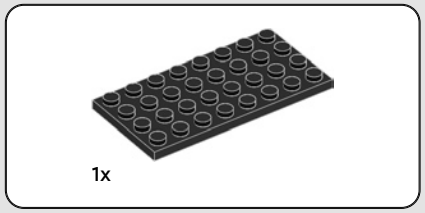

248

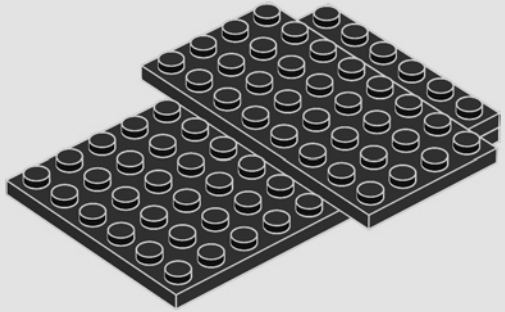

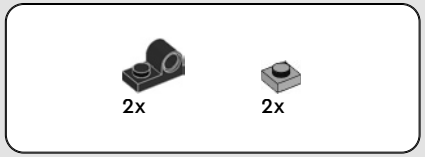

249

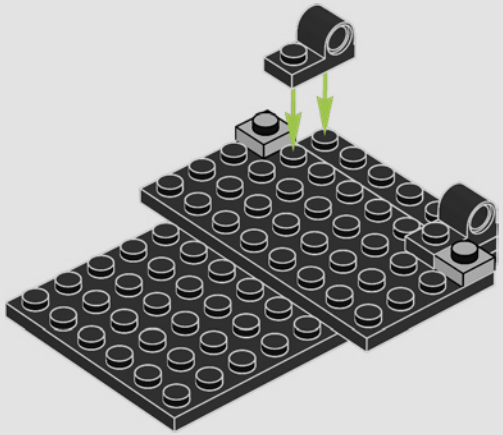

250

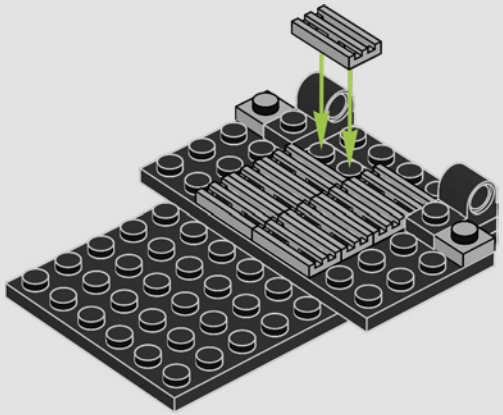

251

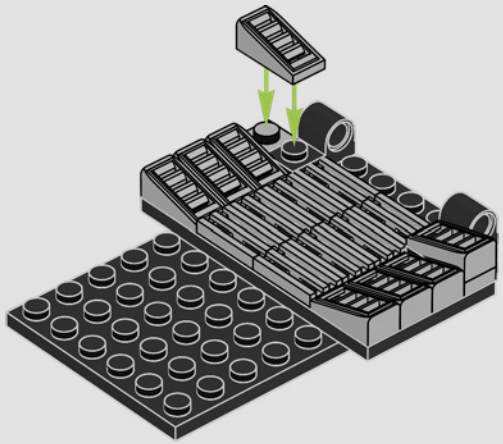

252

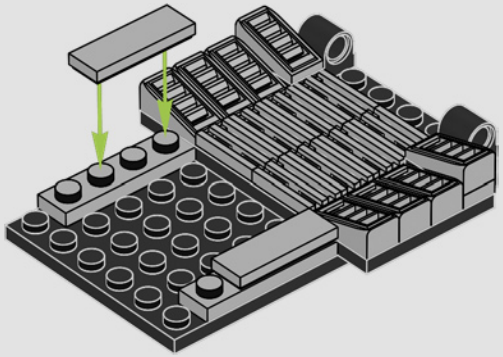

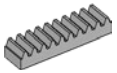

253

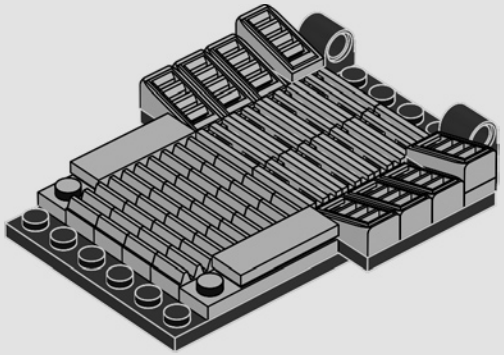

254

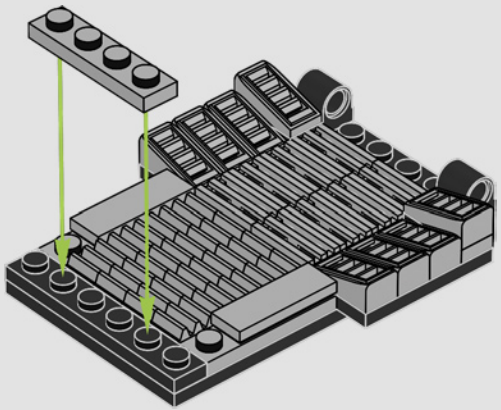

255

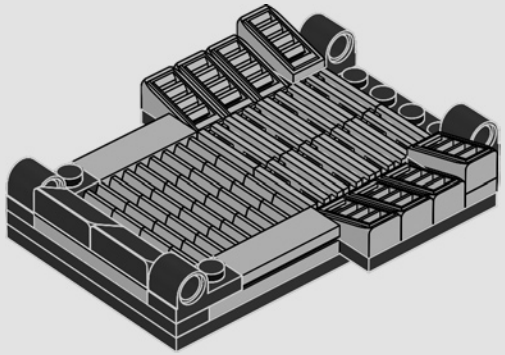

256

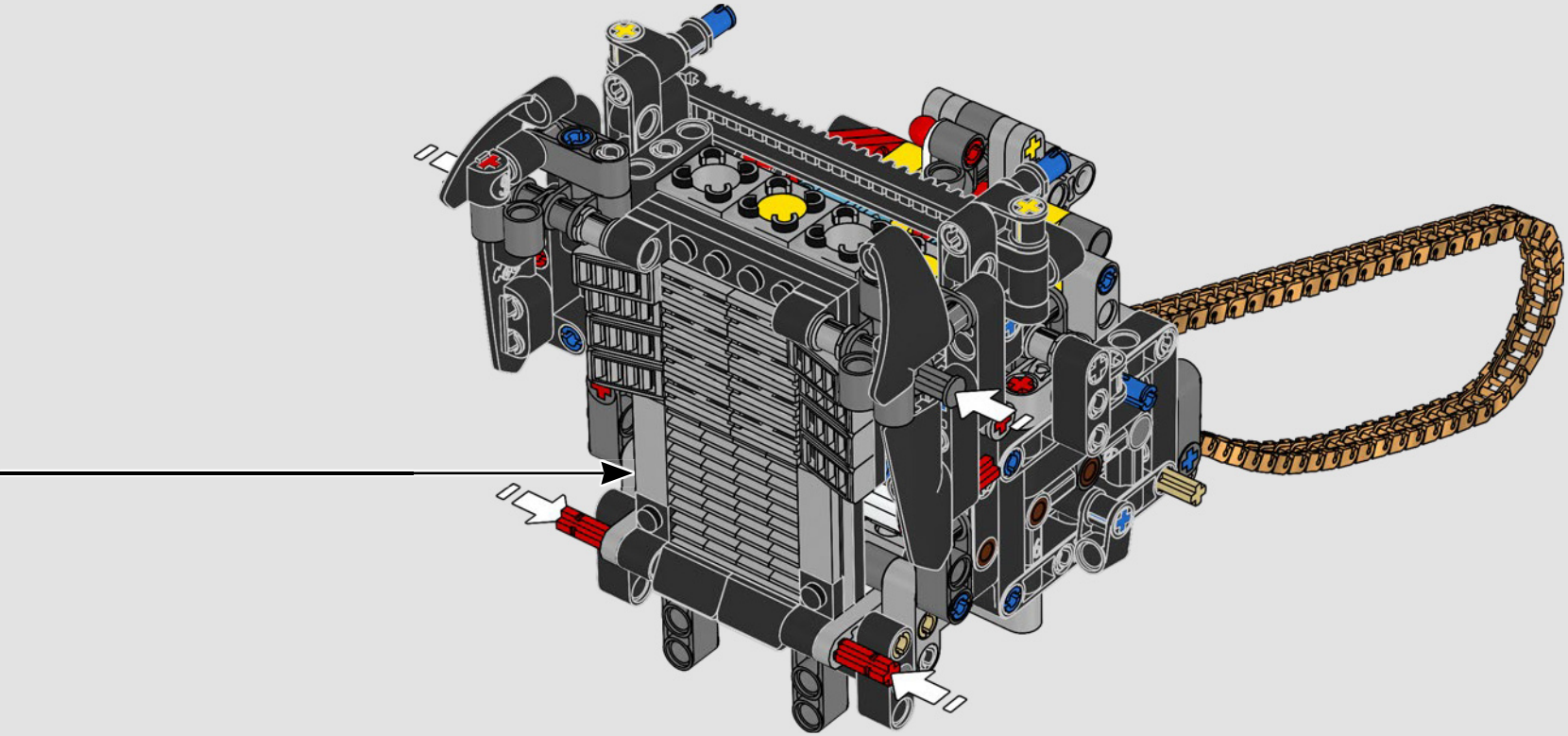

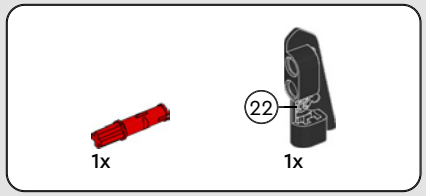

257

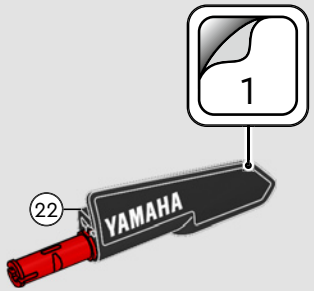

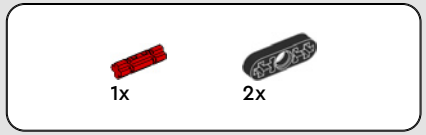

258

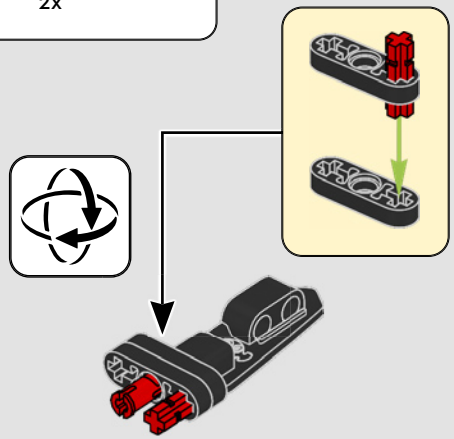

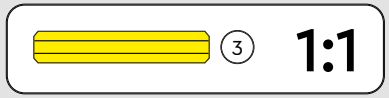

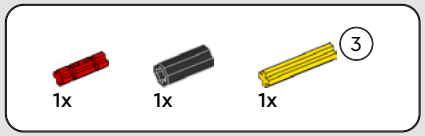

259

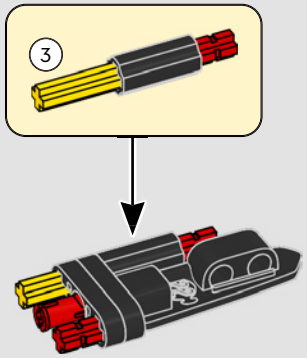

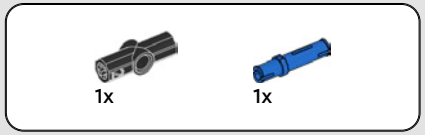

260

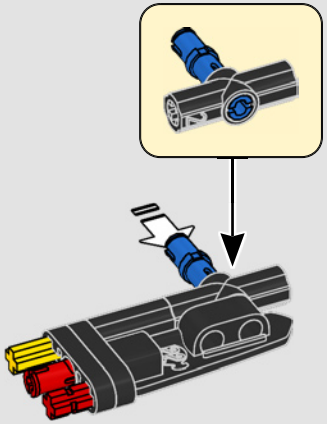

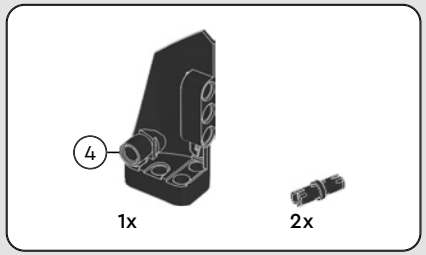

261

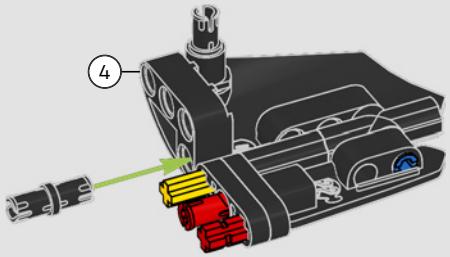

262

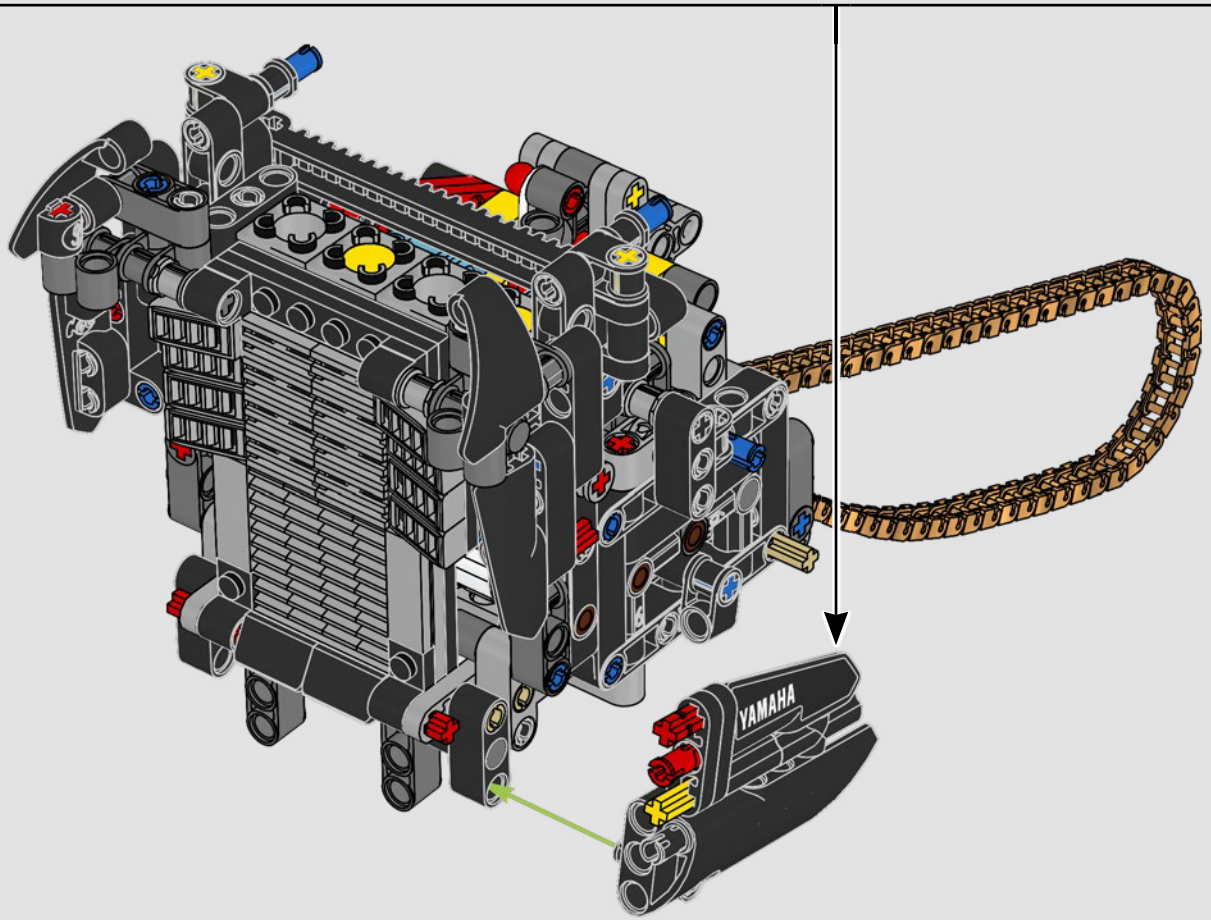

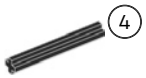

263

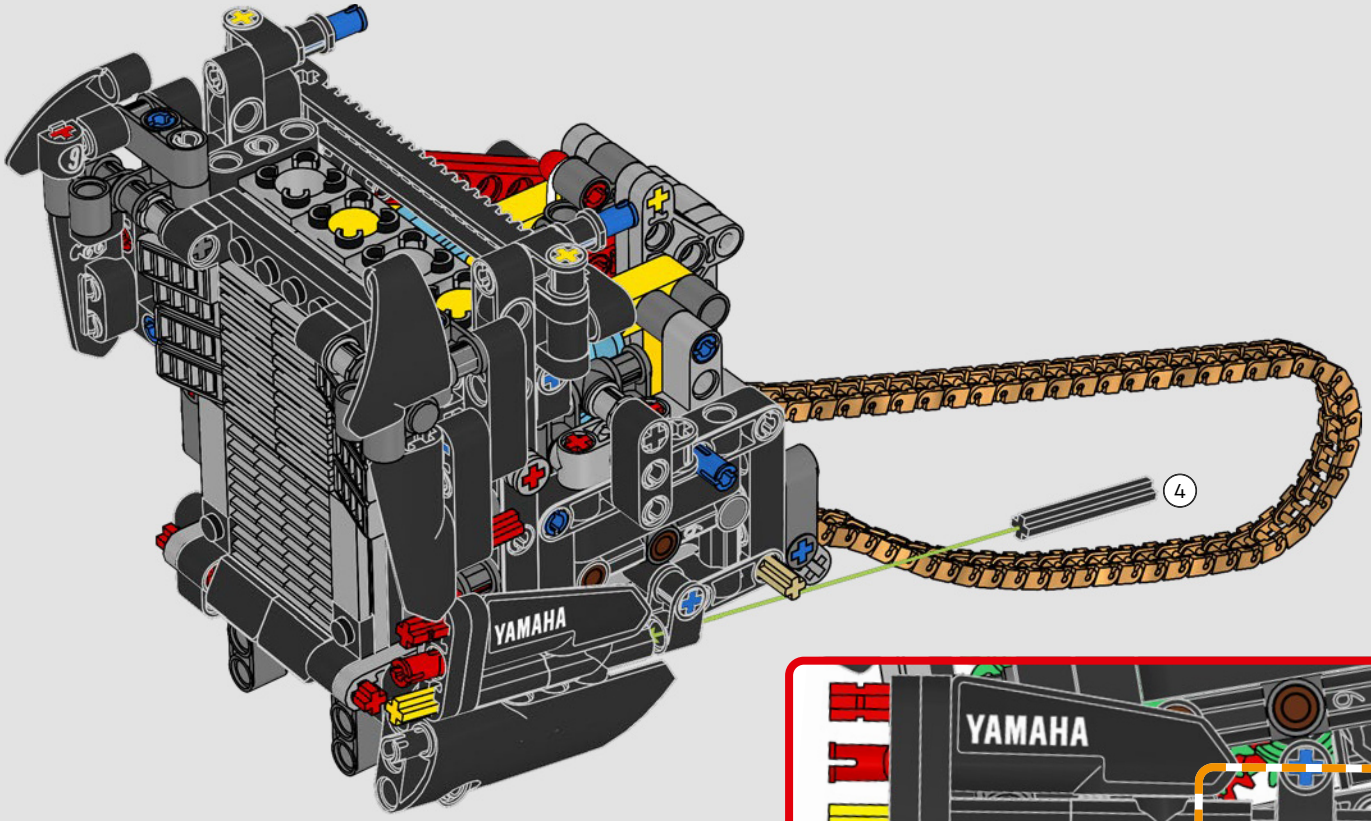

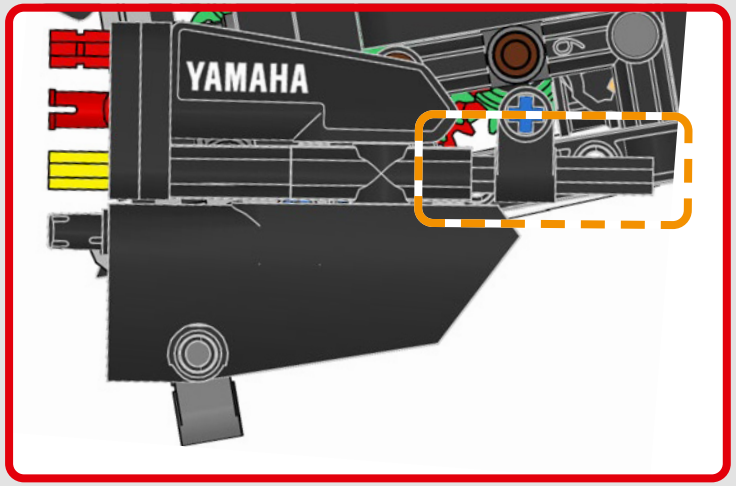

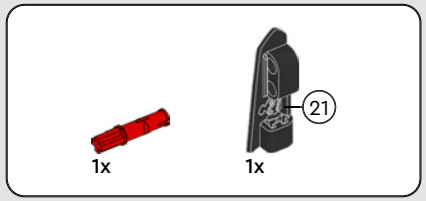

264

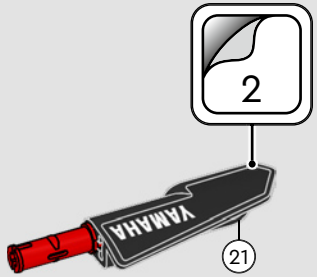

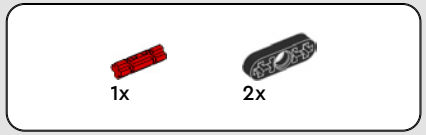

265

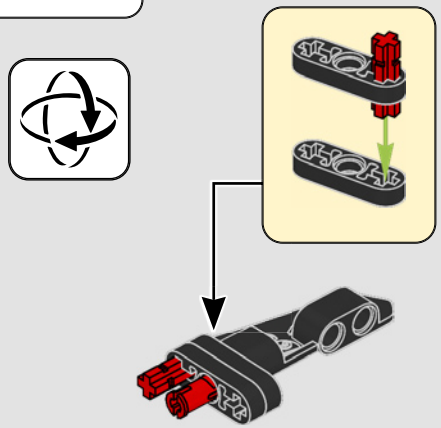

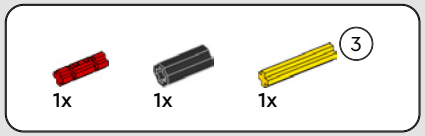

266

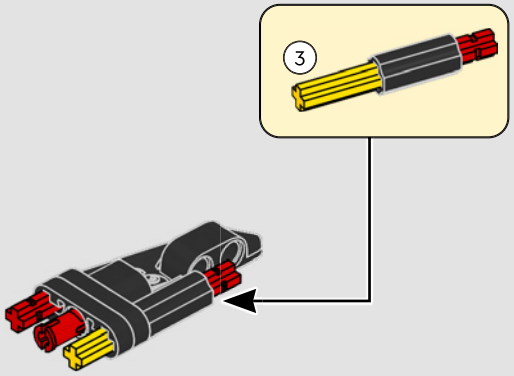

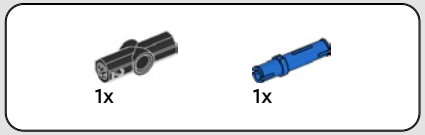

267

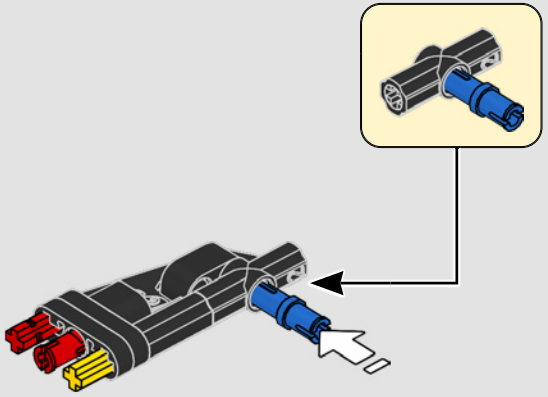

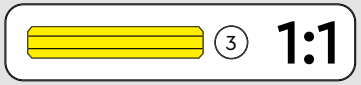

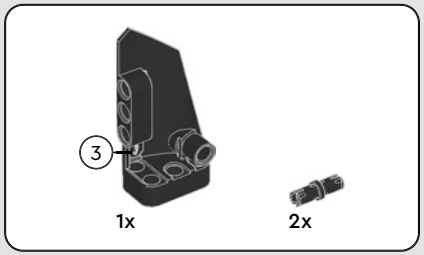

268

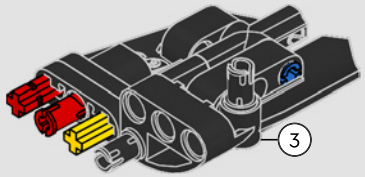

269

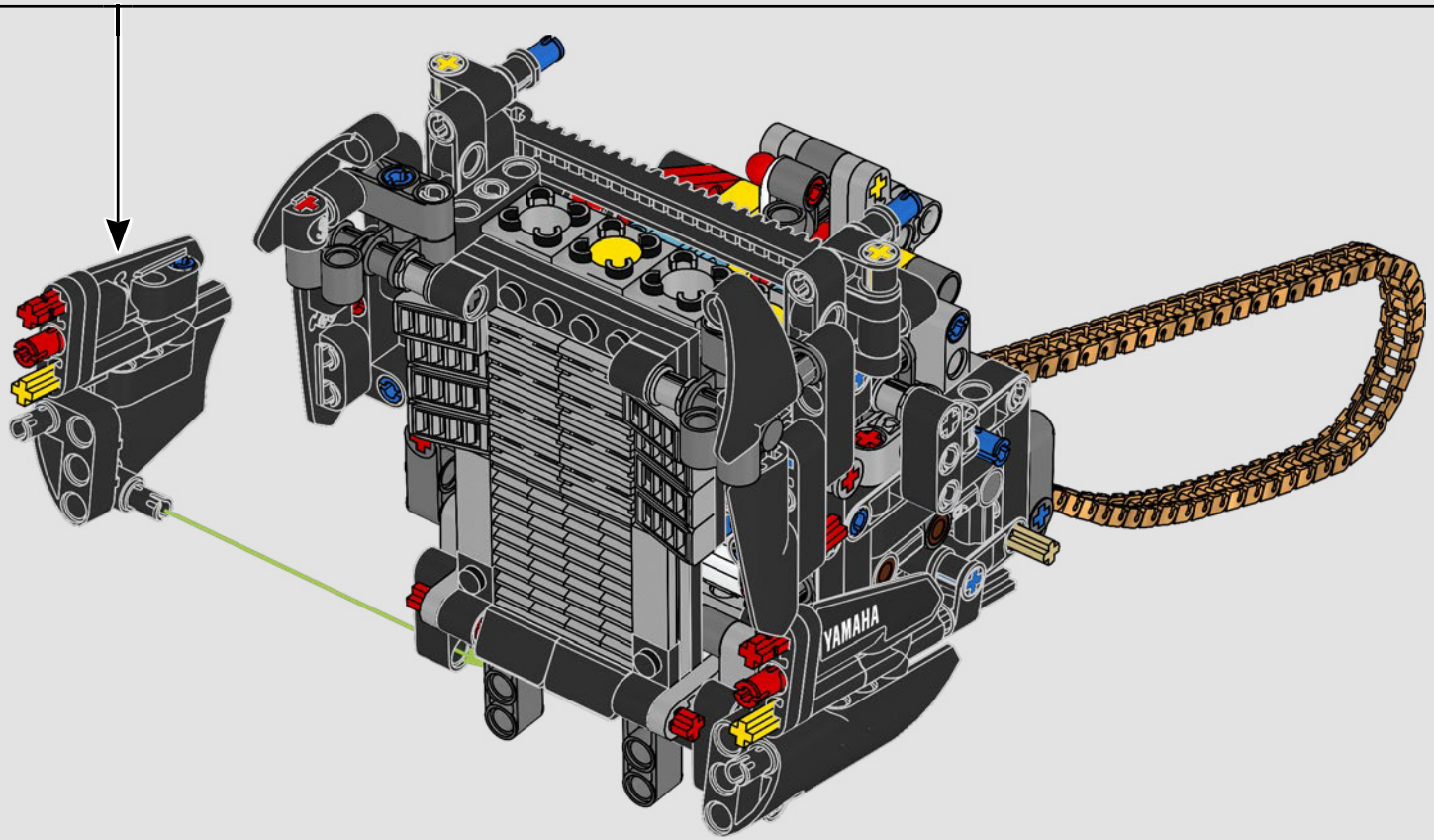

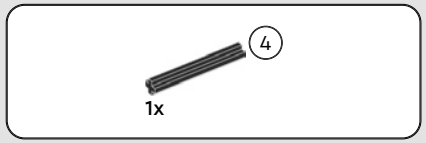

270

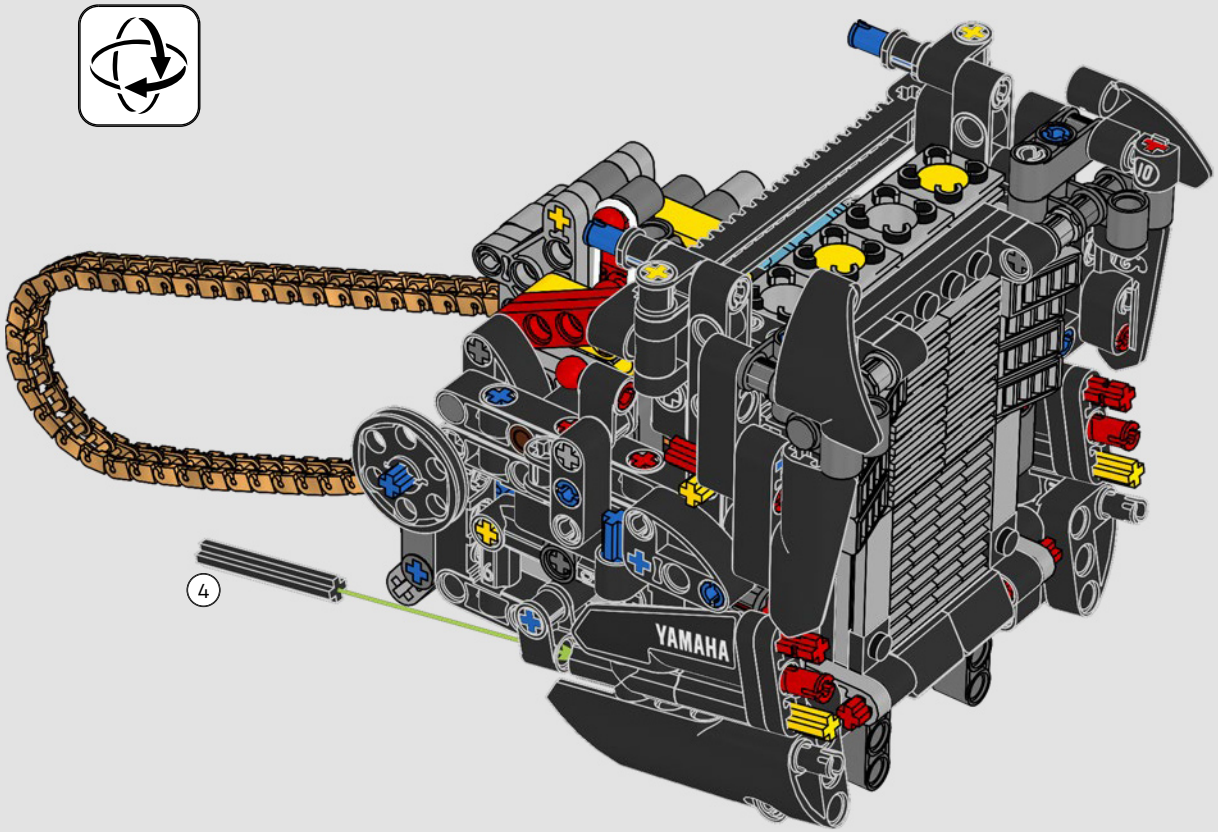

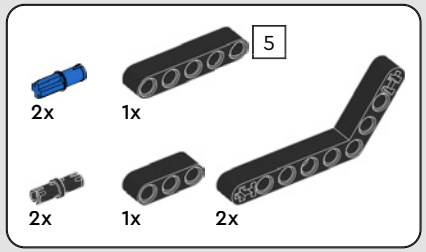

271

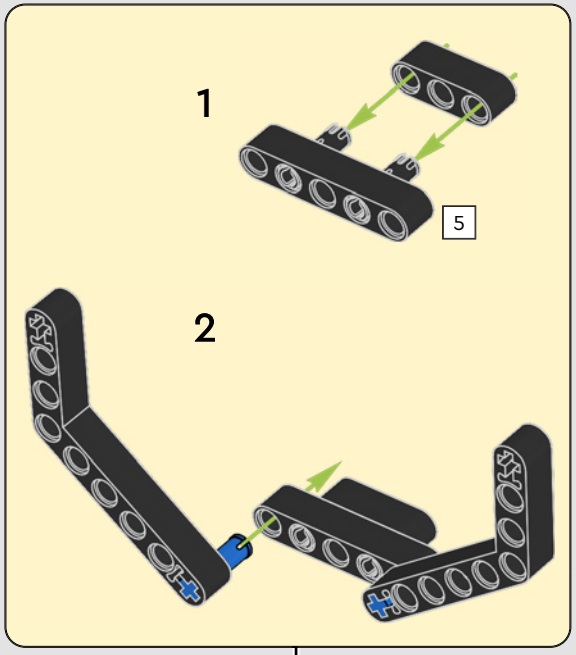

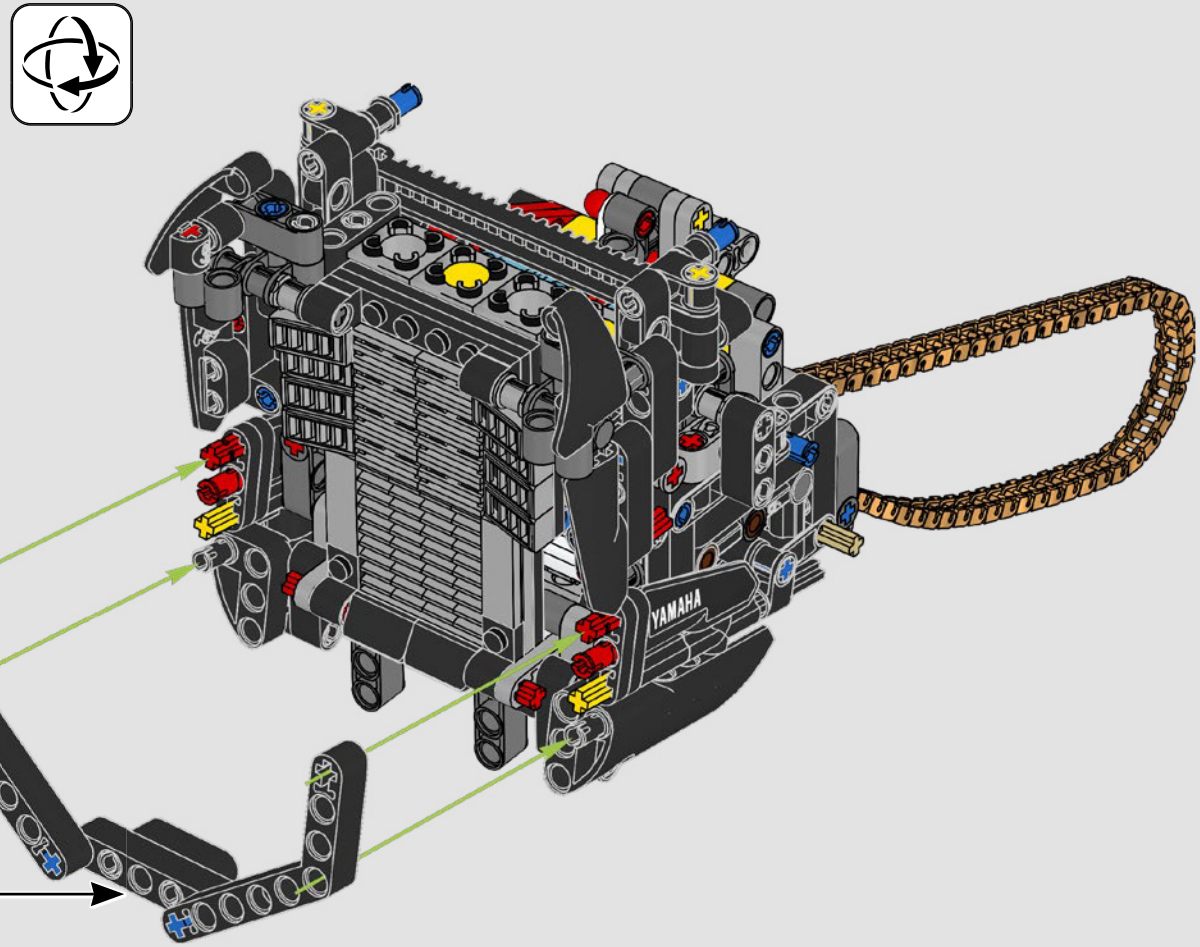

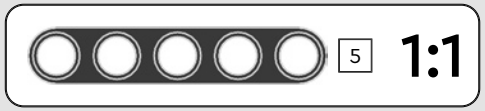

2x

272

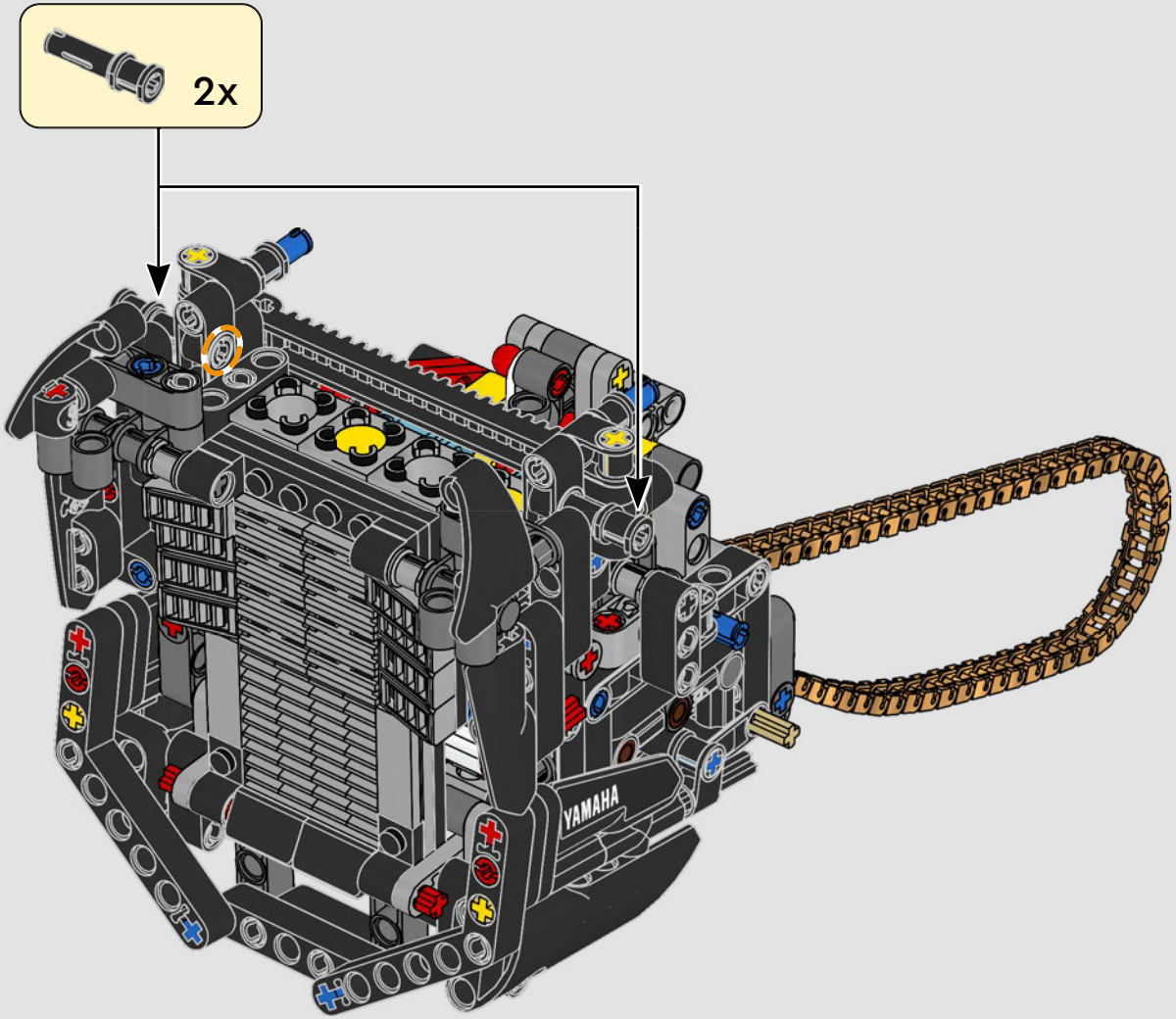

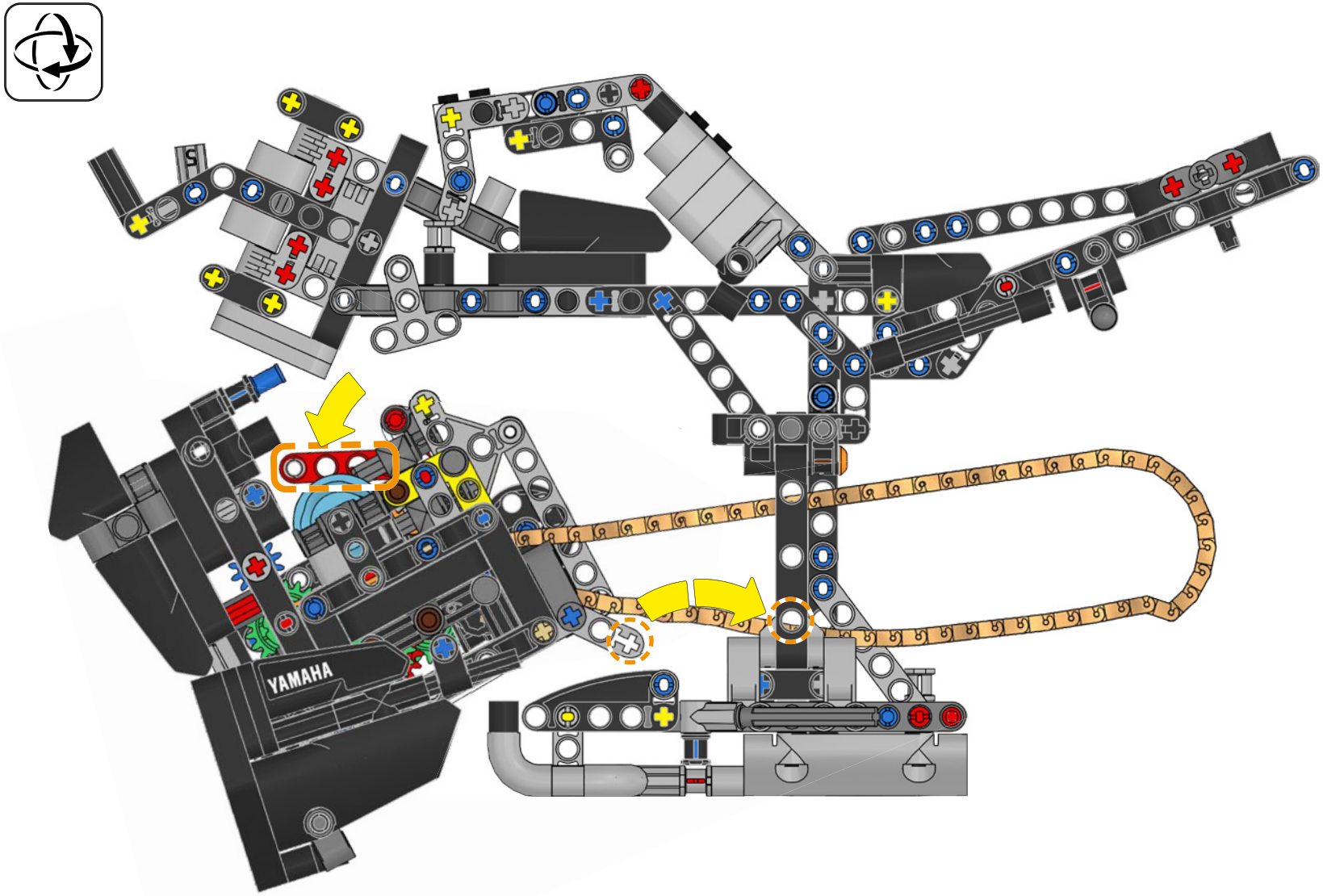
YAMAHA

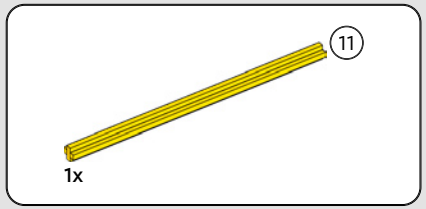

273

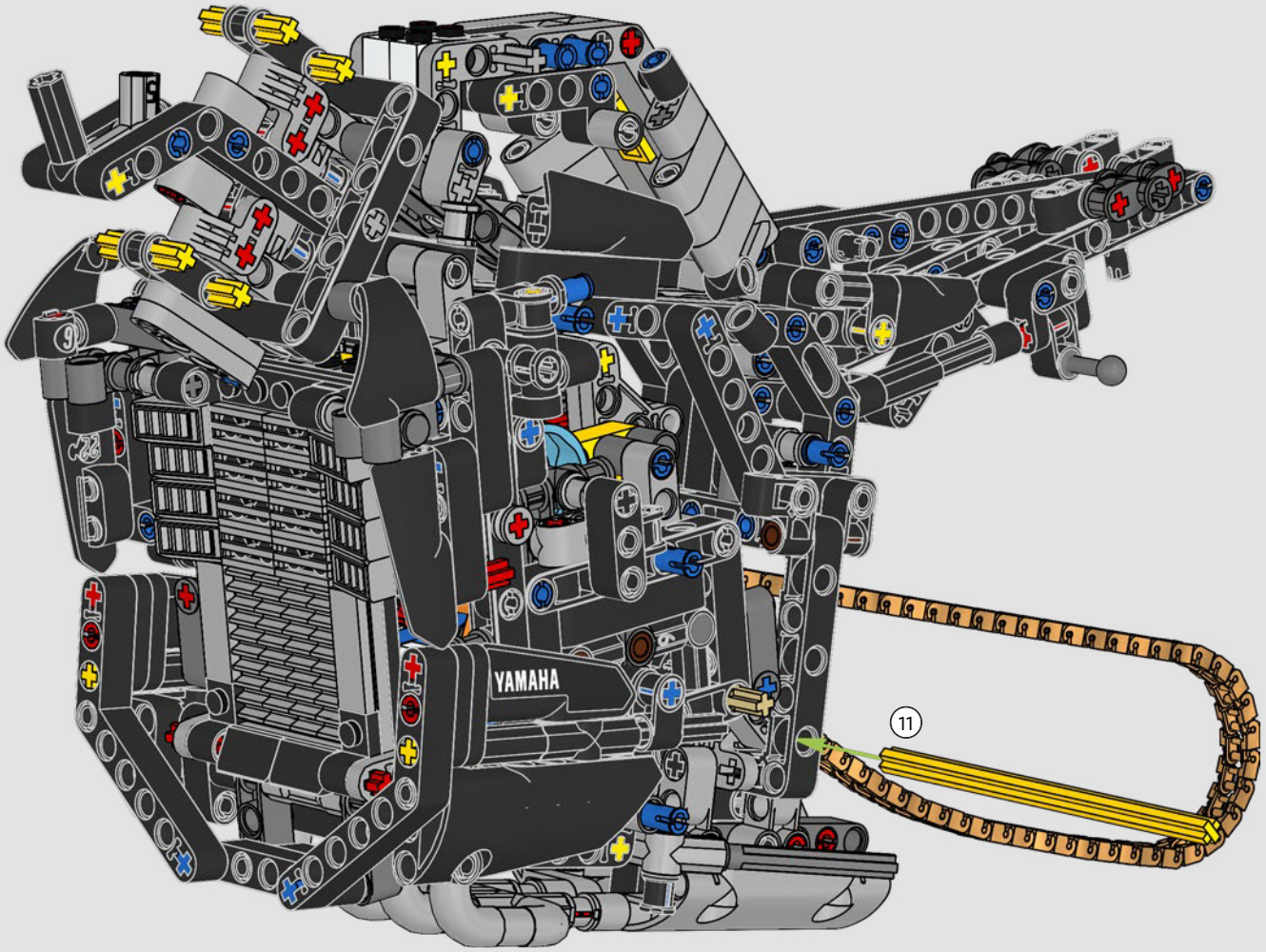

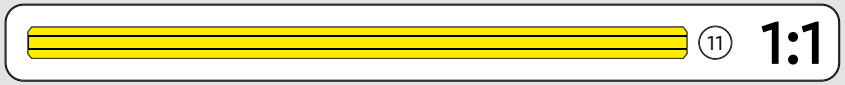

274

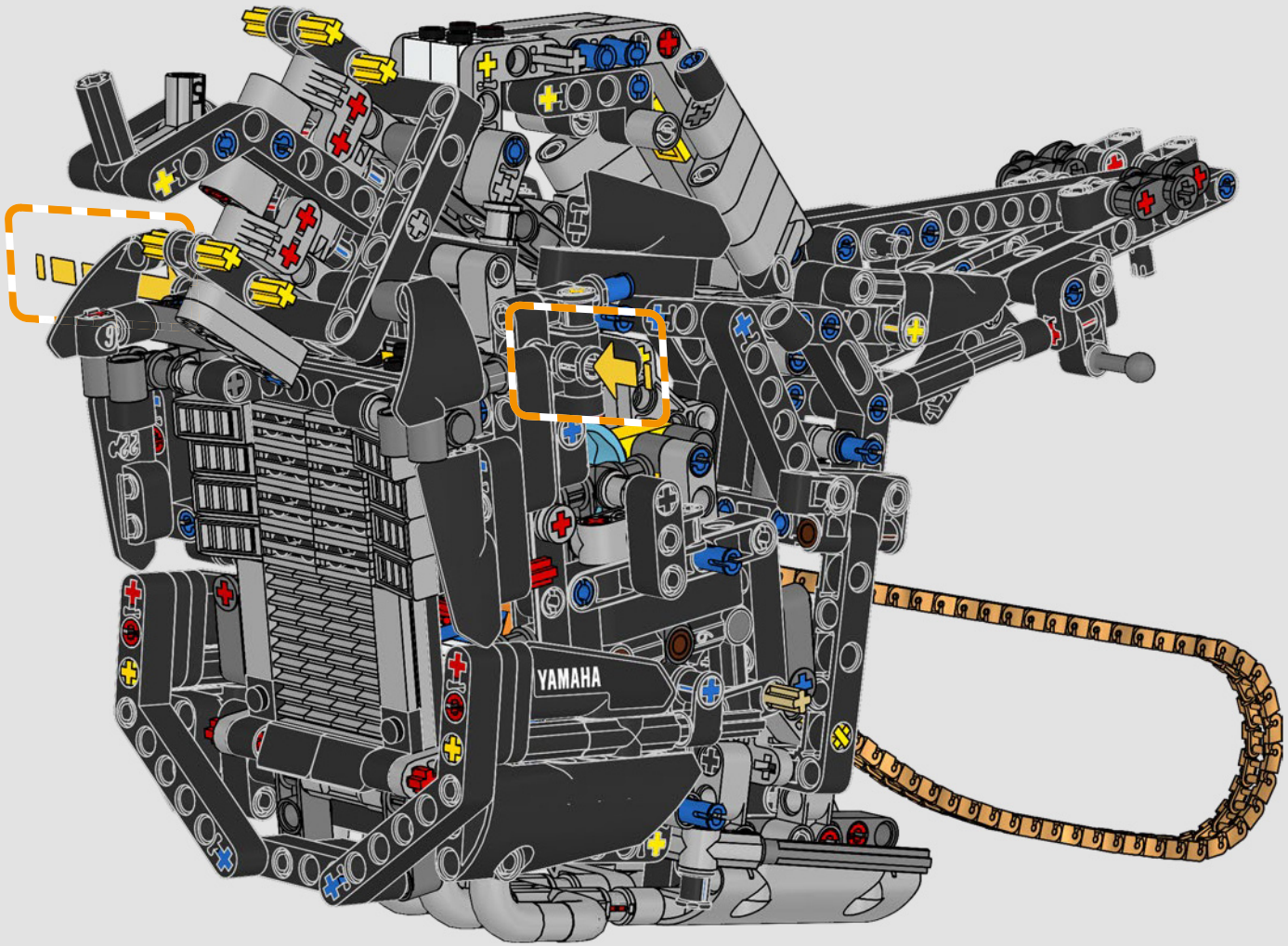

275

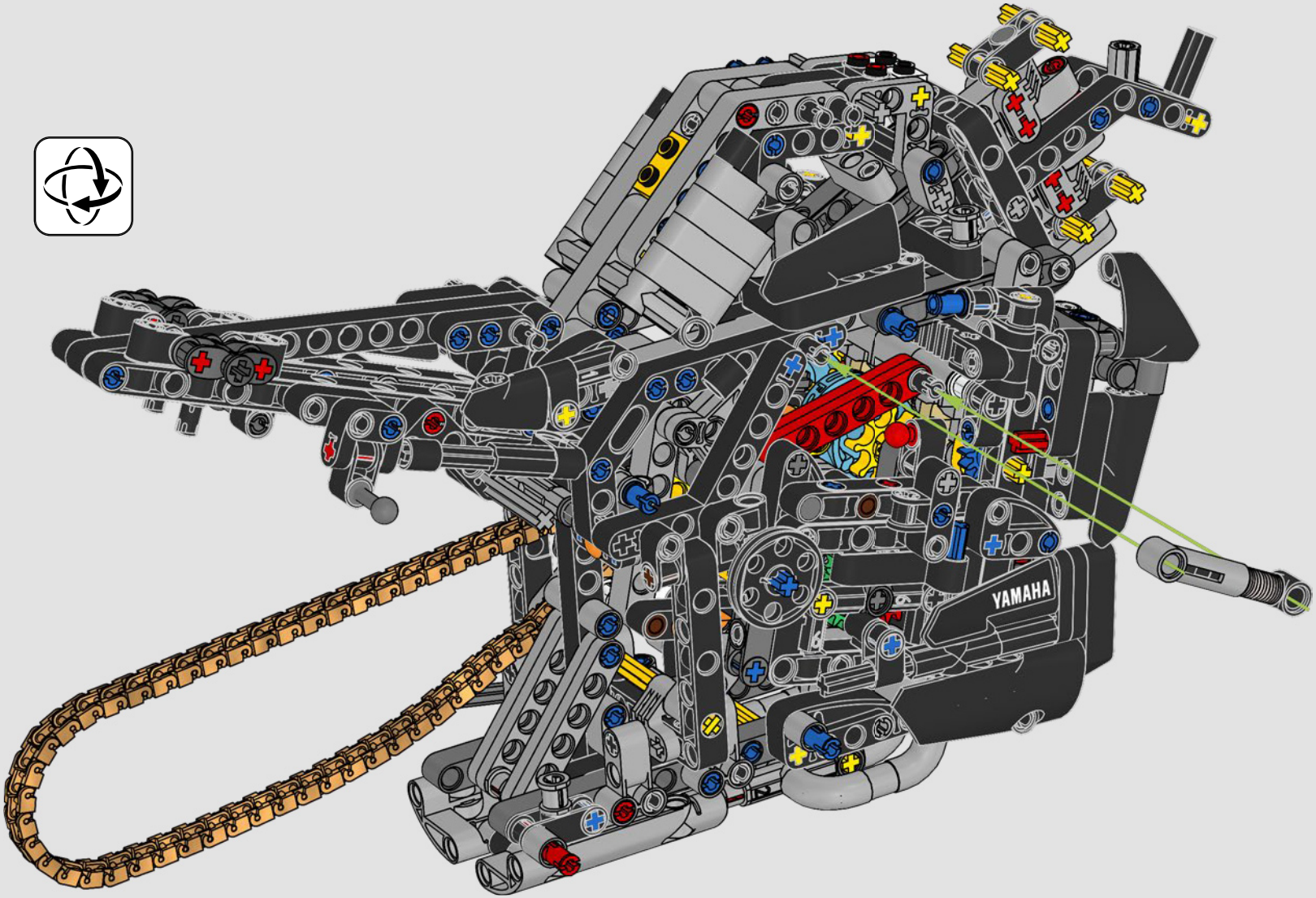

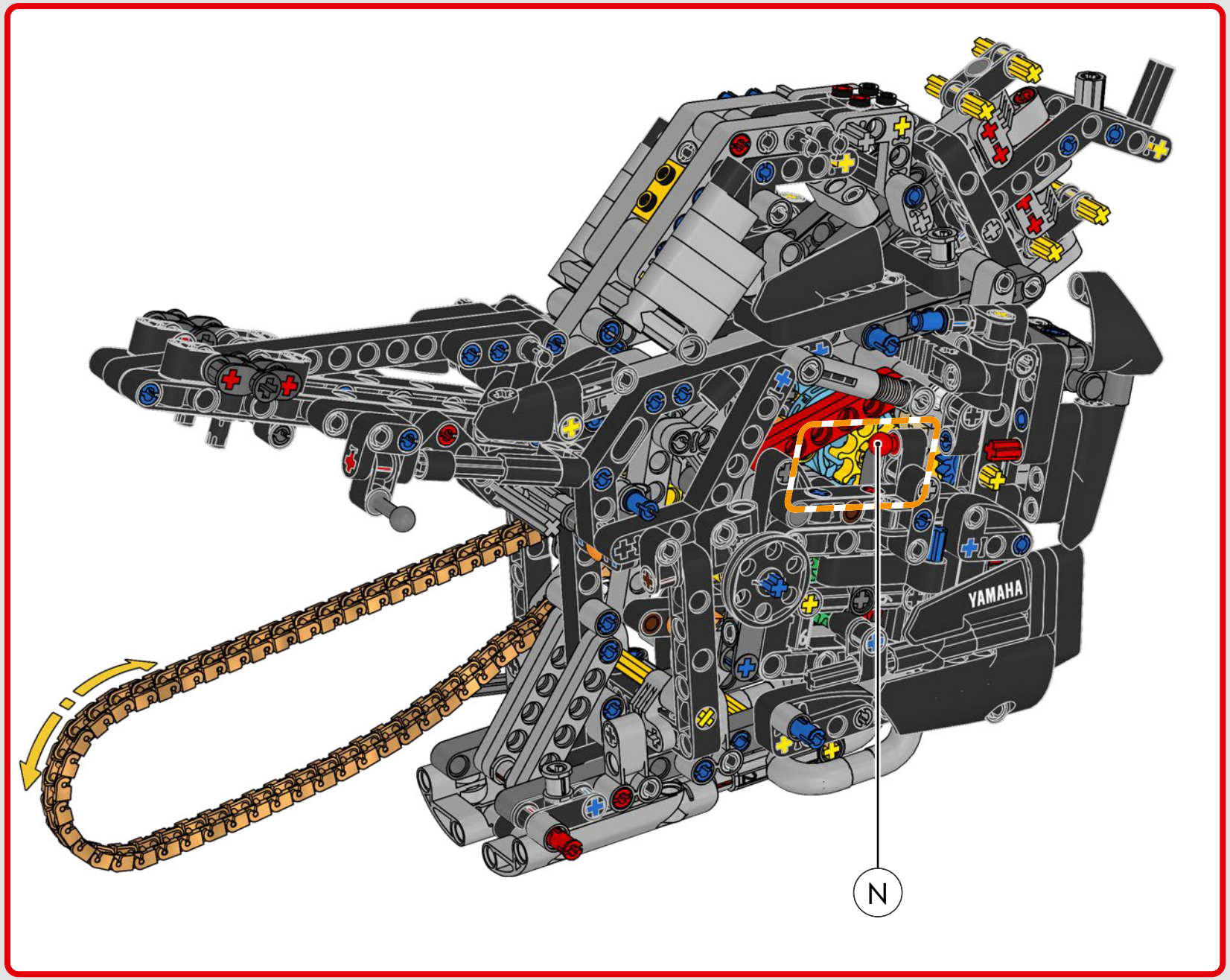
YAMAHA
N

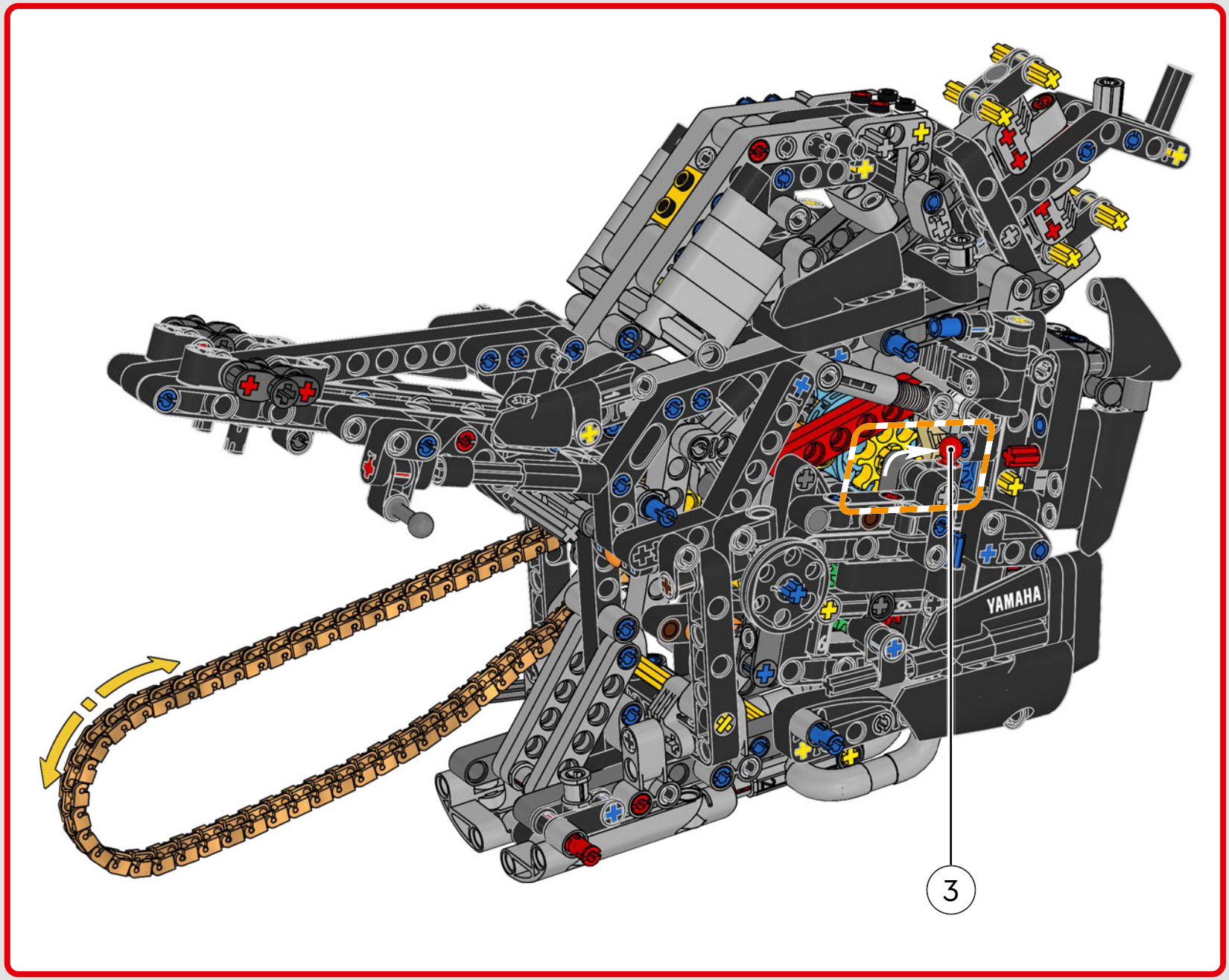
YAMAHA
3

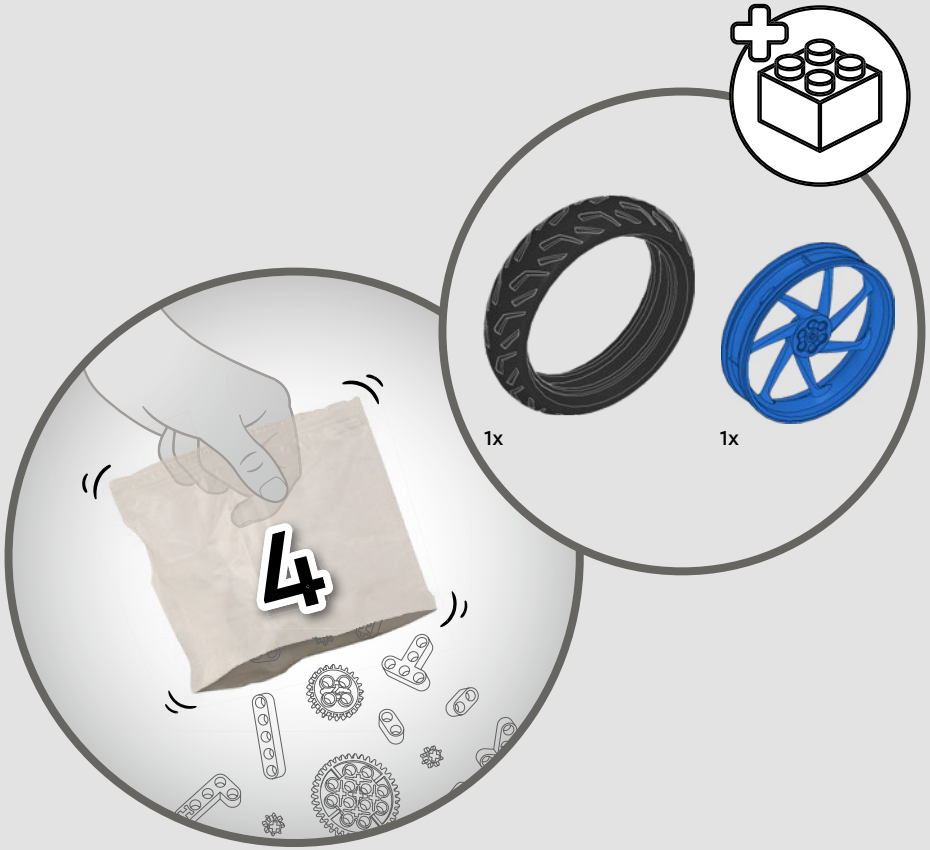

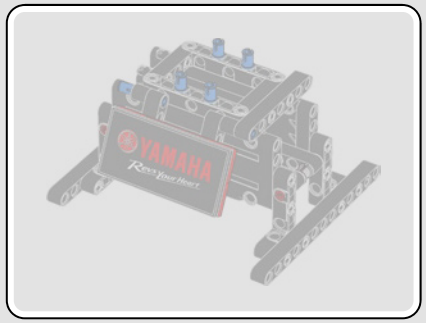

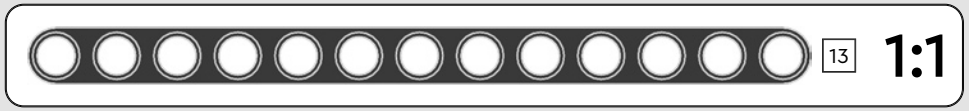

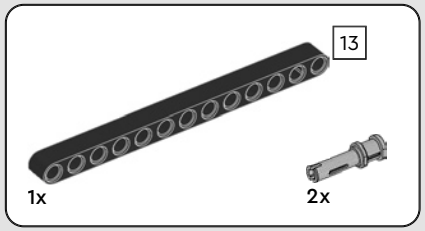

276

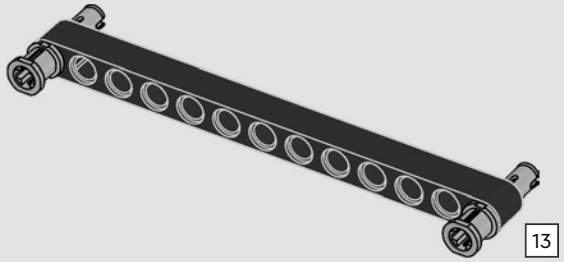

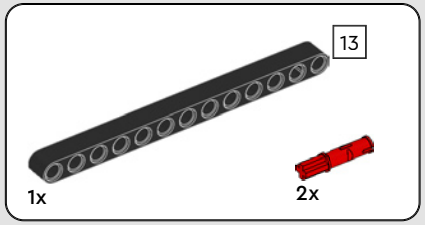

277

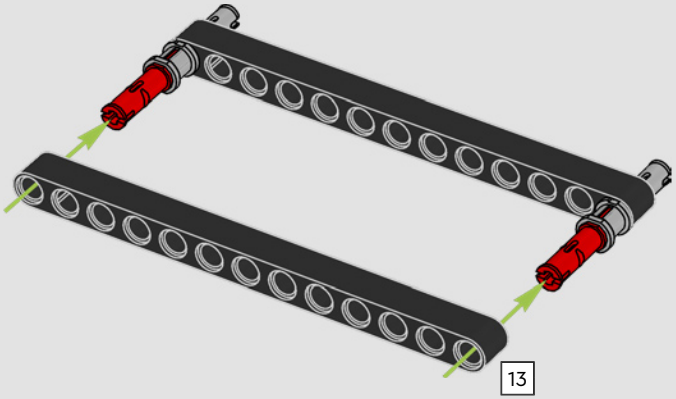

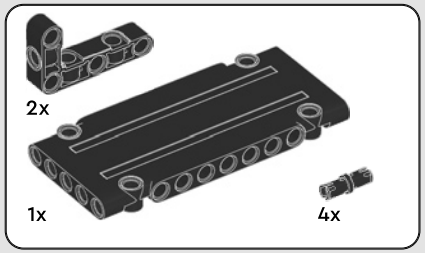

278

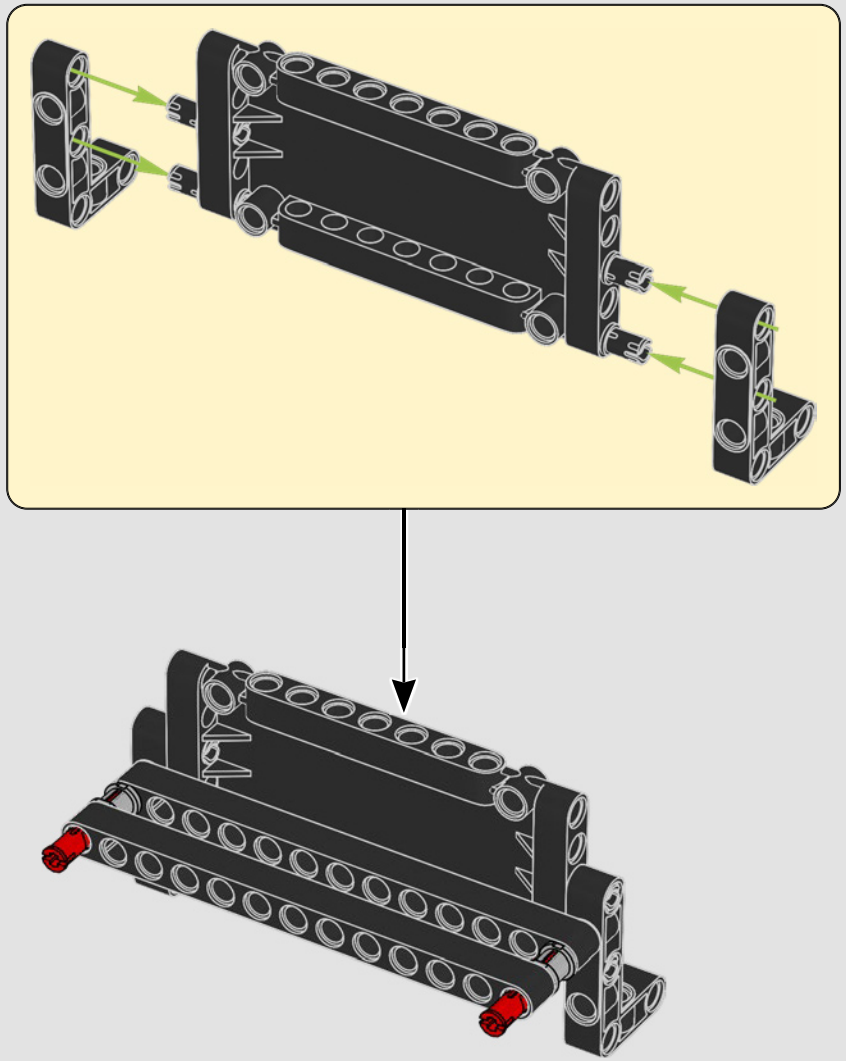

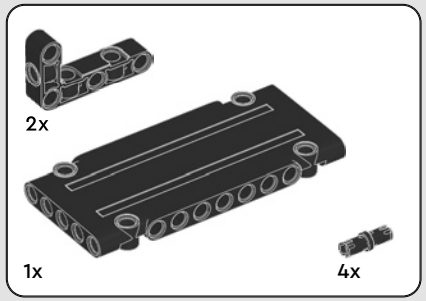

279

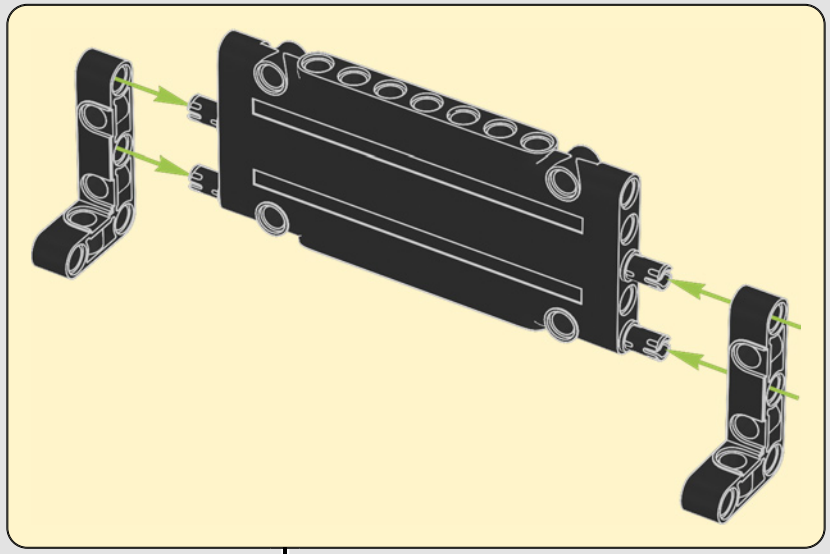

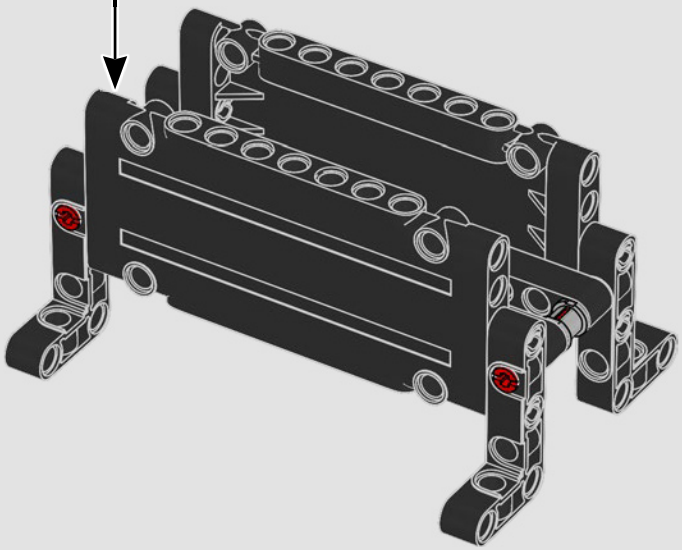

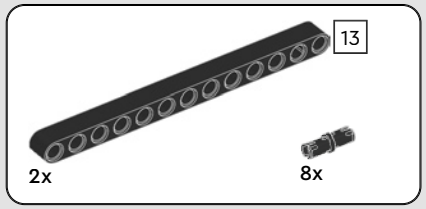

280

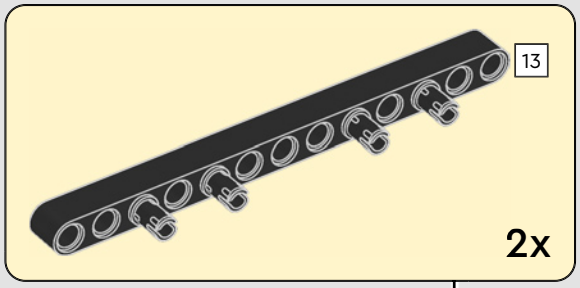

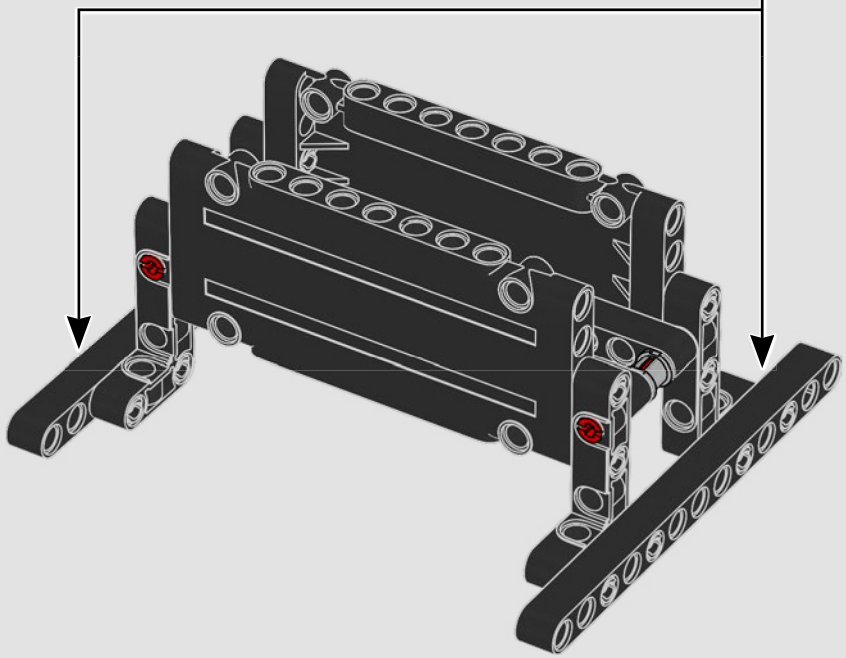

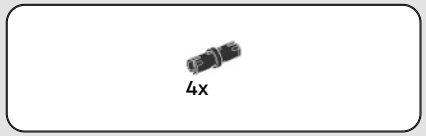

281

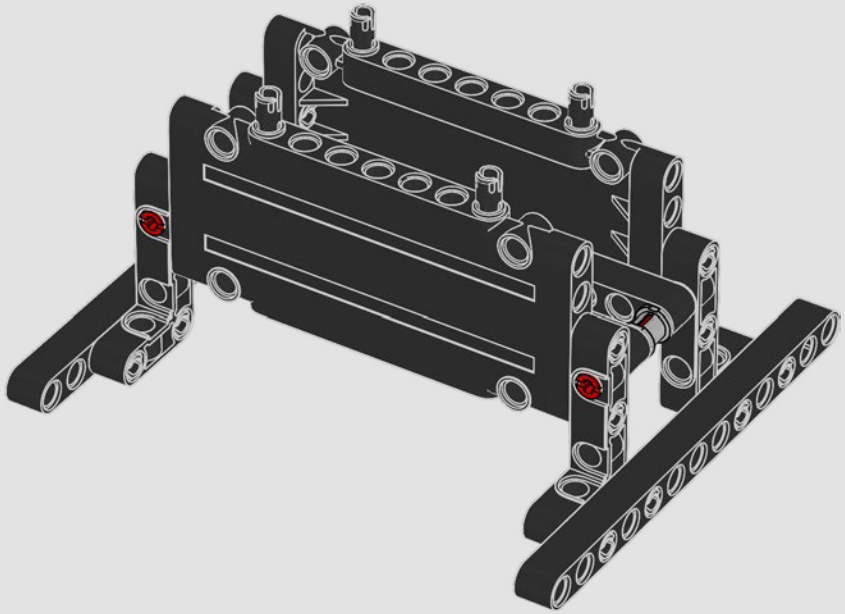

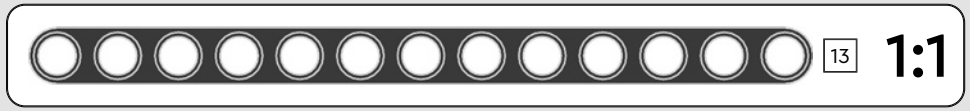

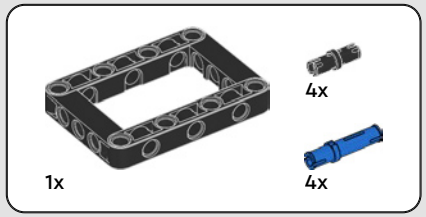

282

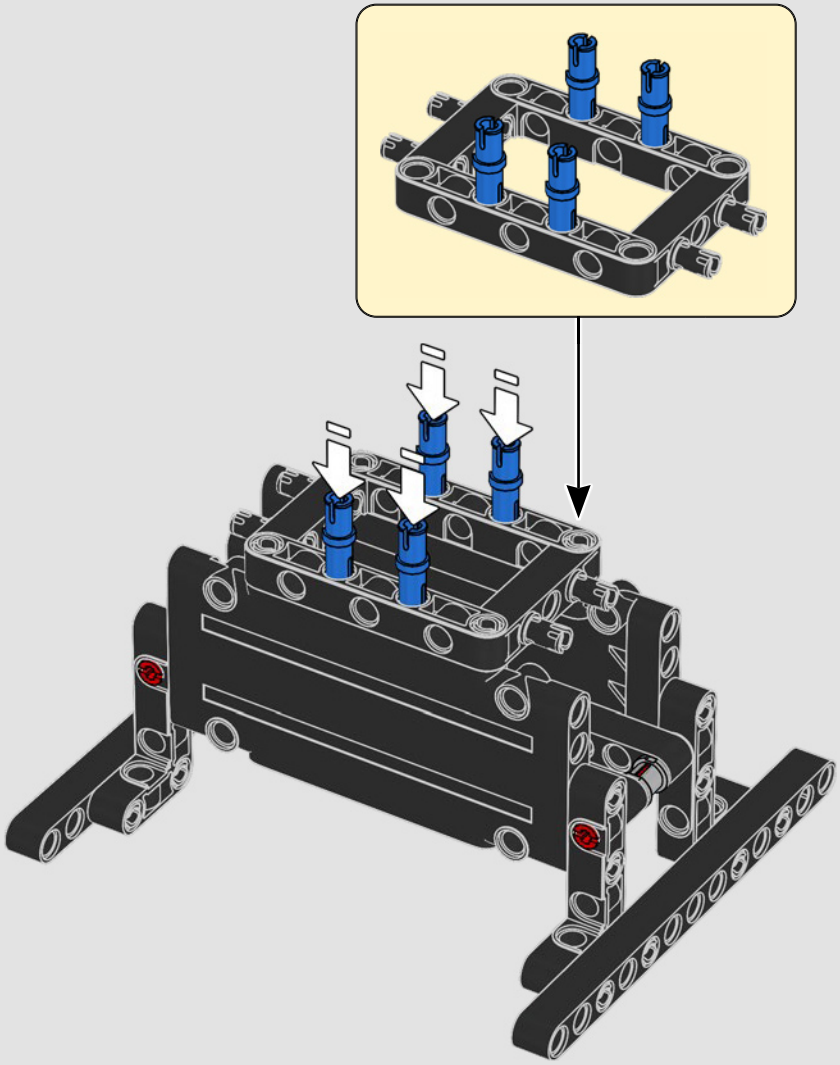

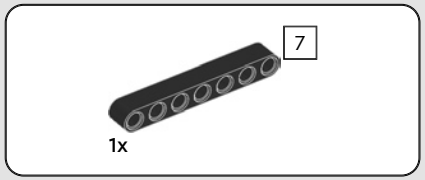

283

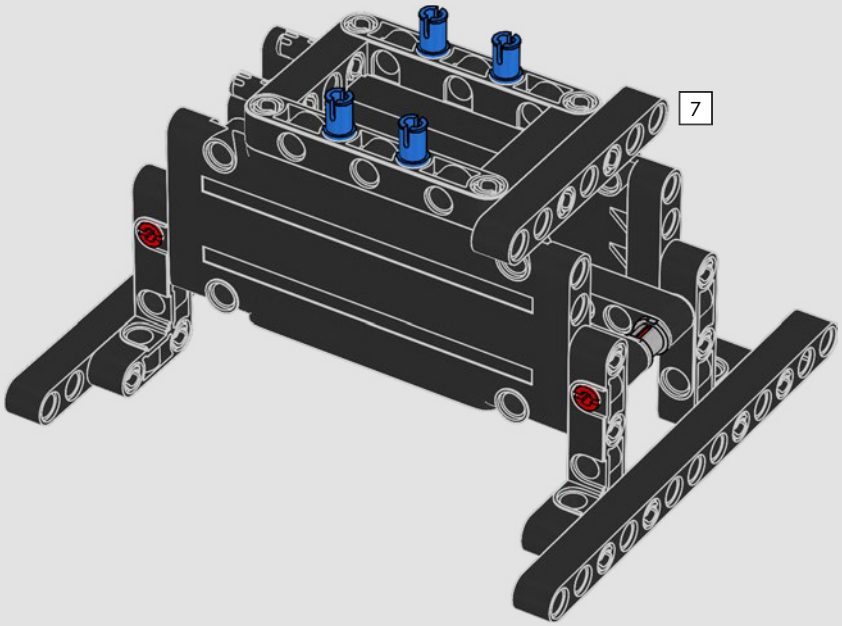

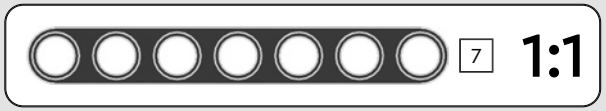

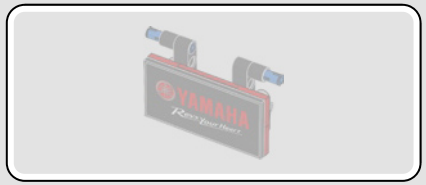

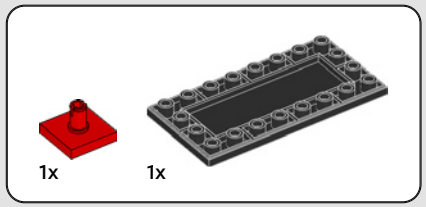

284

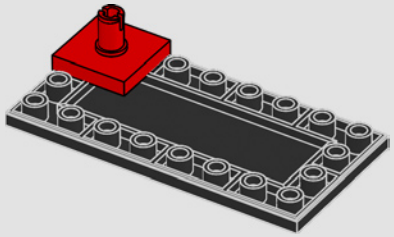

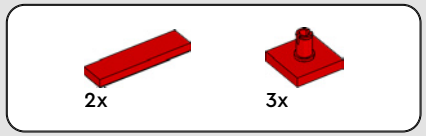

285

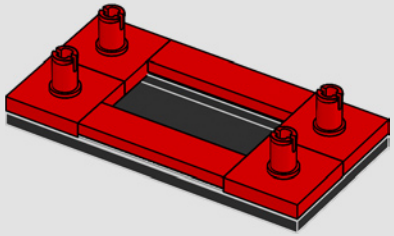

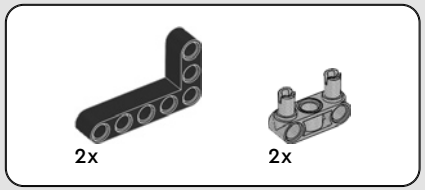

286

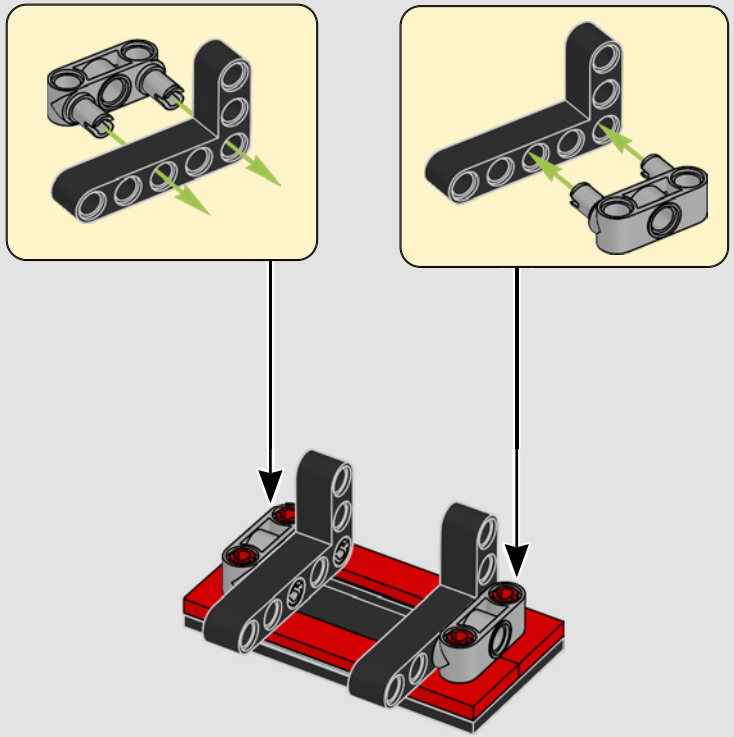

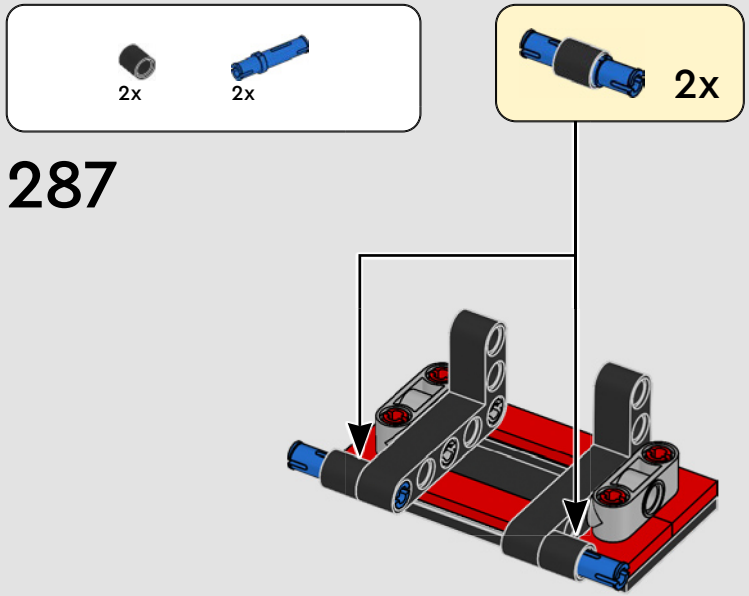

287

288

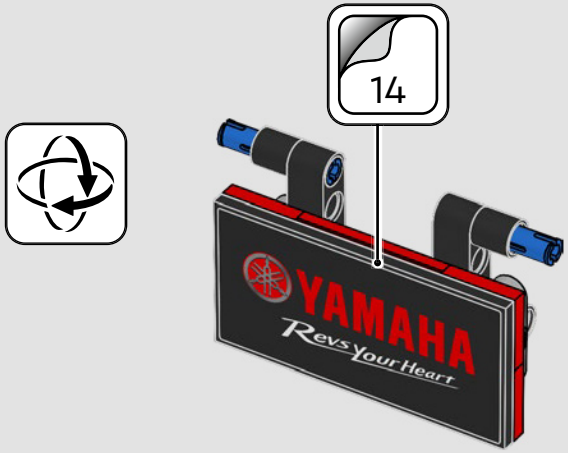

289

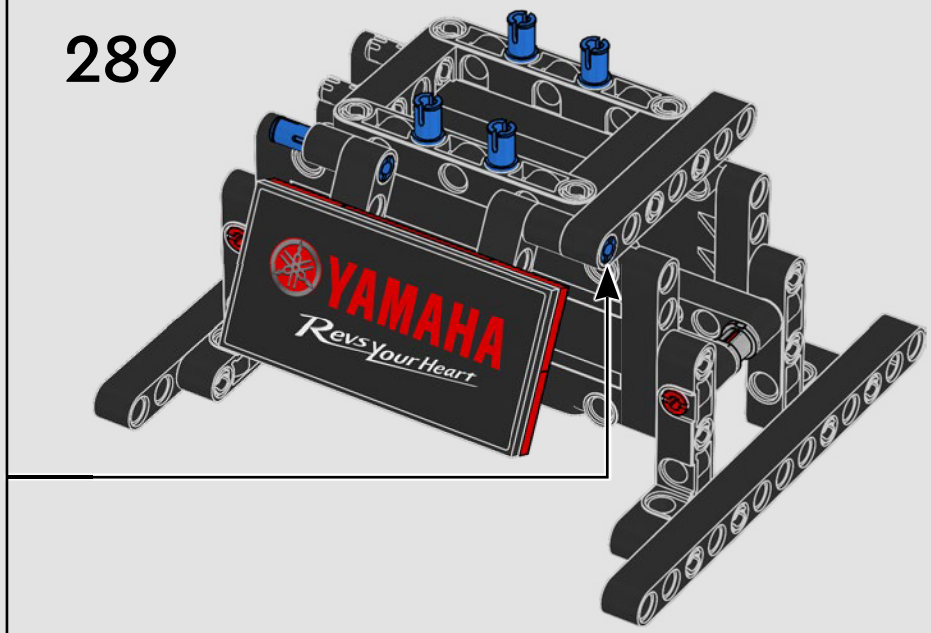

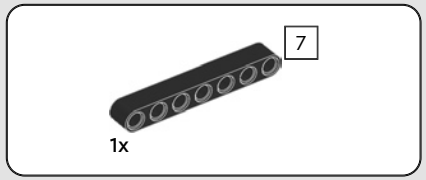
7
1x

290

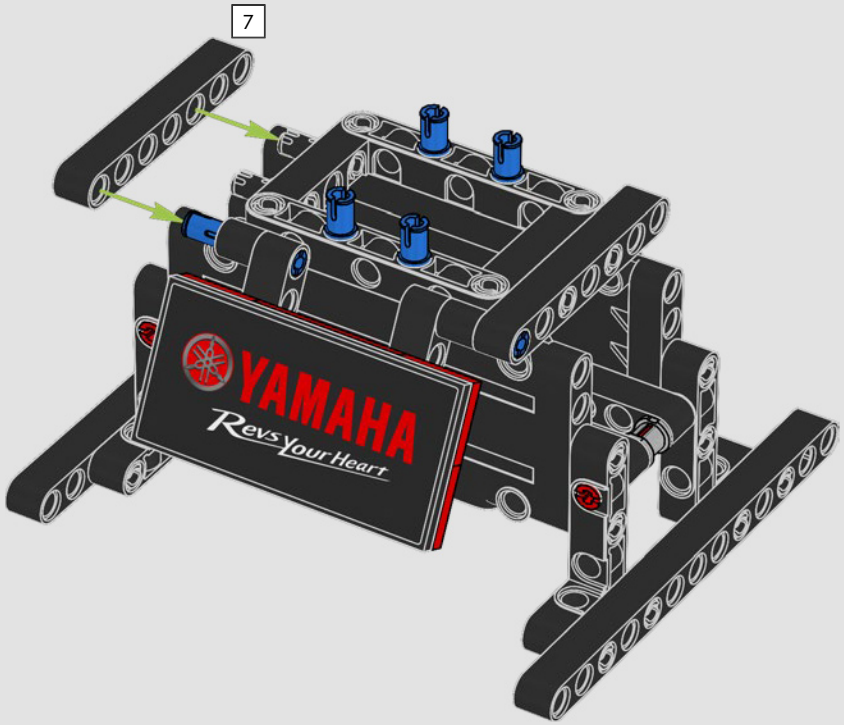
7
YAMAHA
Revs Your Heart

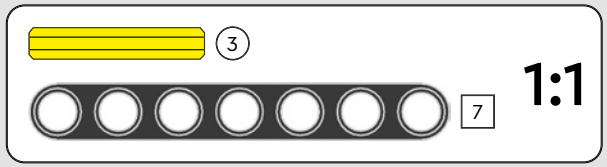
3
7
1:1

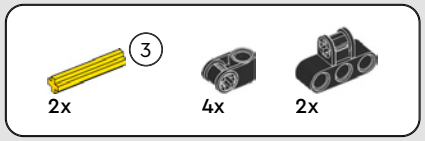
3
2x
4x
2x

291

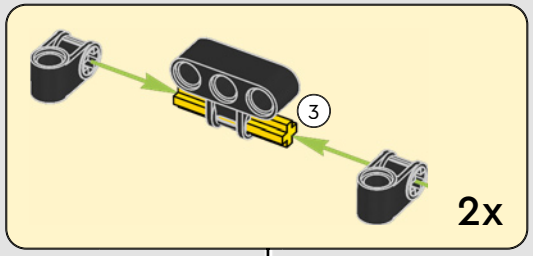
3
2x

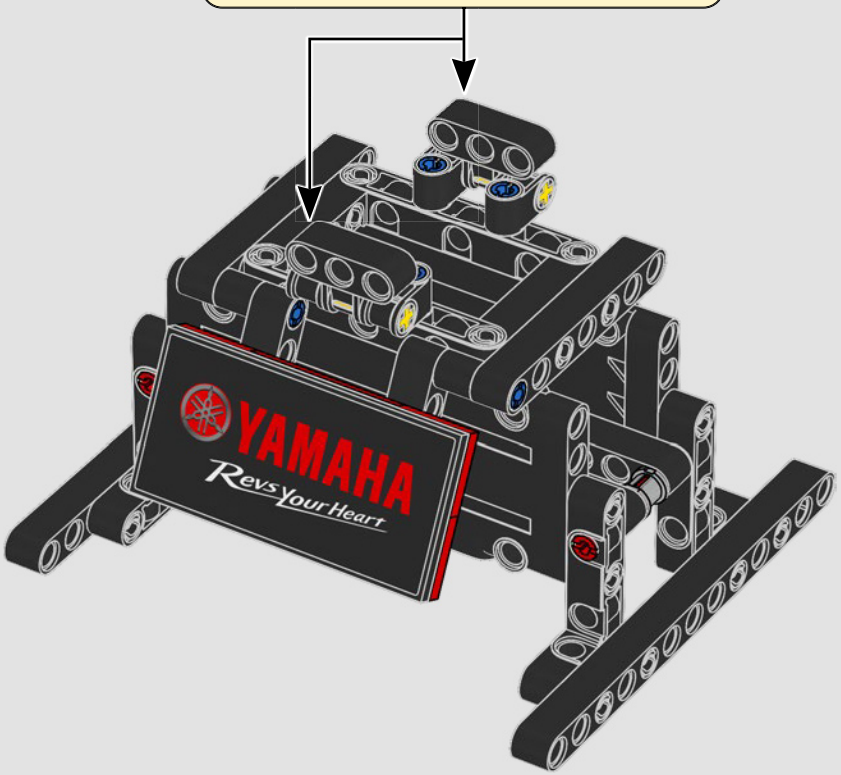
YAMAHA
Revs Your Heart

292

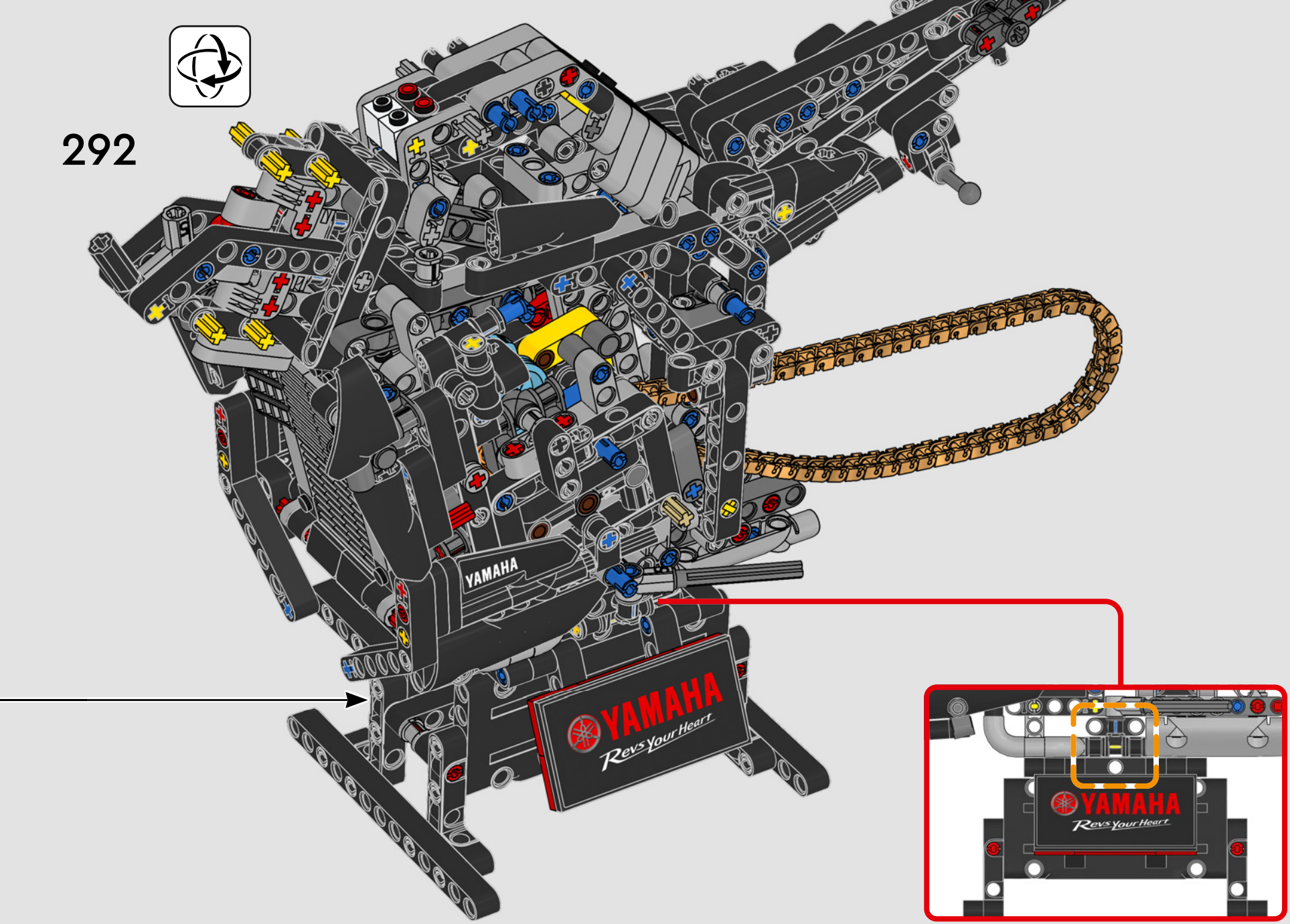

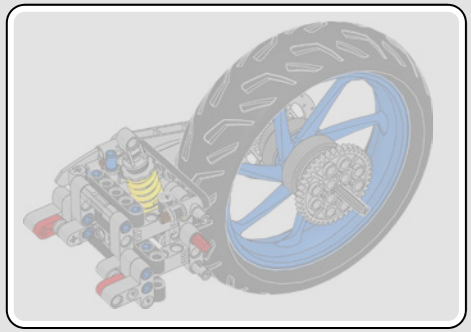

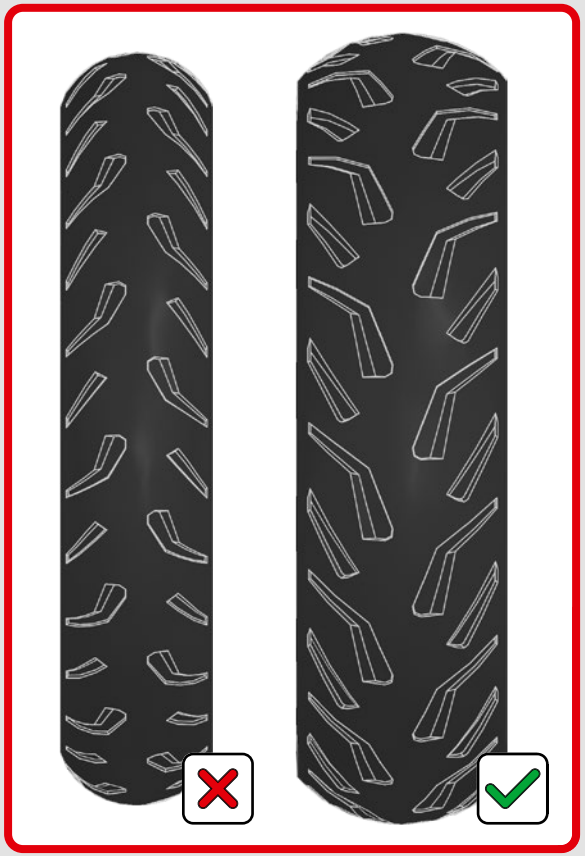

293

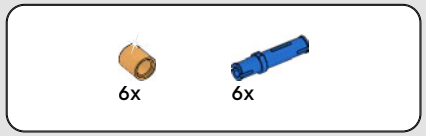

294

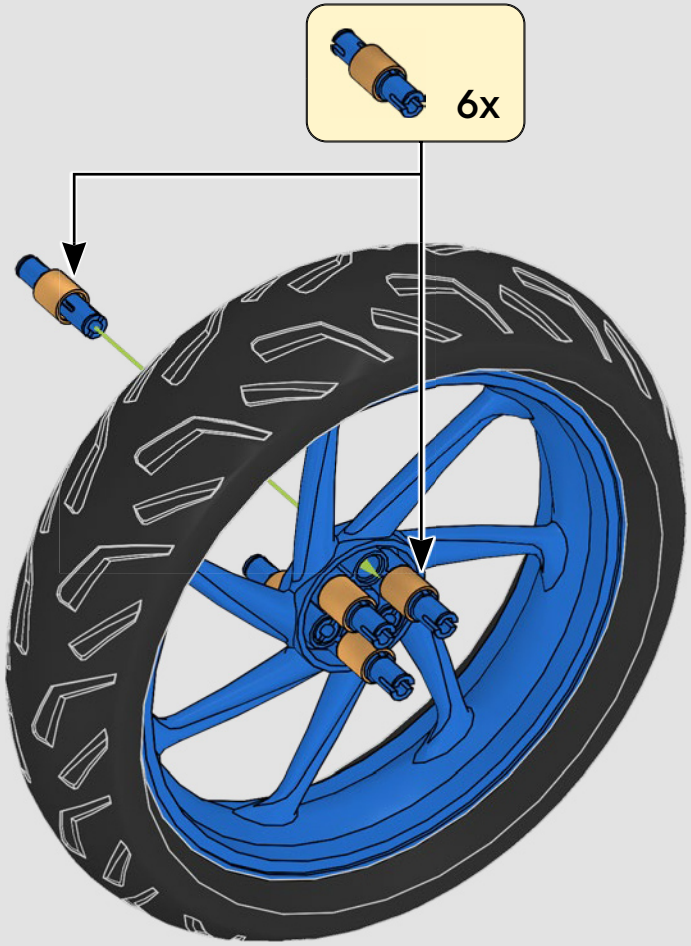

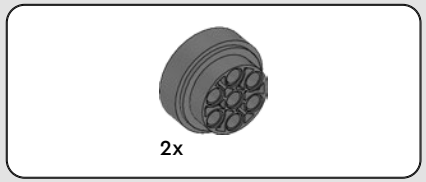

295

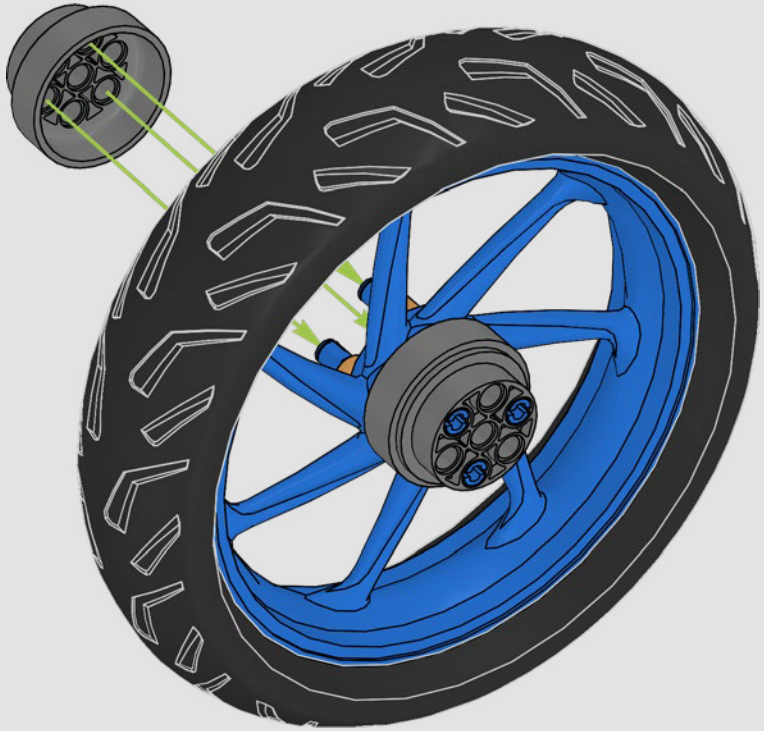

296

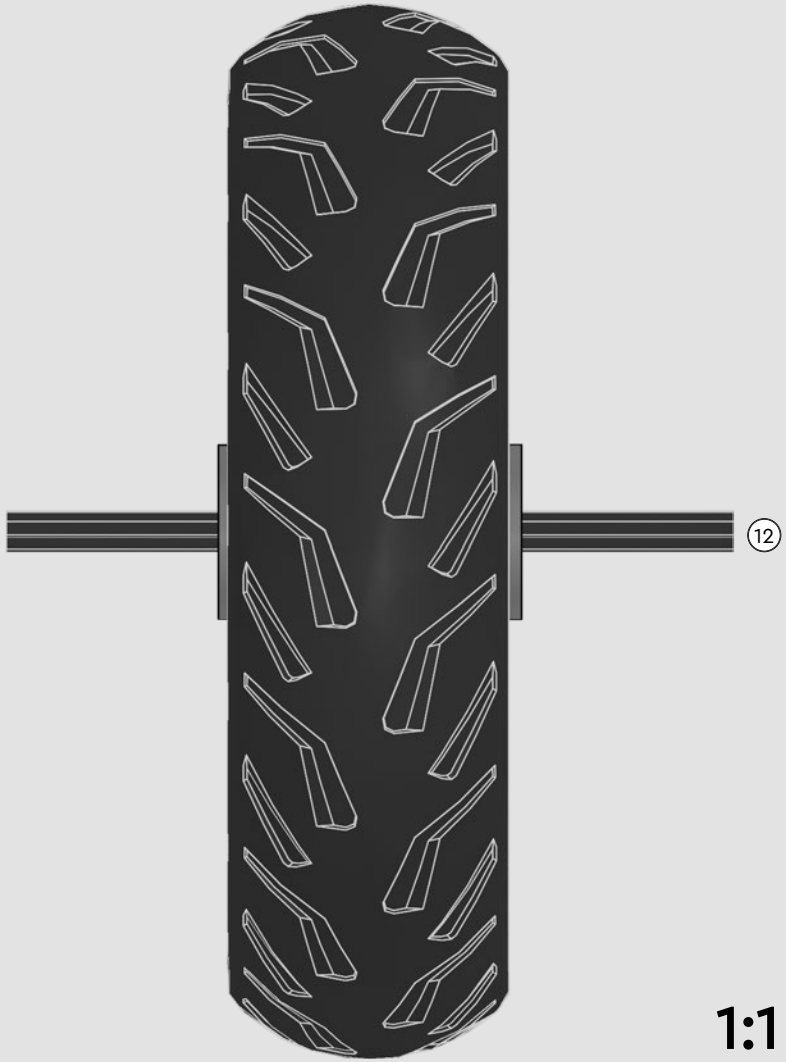

1:1

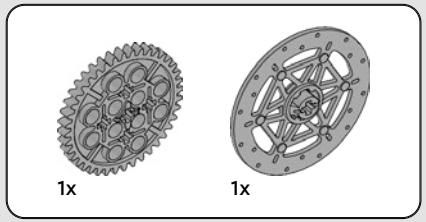

297

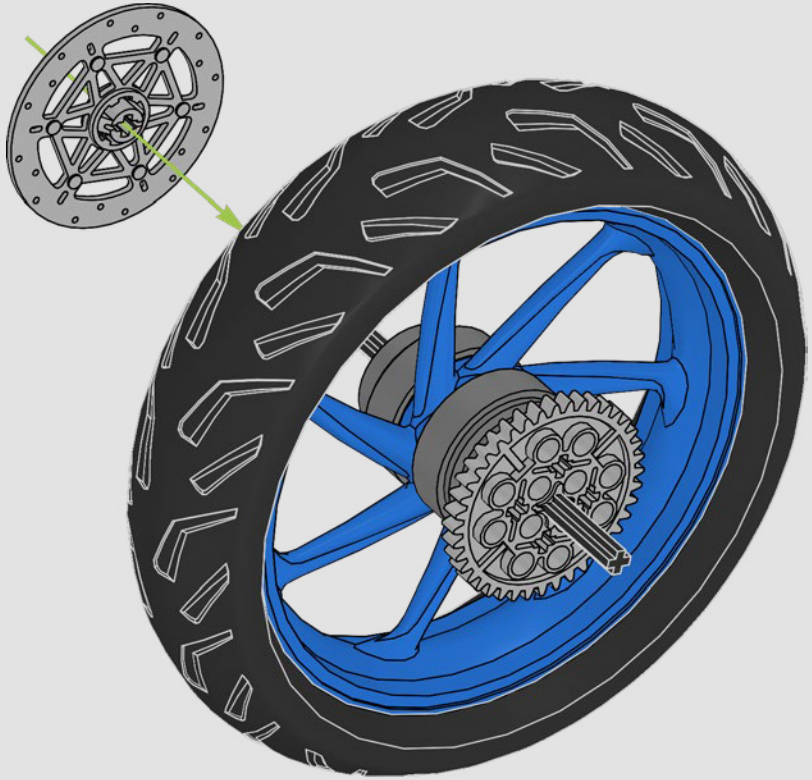

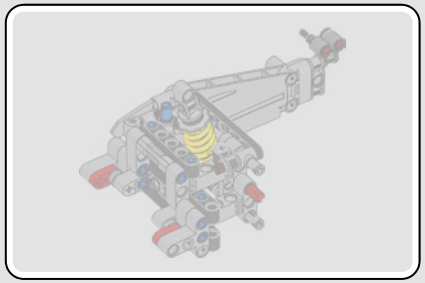

298

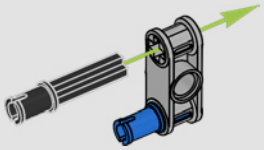

299

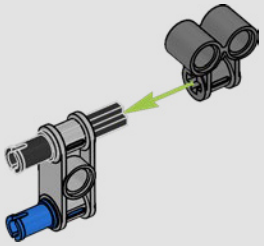

300

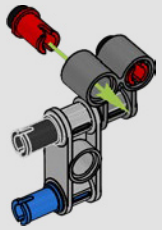

301

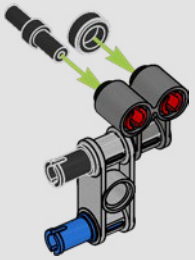

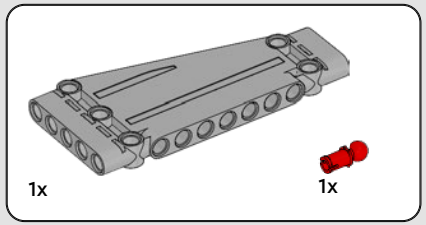

302

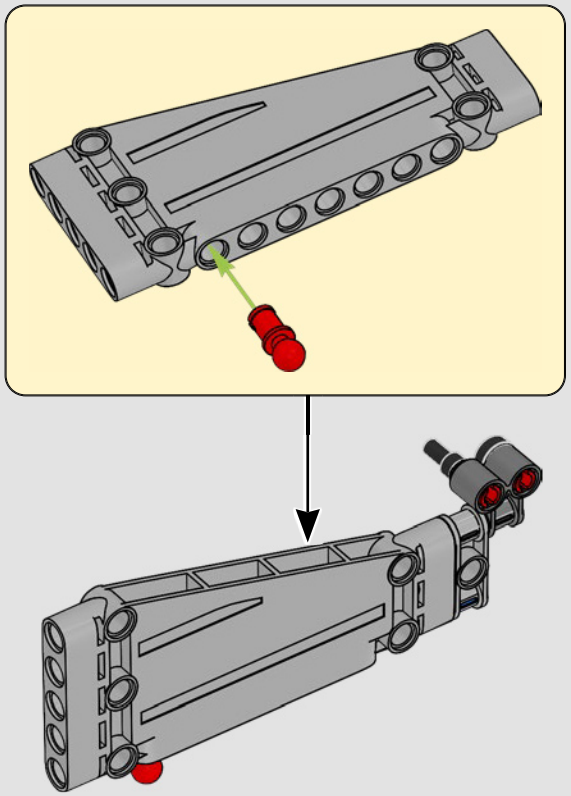

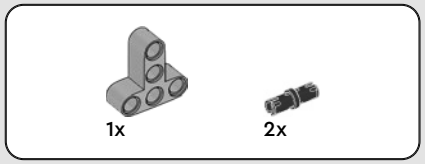

303

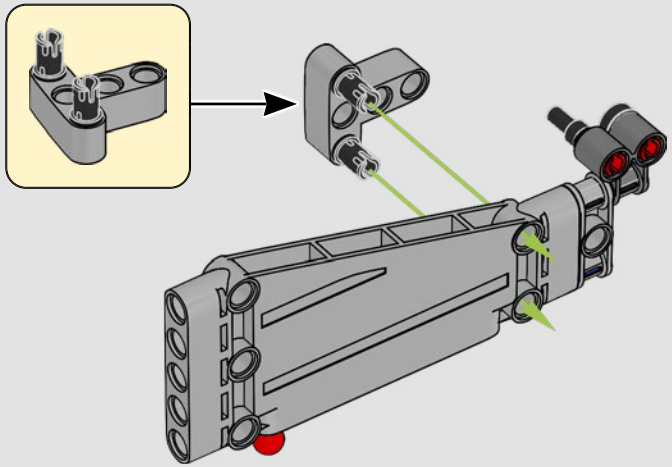

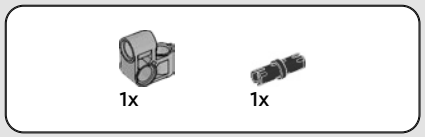

304

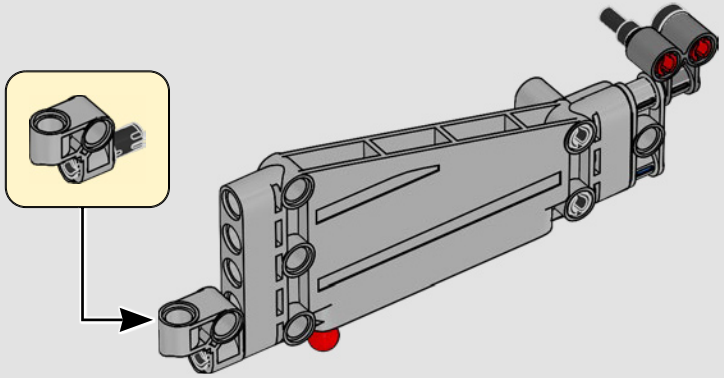

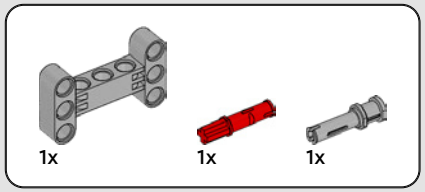

305

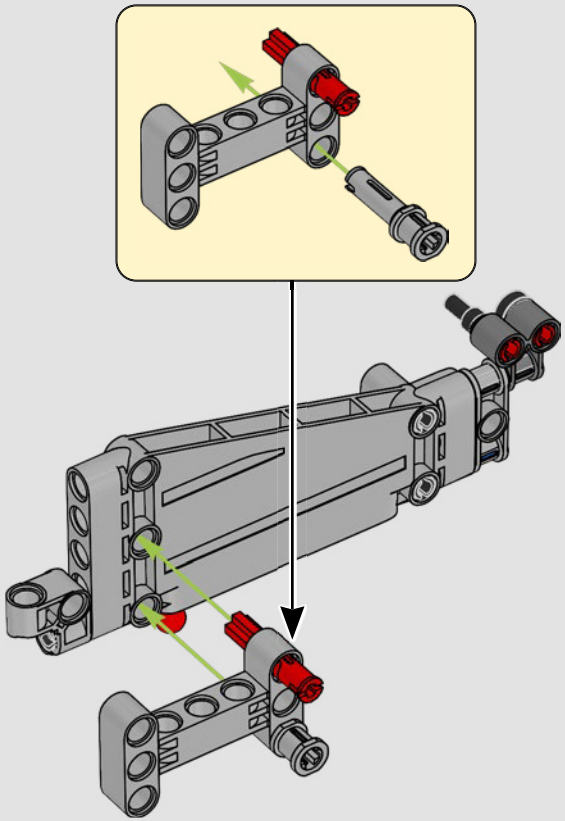

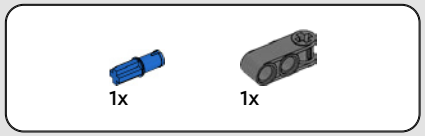

306

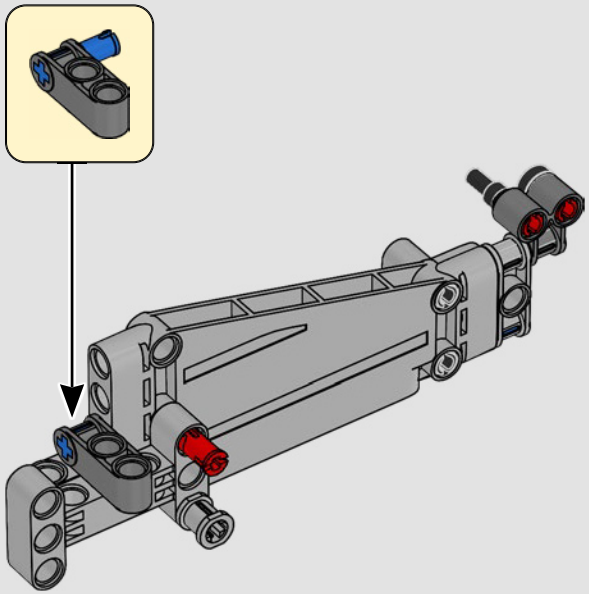

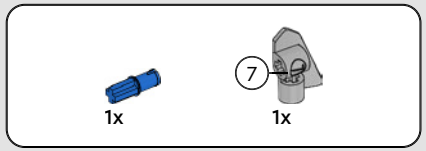

307

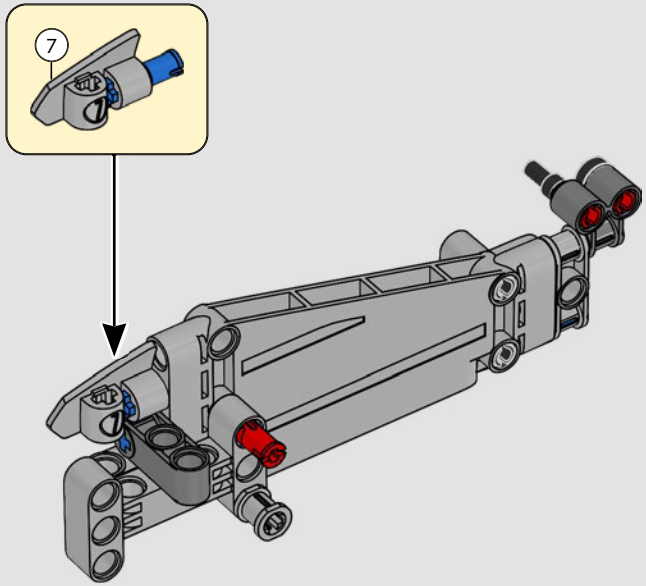

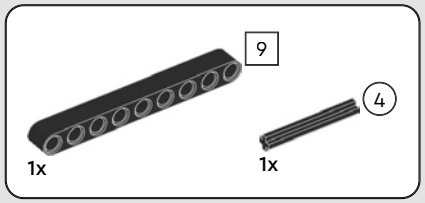

308

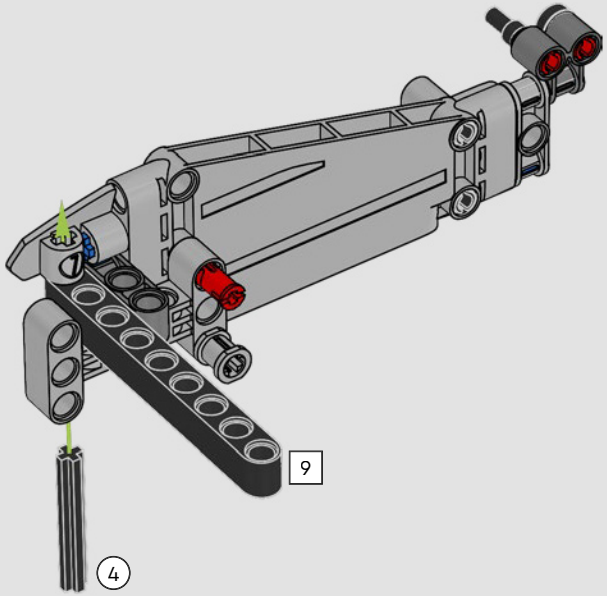

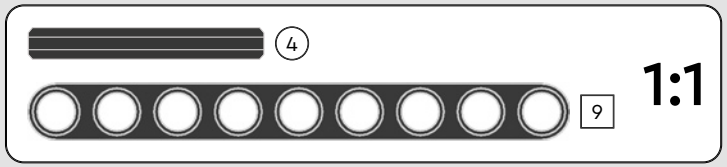

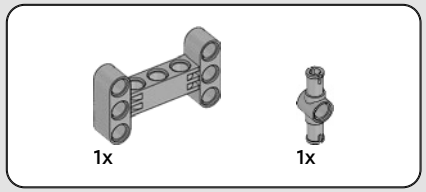

309

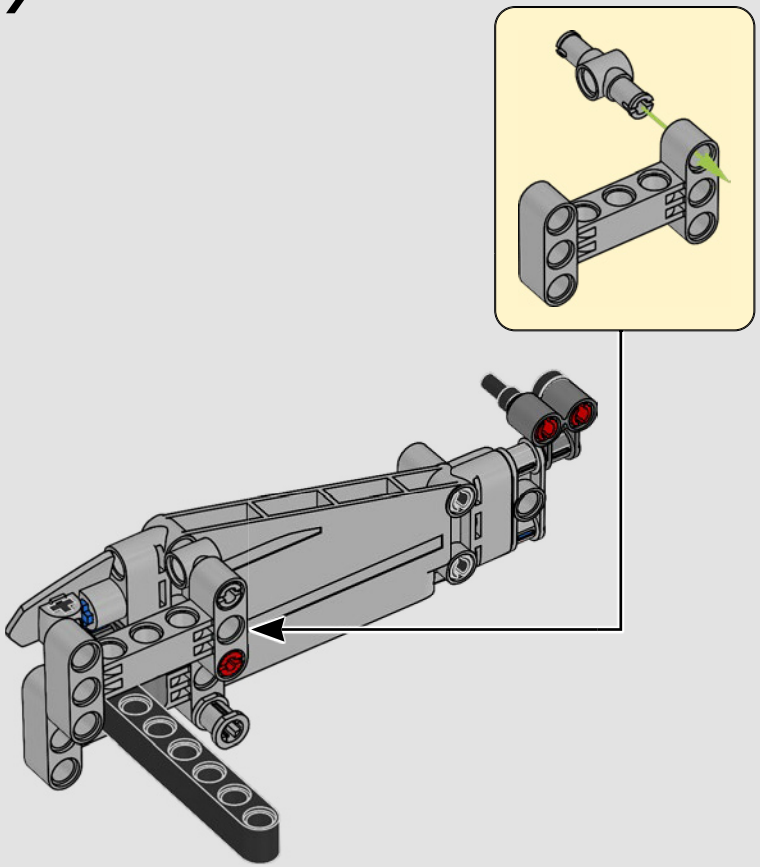

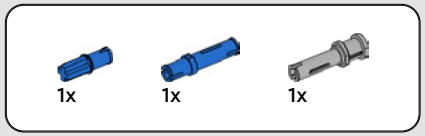

310

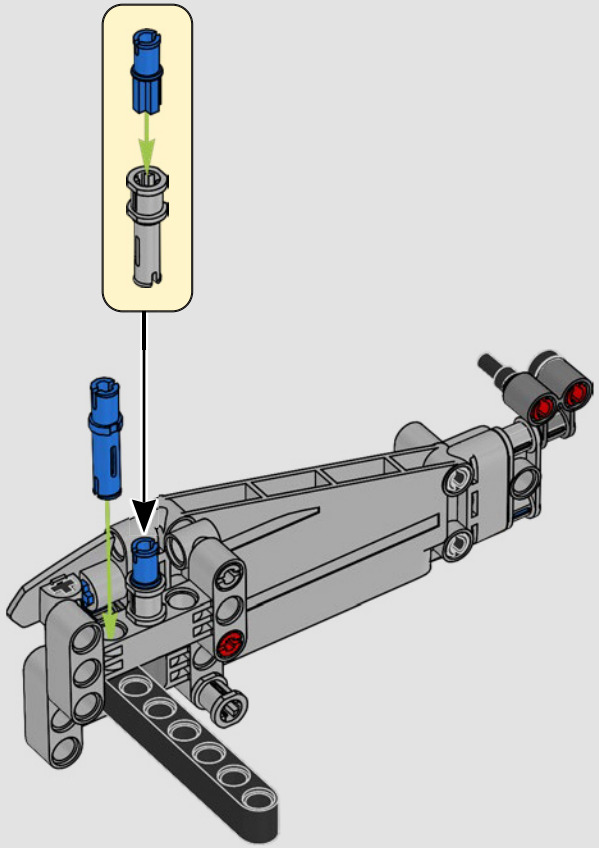

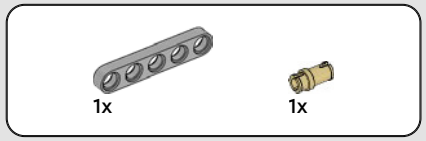

311

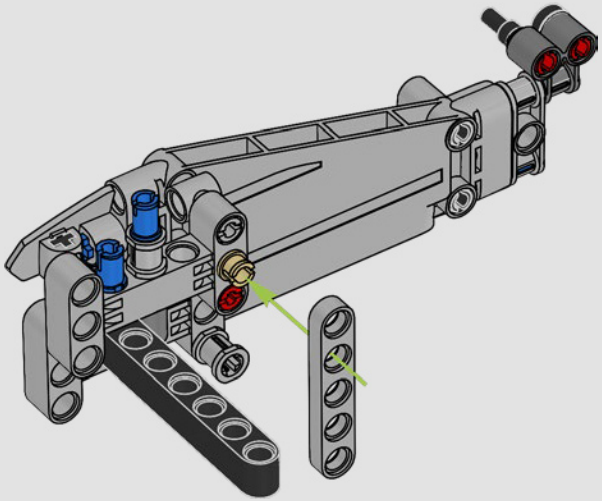

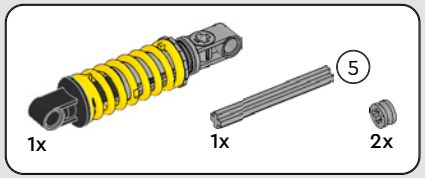

312

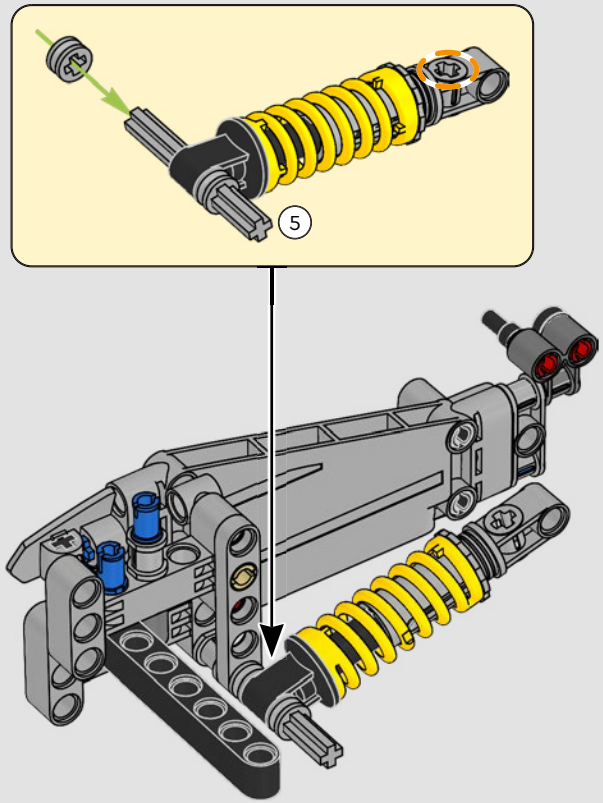

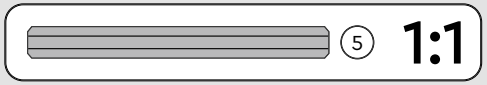

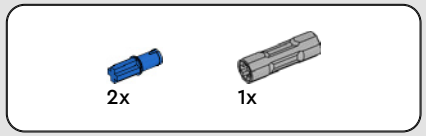

313

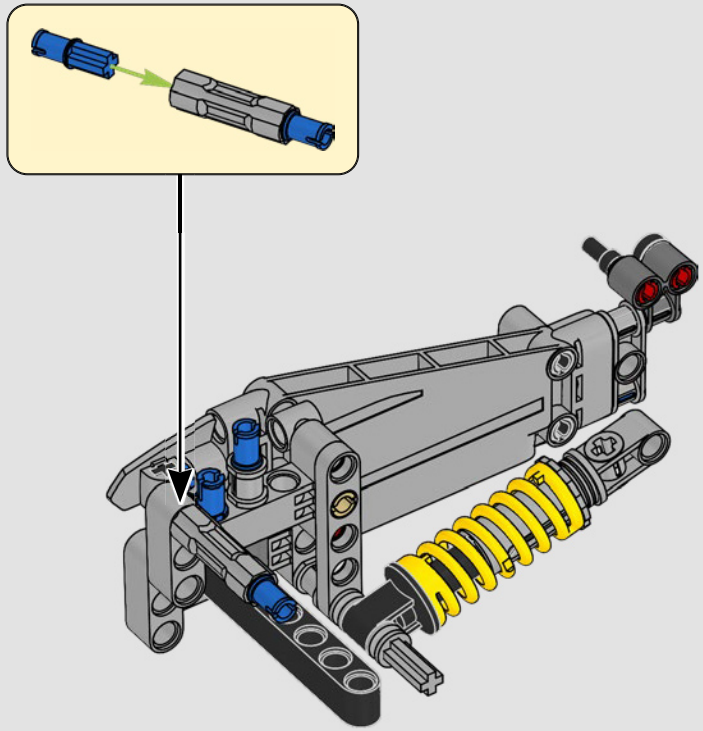

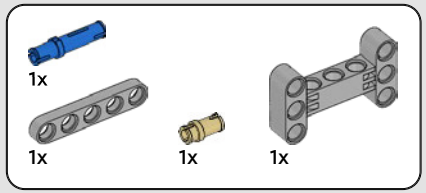

314

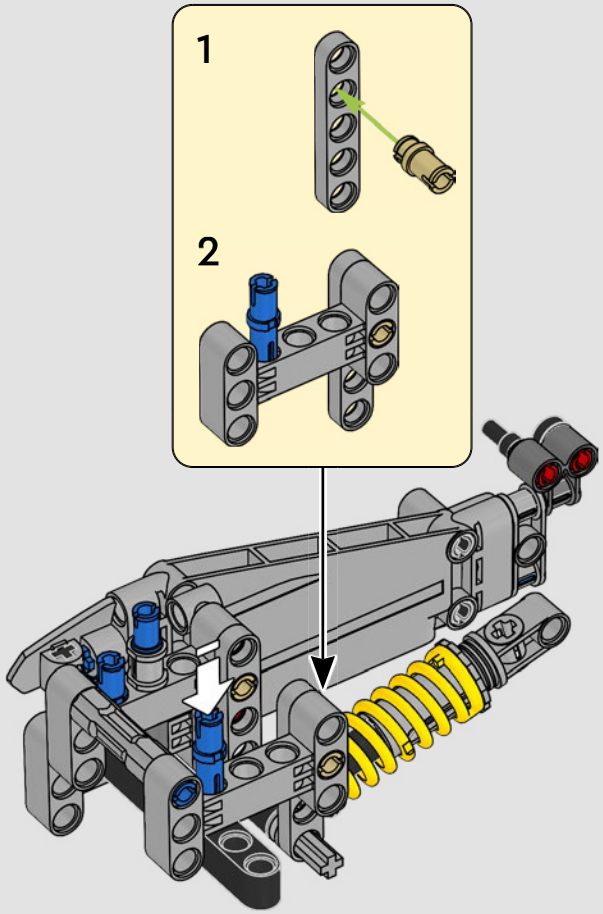

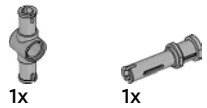

315

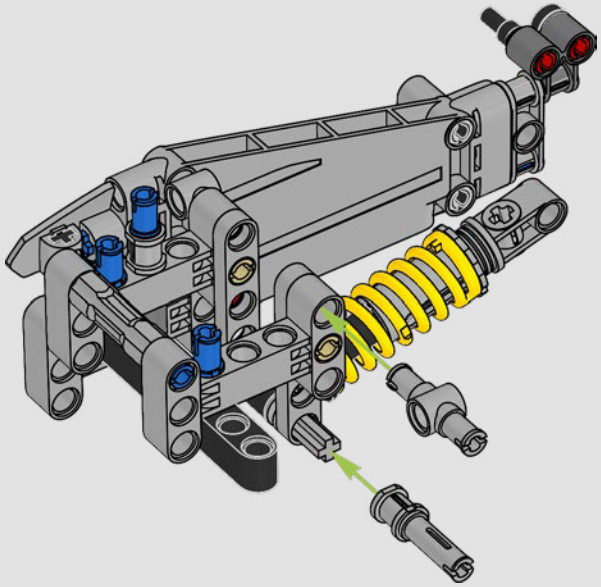

316

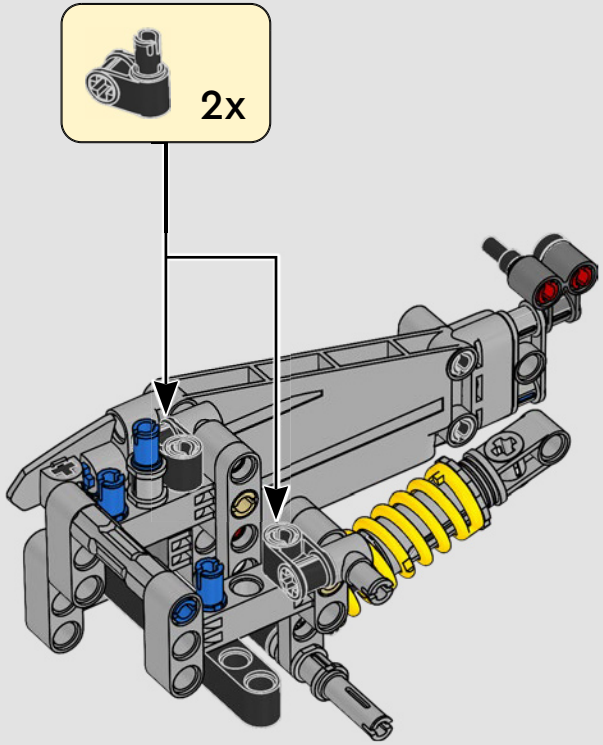

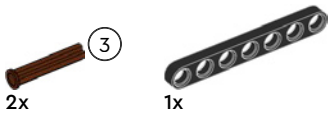

317

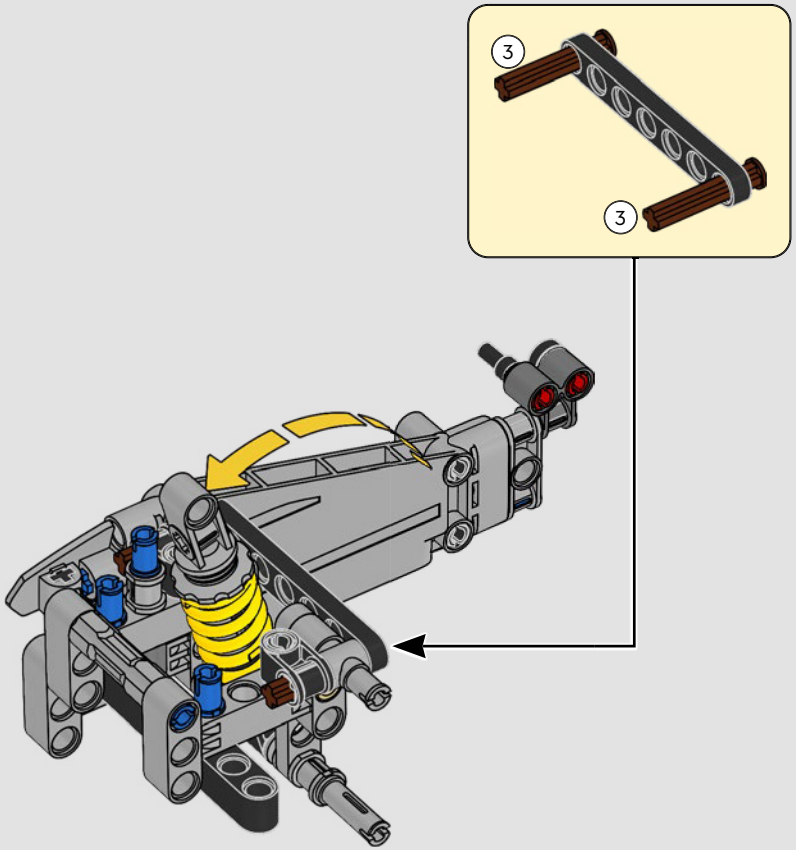

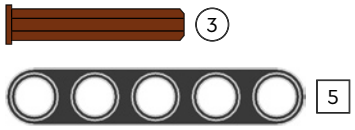

1:1

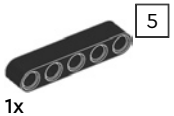

318

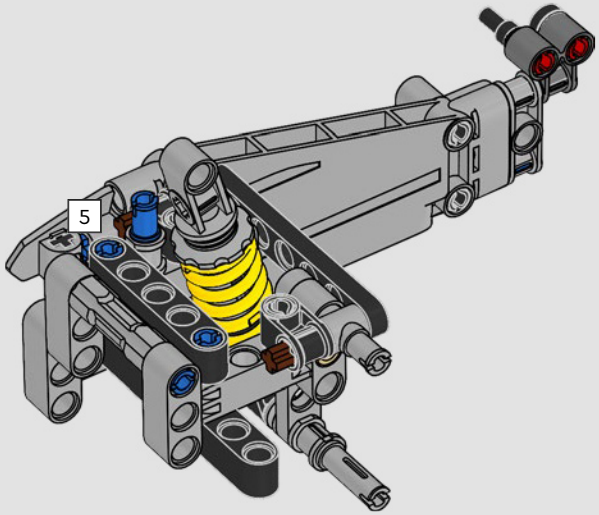

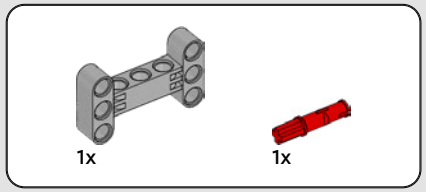

319

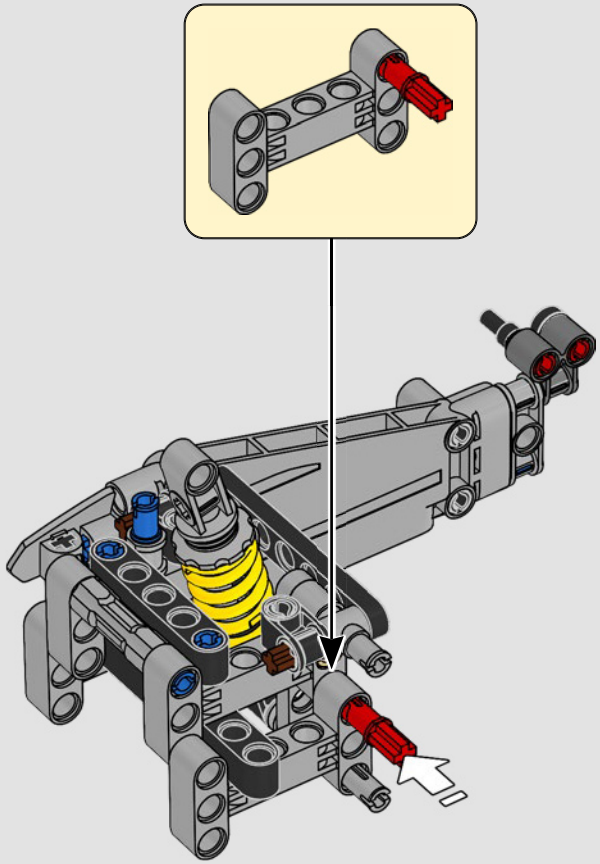

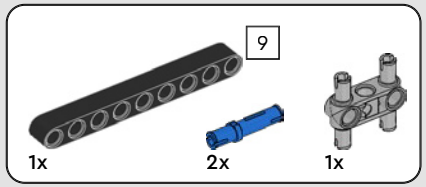

320

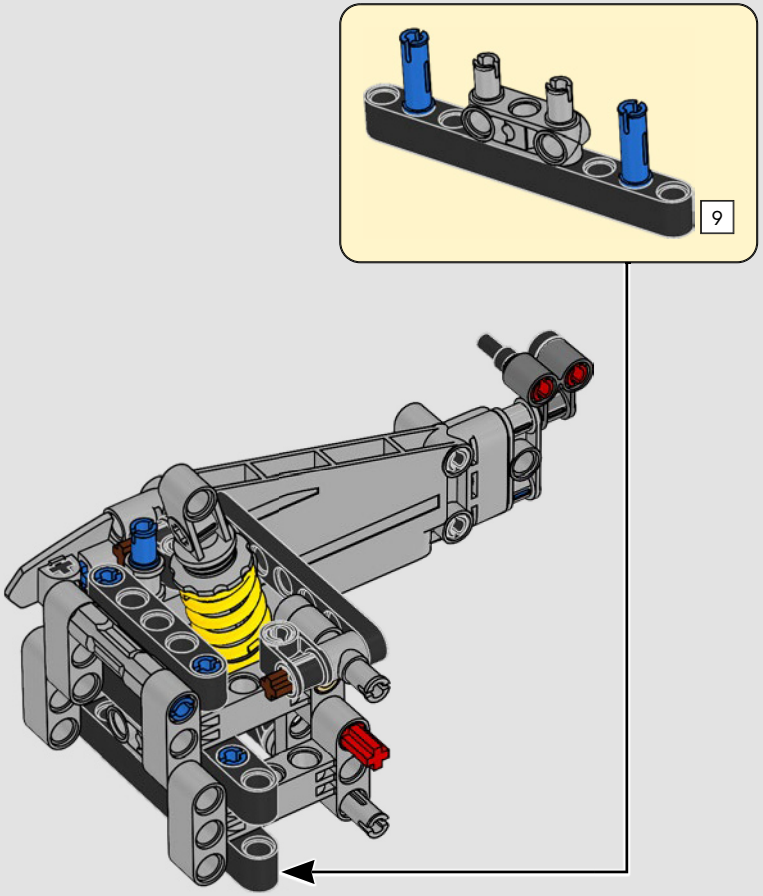

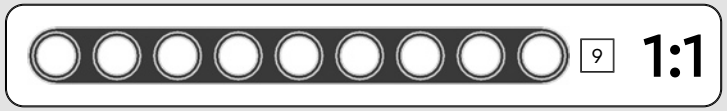

321

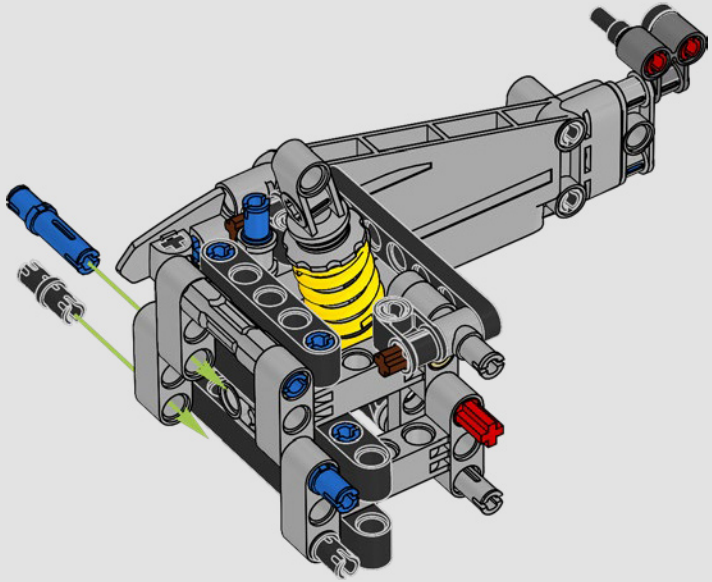

322

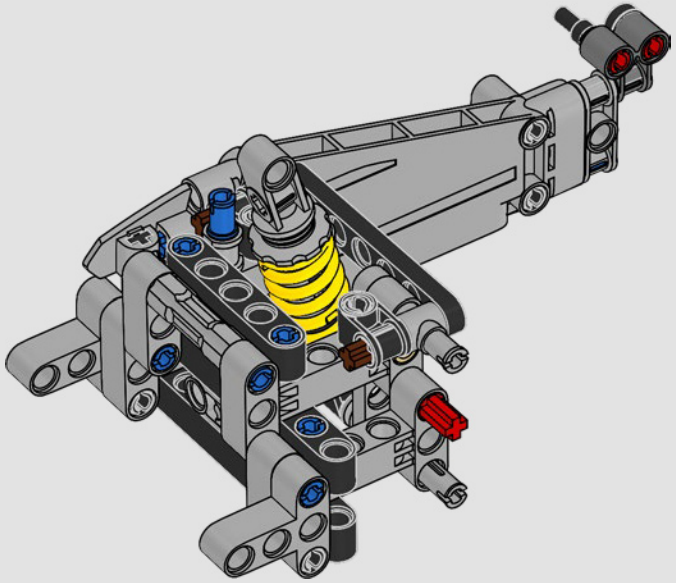

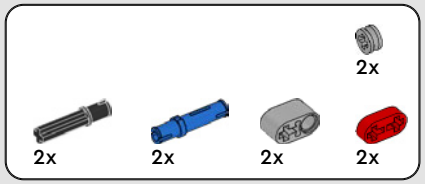

323

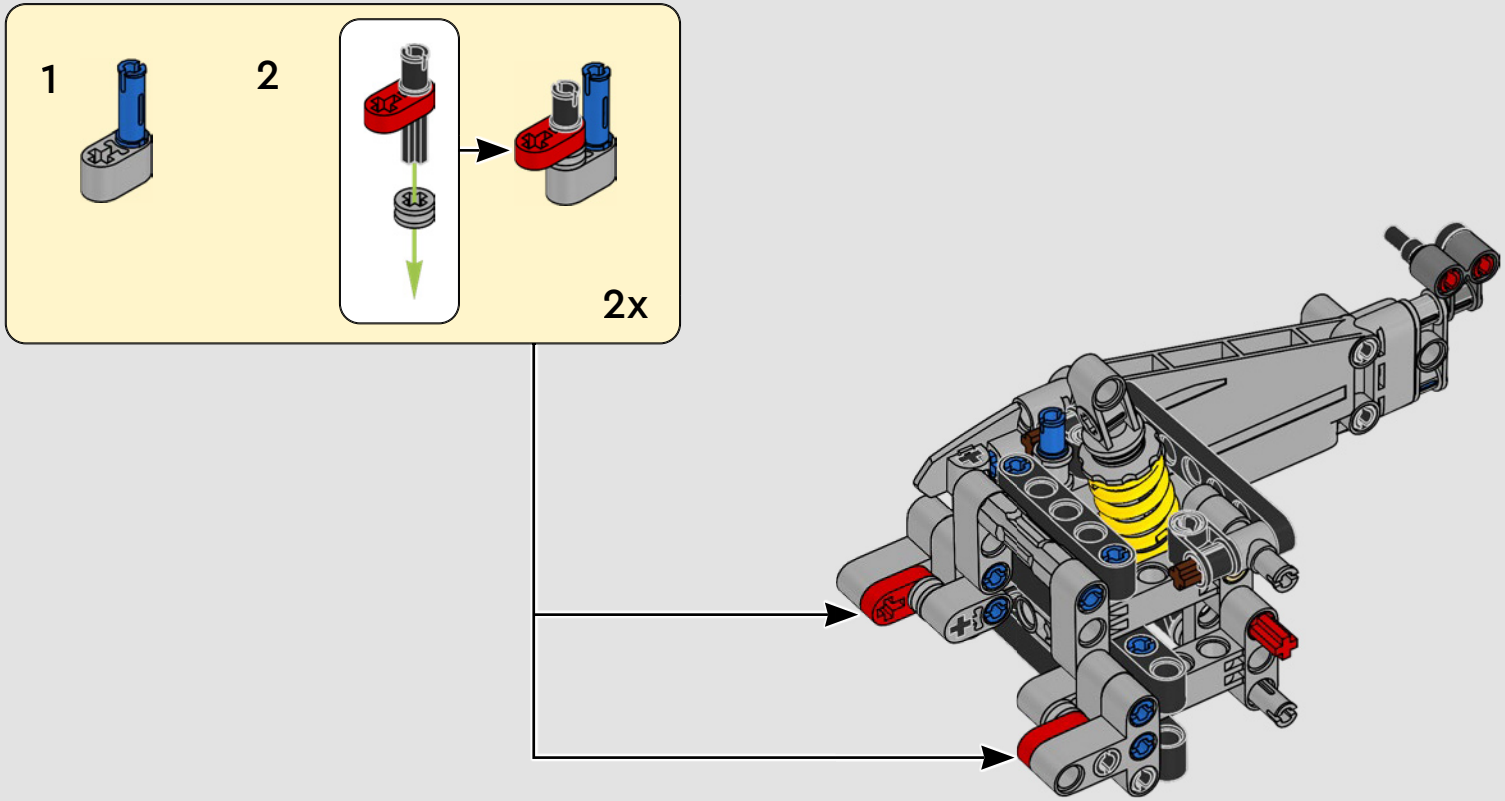

1x

324

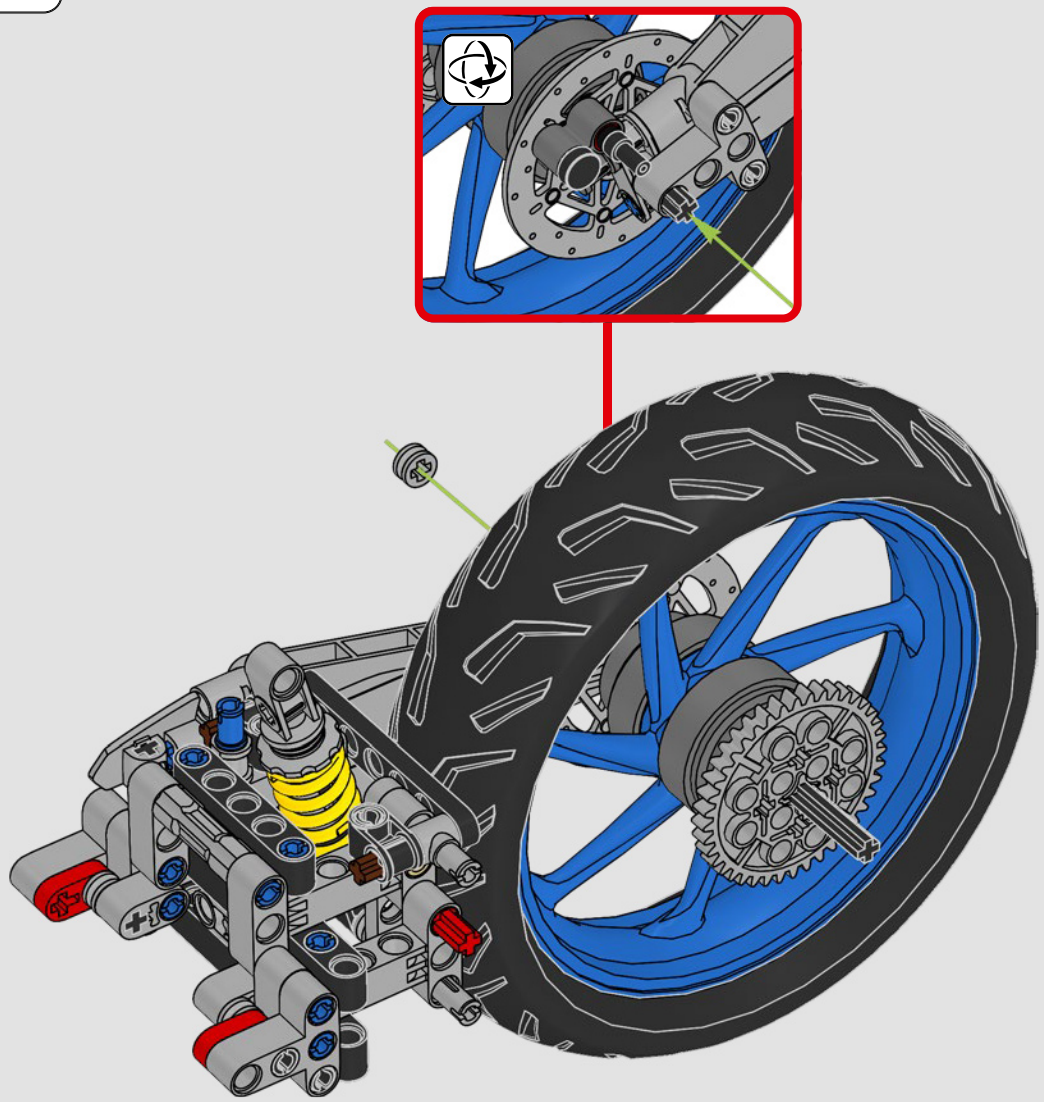

325

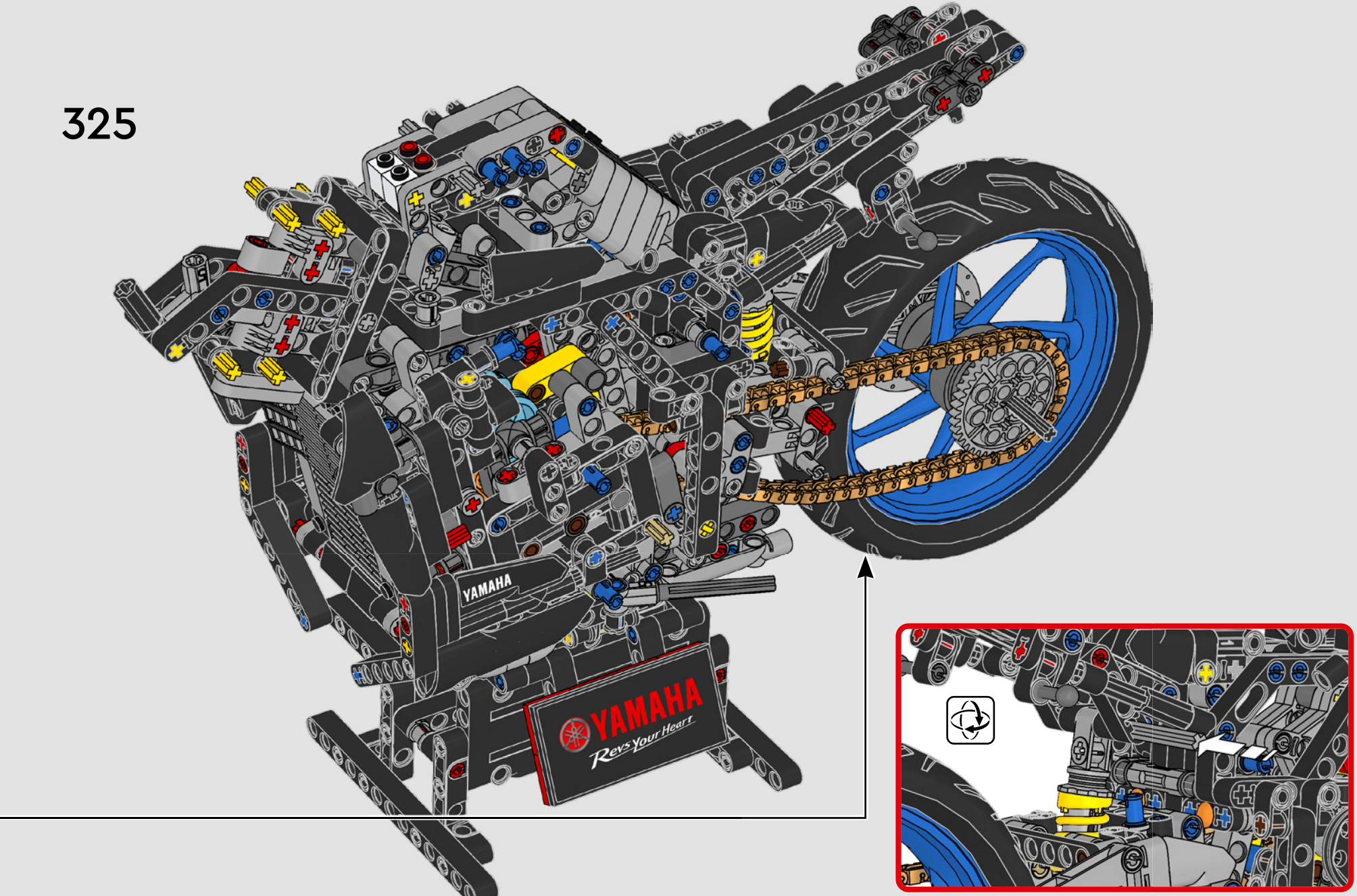

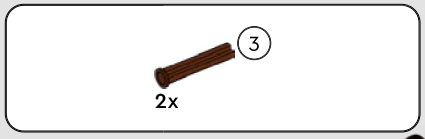

326

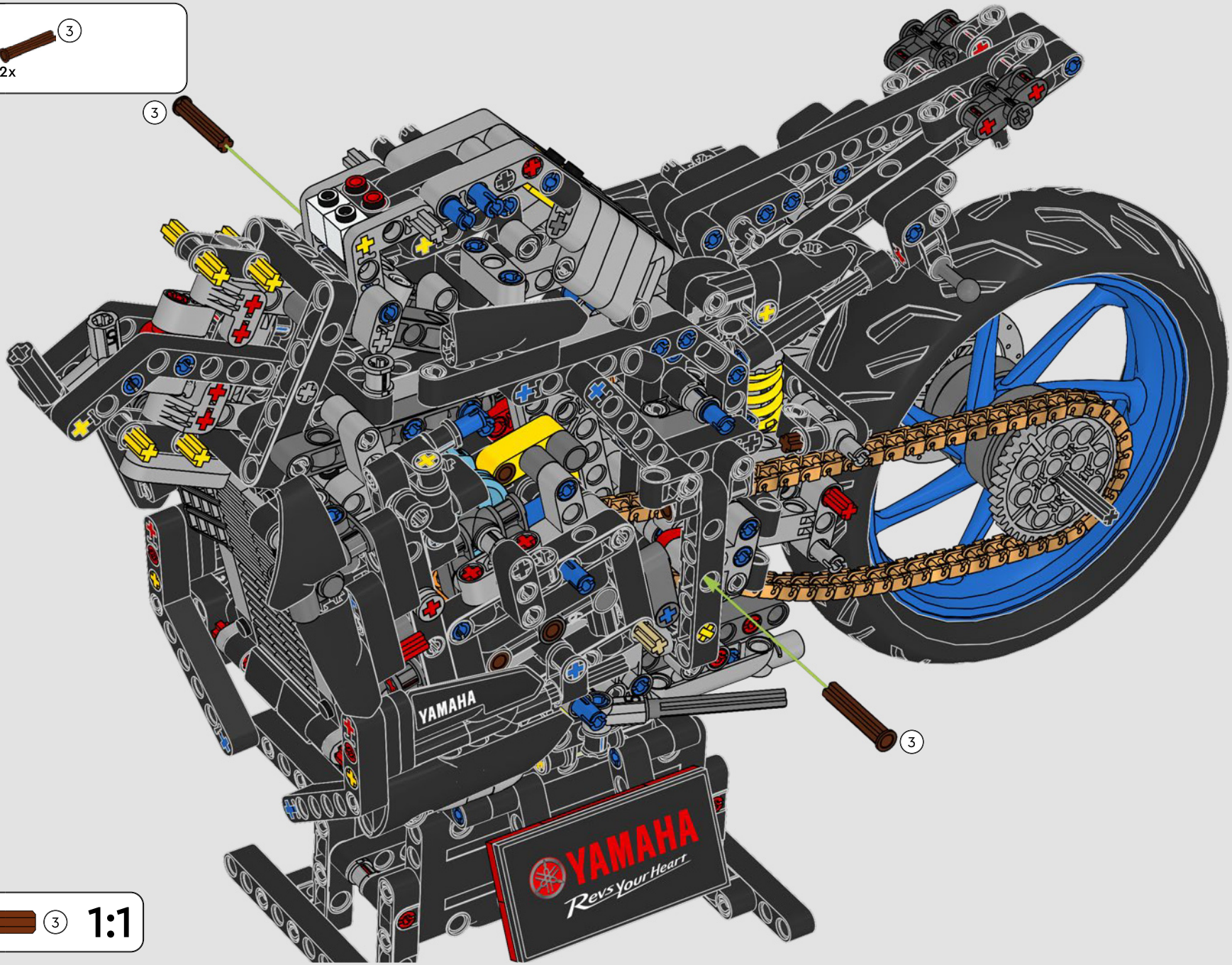

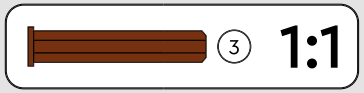

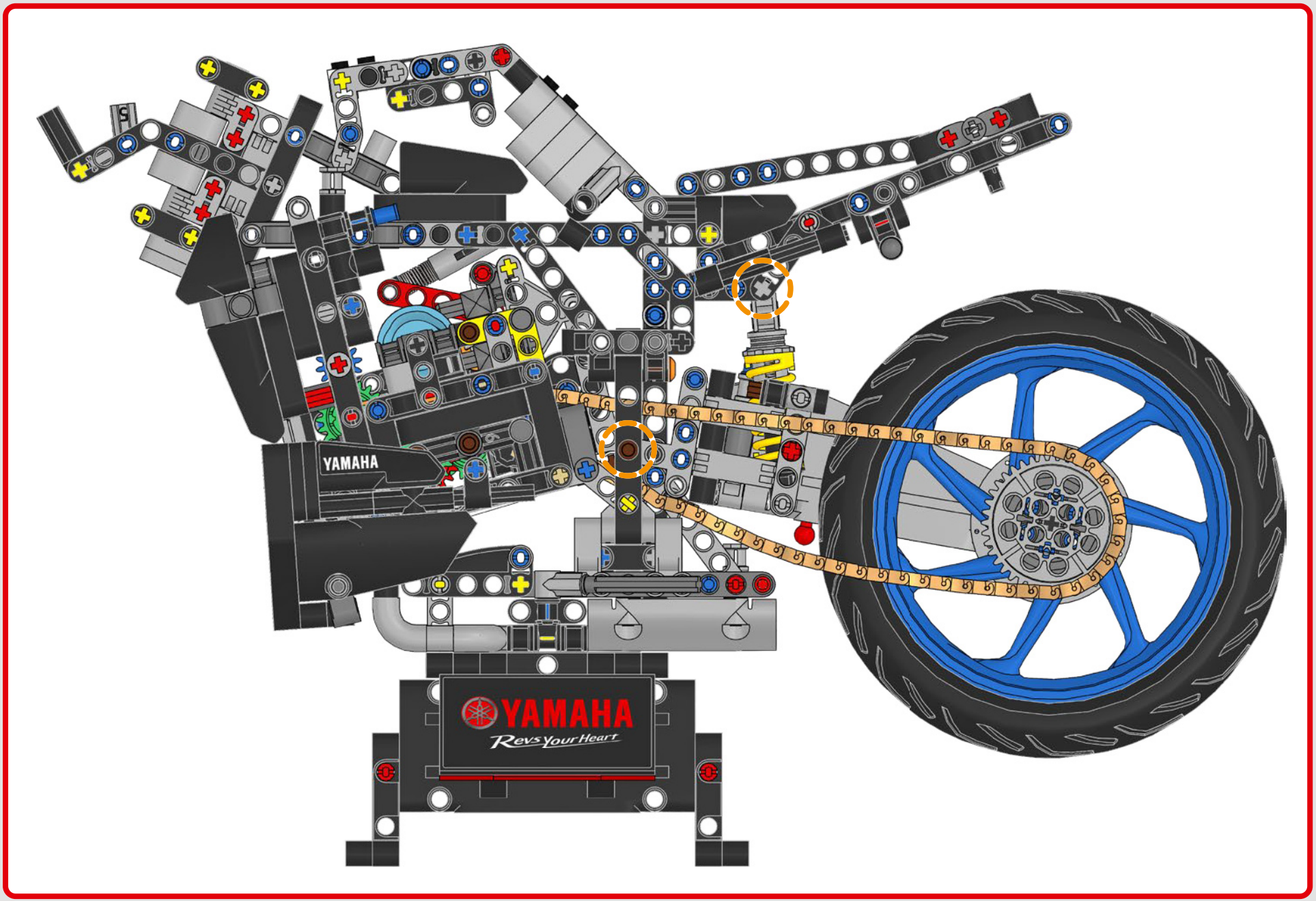
YAMAHA
YAMAHA
Revs Your Heart

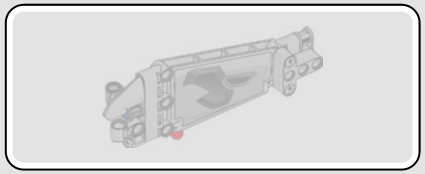

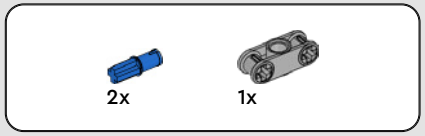

327

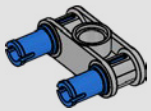

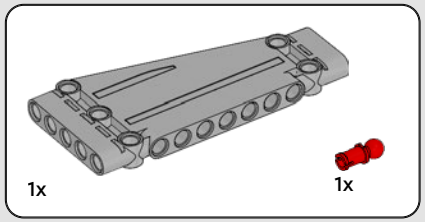

328

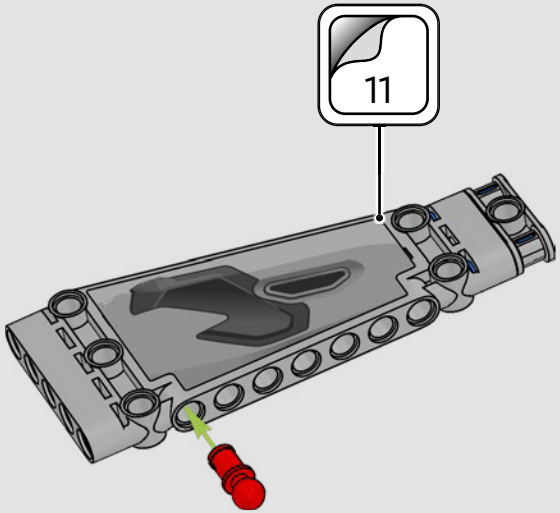

329

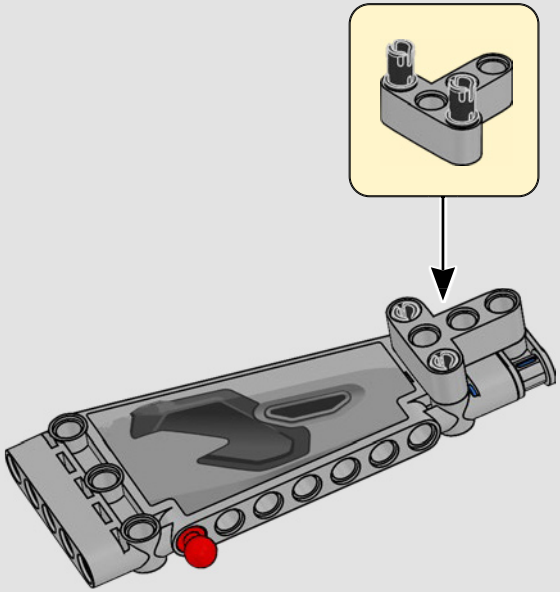

330

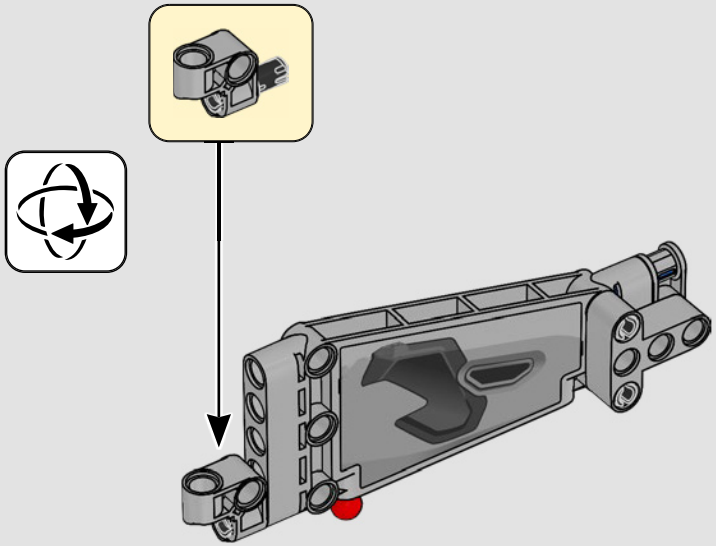

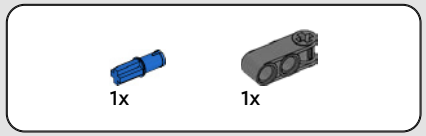

331

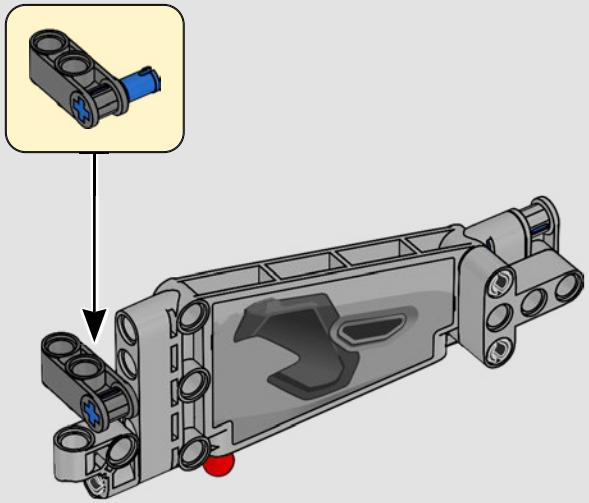

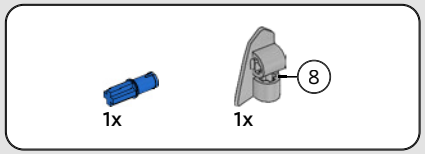

332

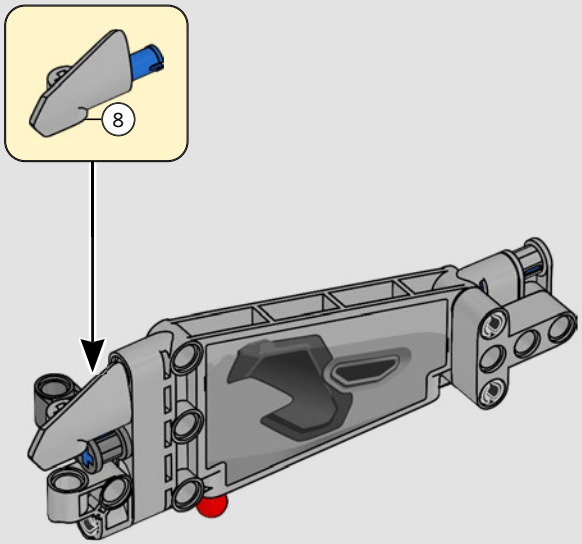

333

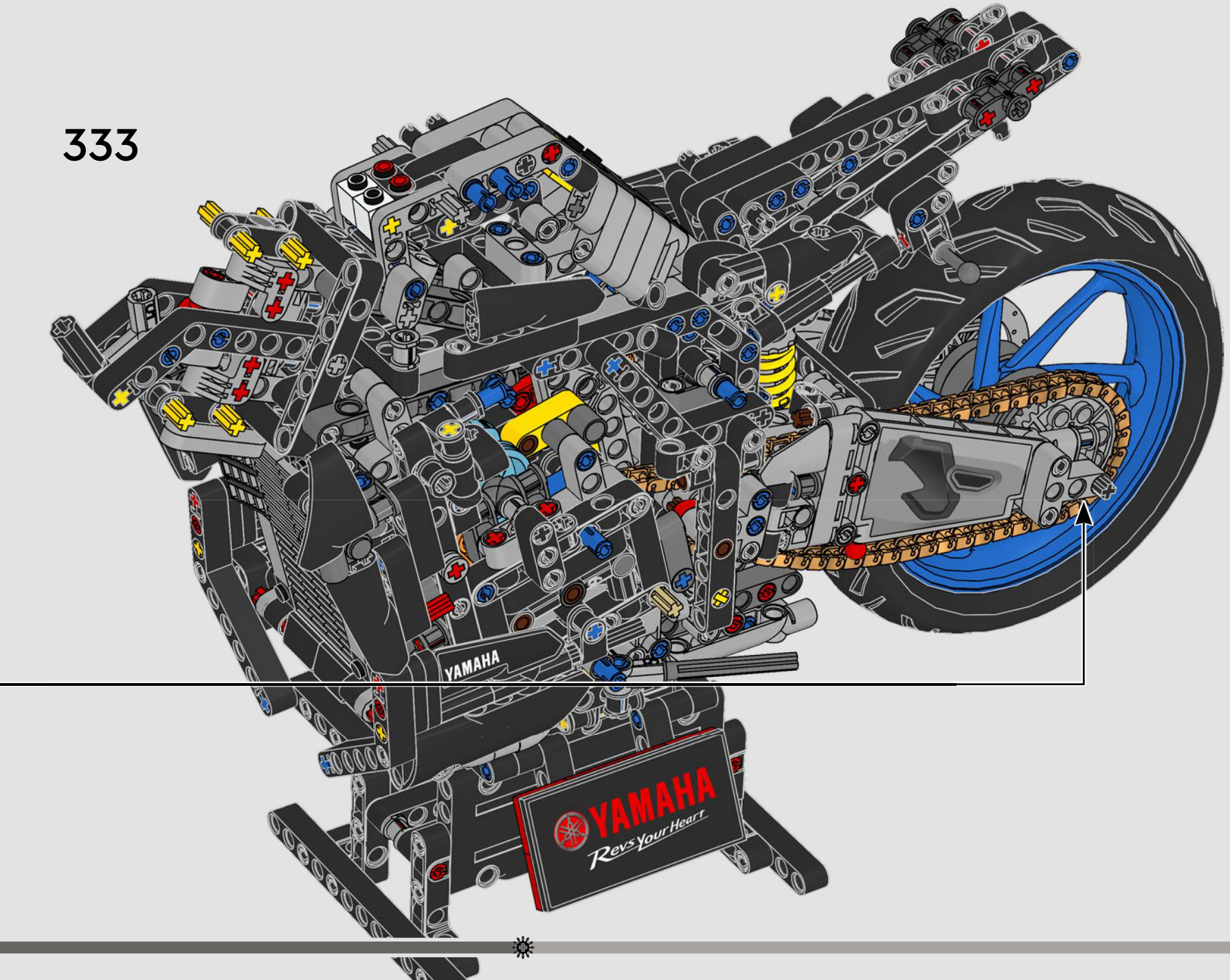

334

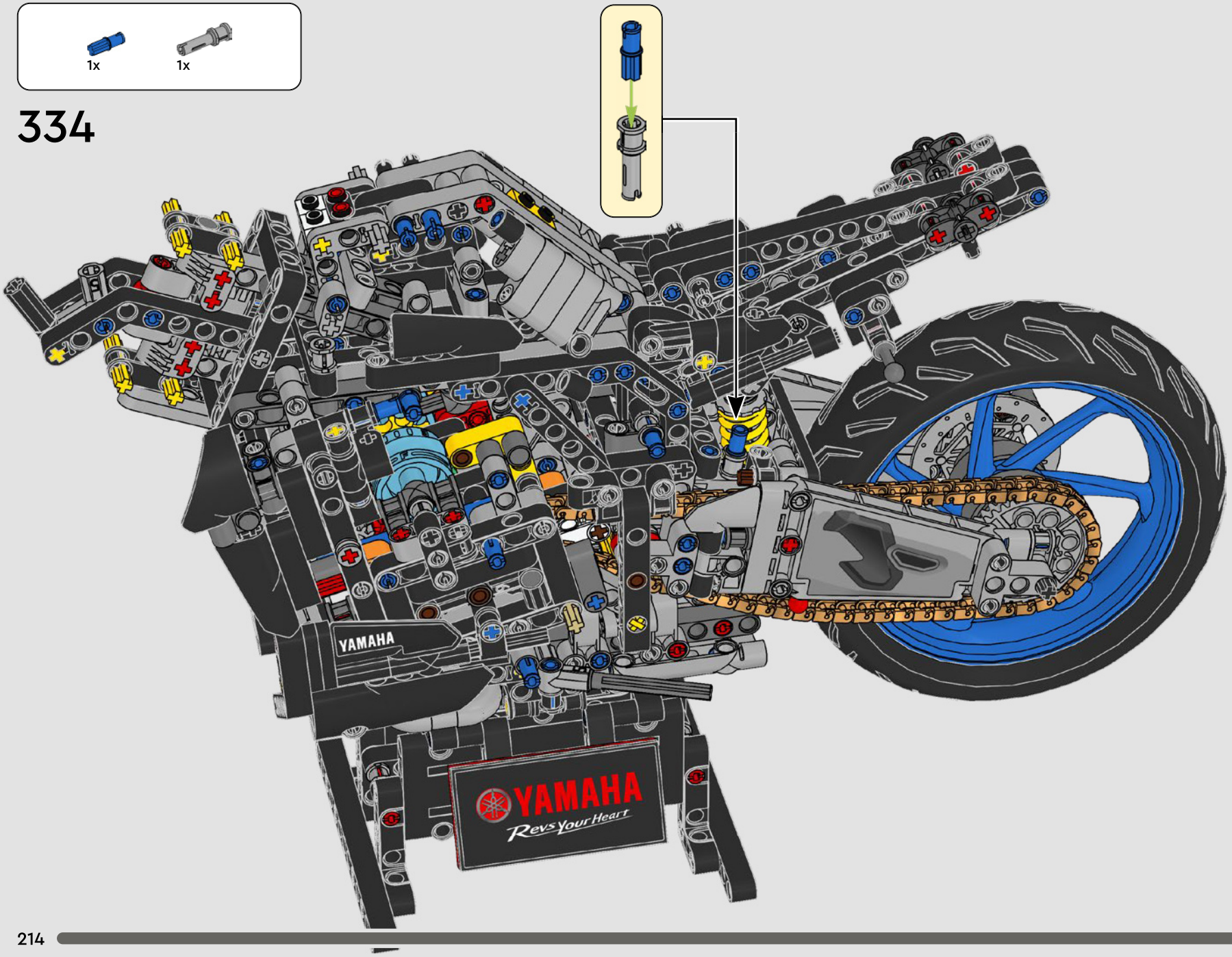

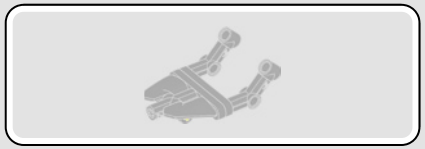

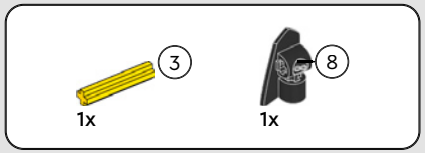

335

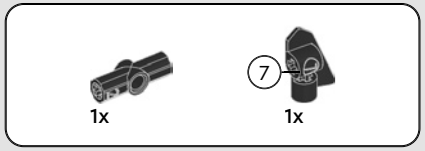

336

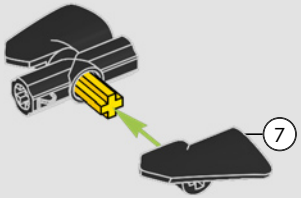

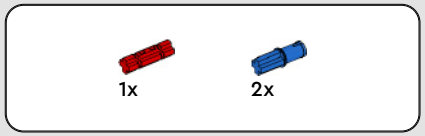

337

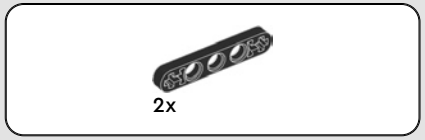

338

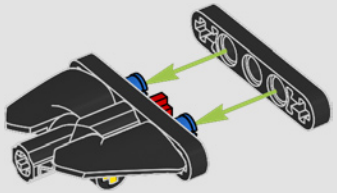

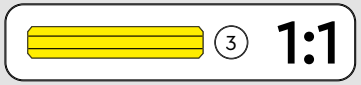

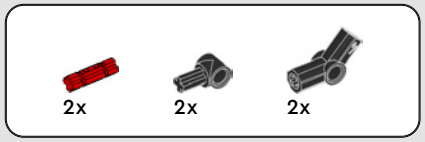

339

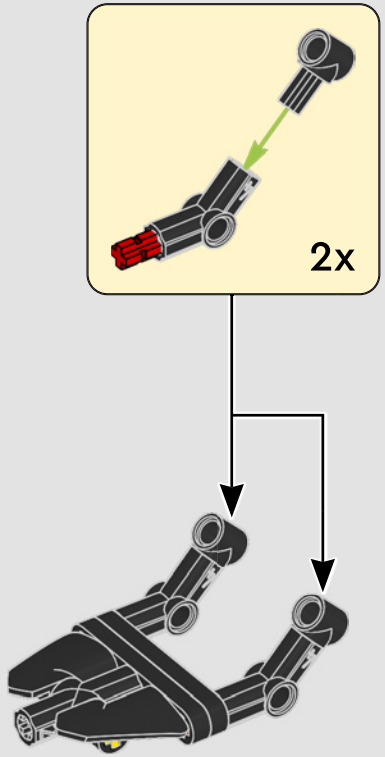

340

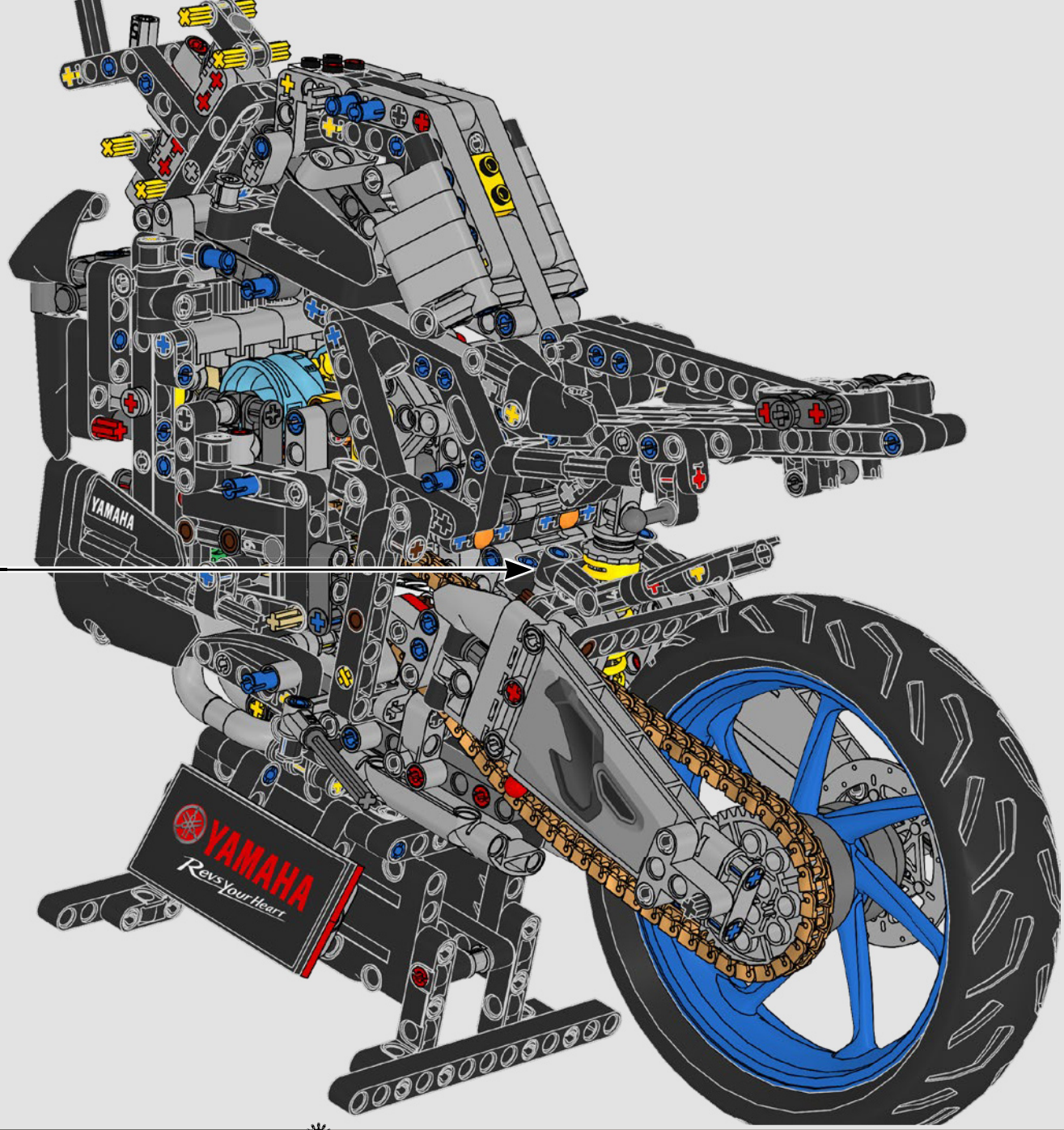

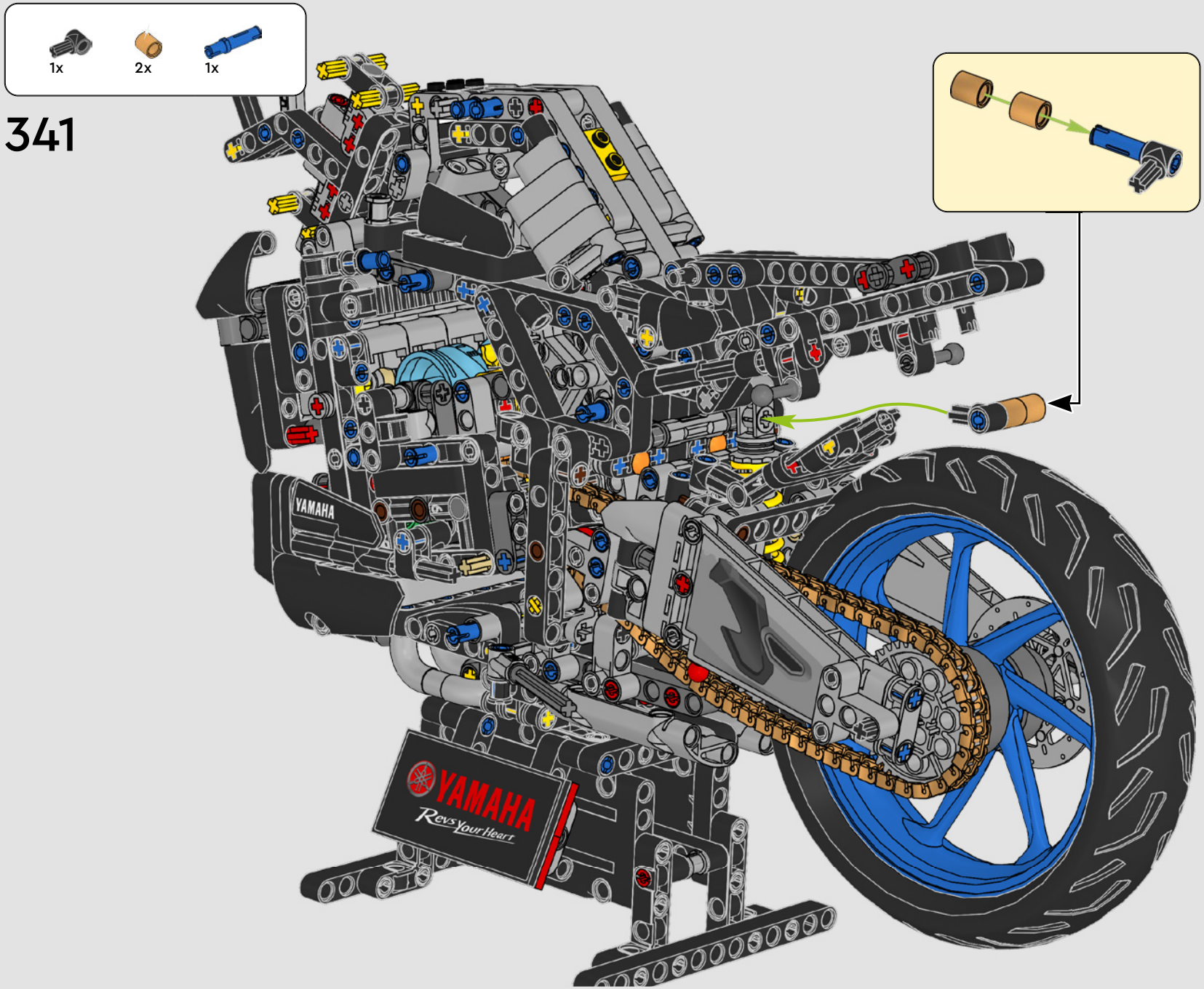
1x
2x
1x
341
YAMAHA
YAMAHA
Revs Your Heart

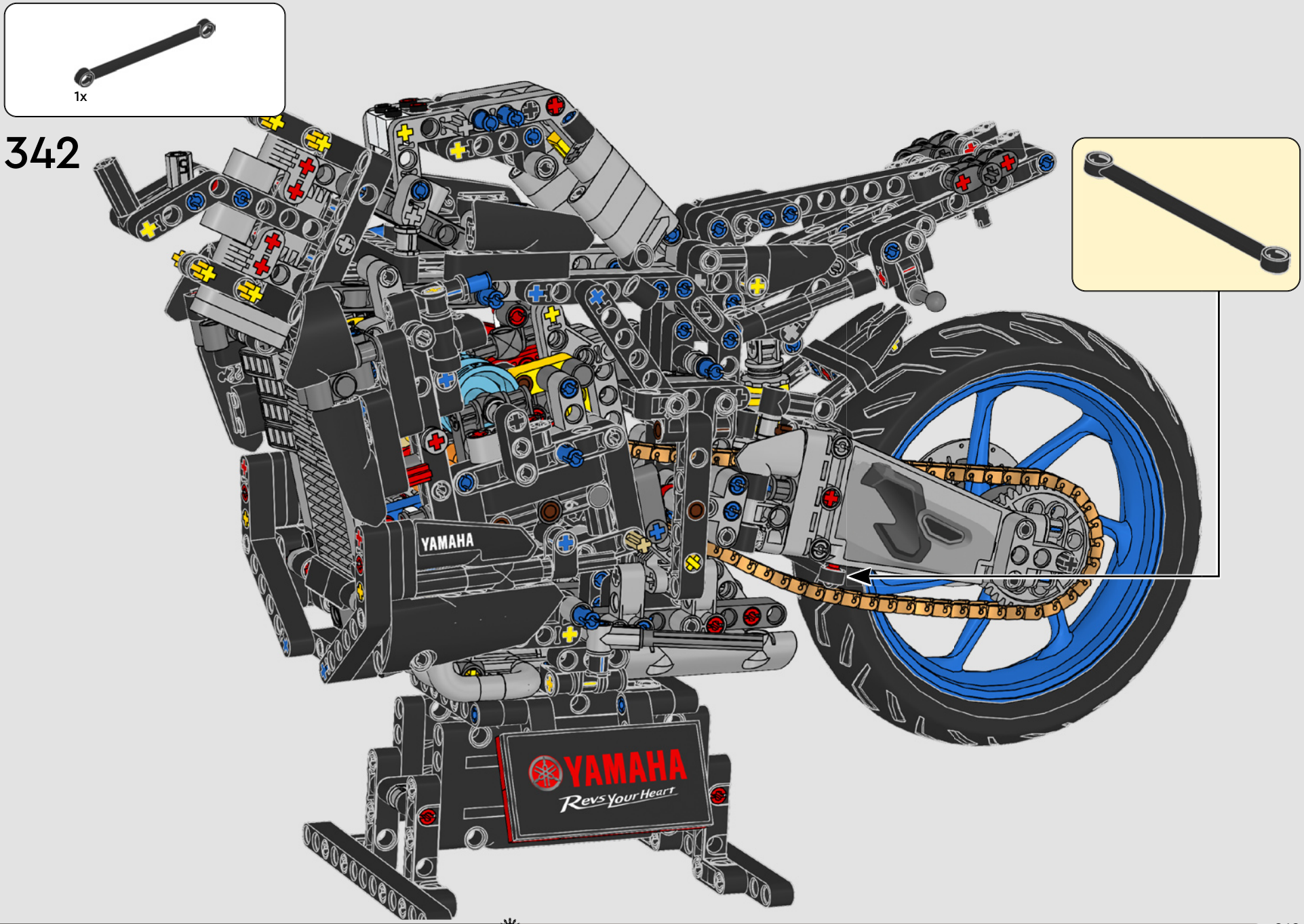
1x
342
YAMAHA
YAMAHA
Revs Your Heart

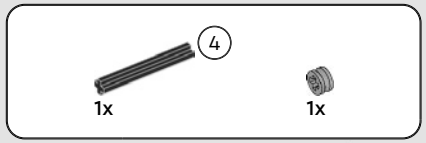

343

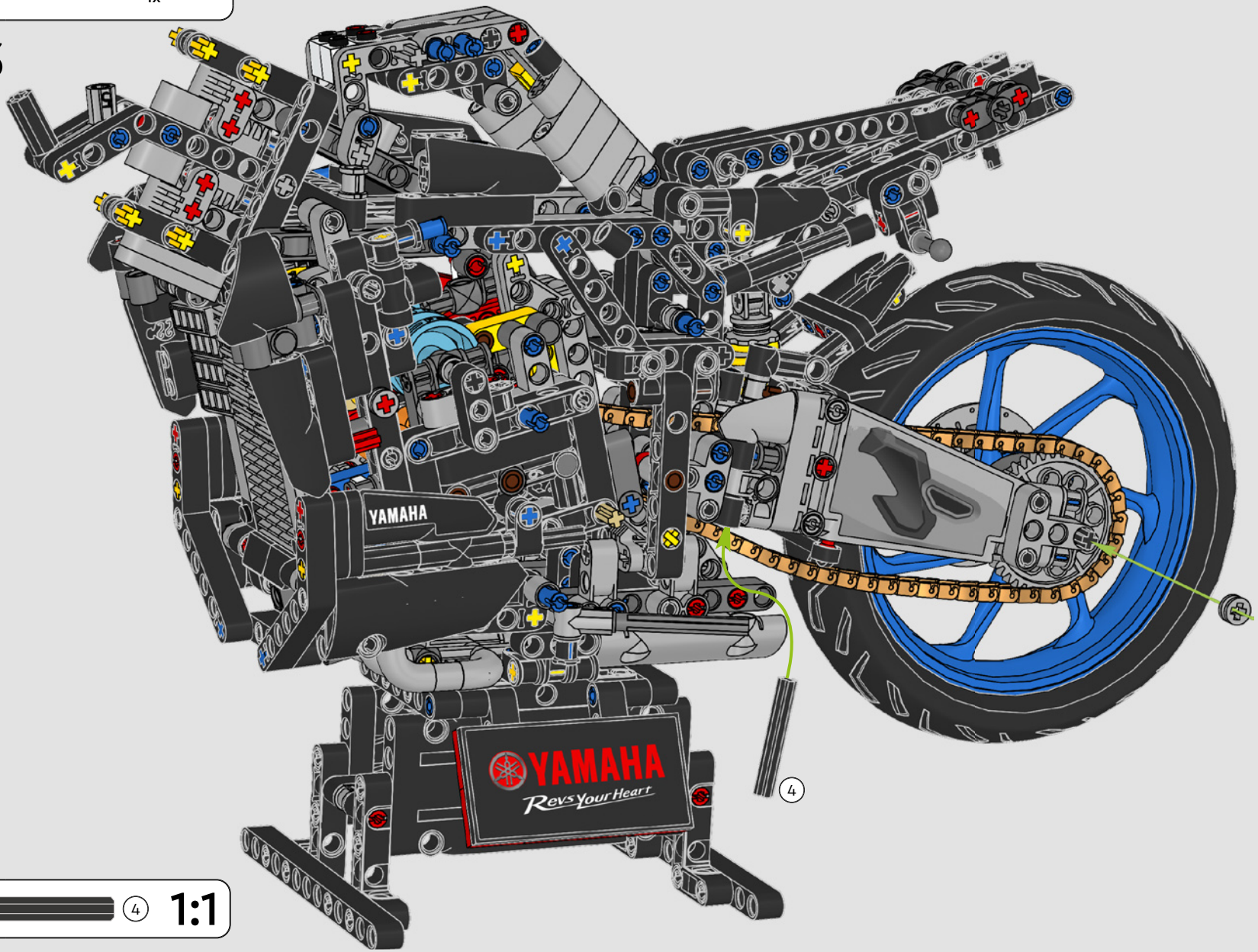

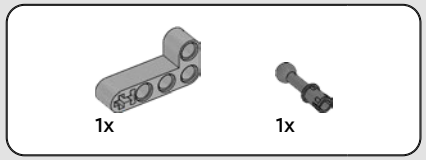

344

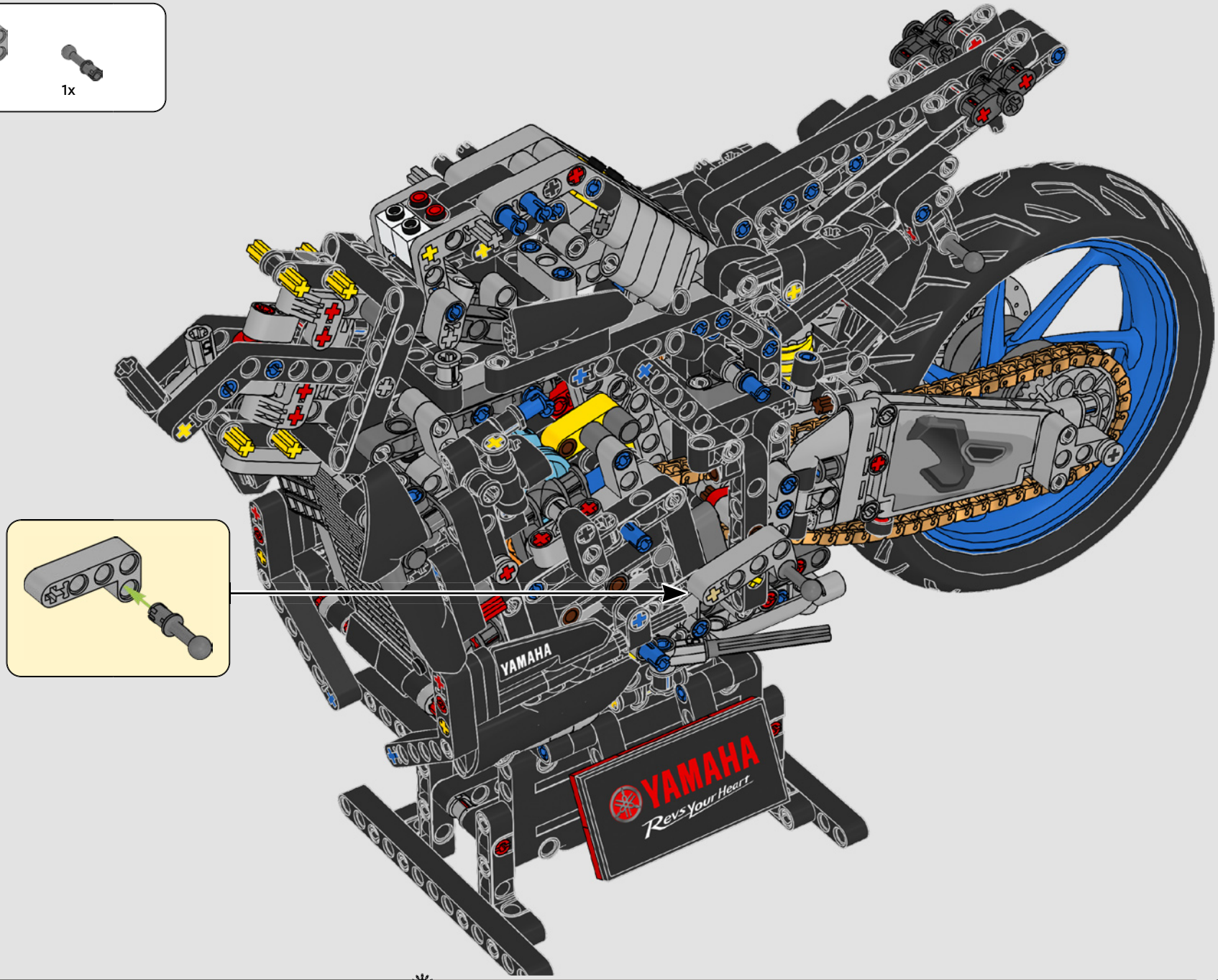

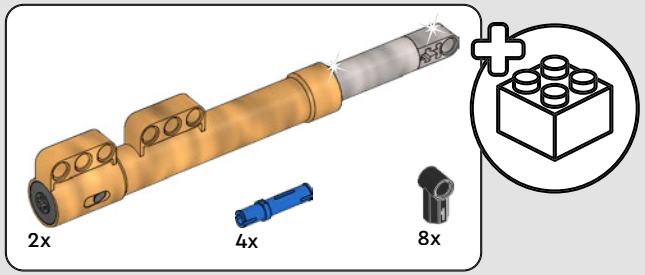

345

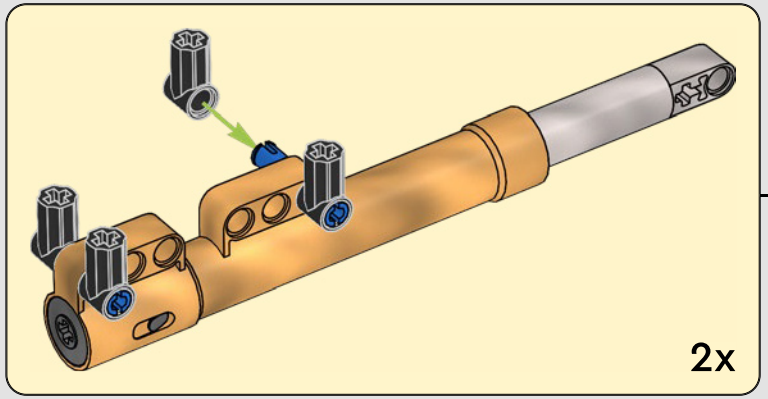

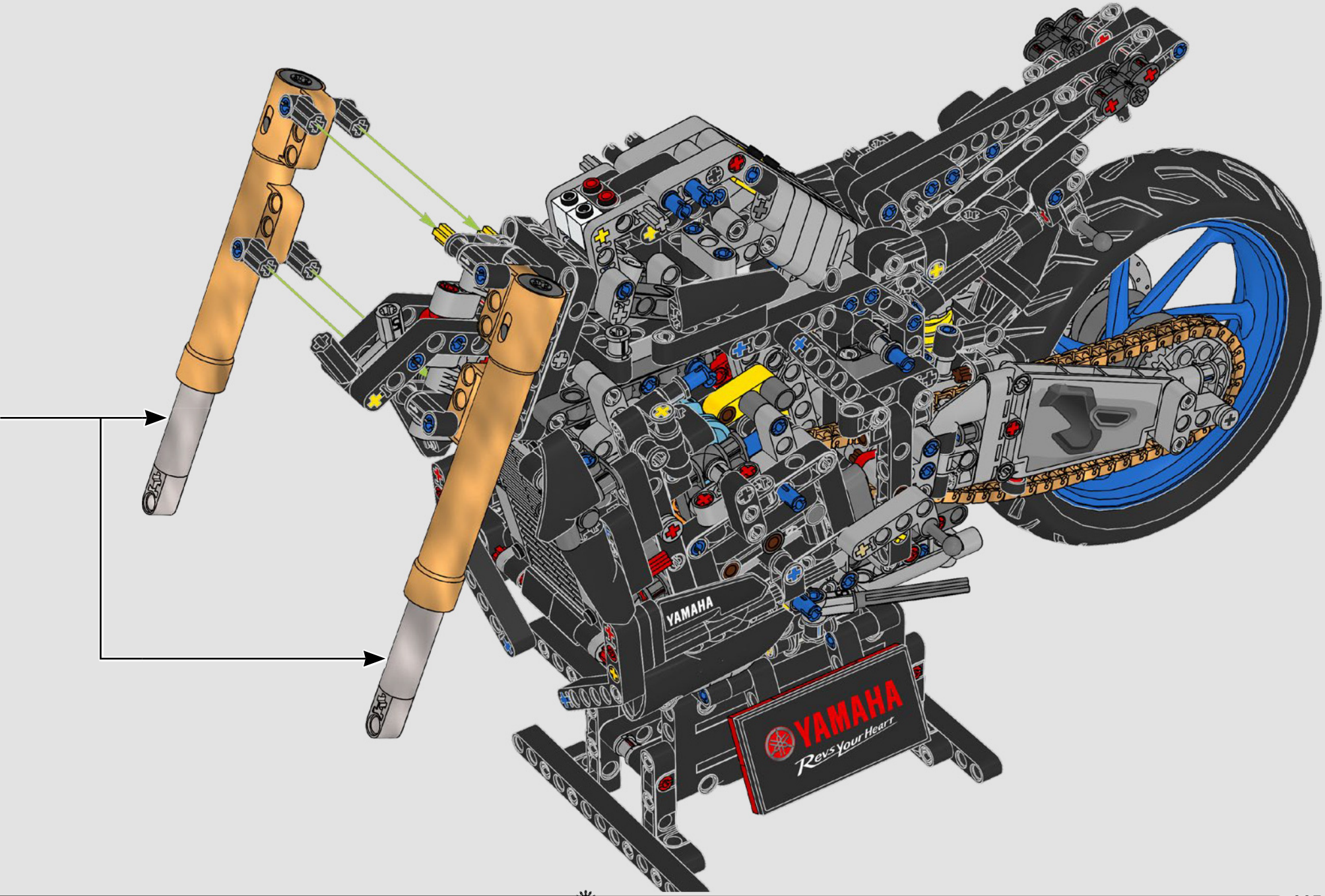
YAMAHA
YAMAHA
Revs Your Heart

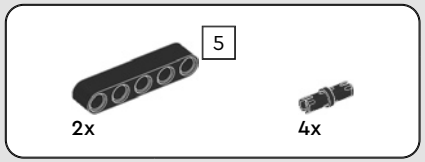

346

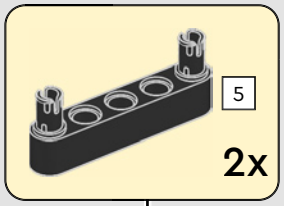

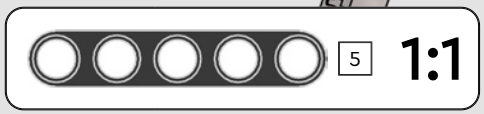

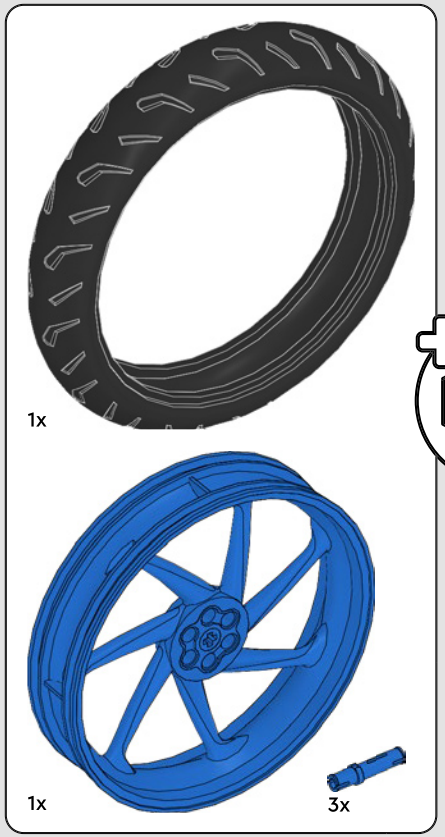

347

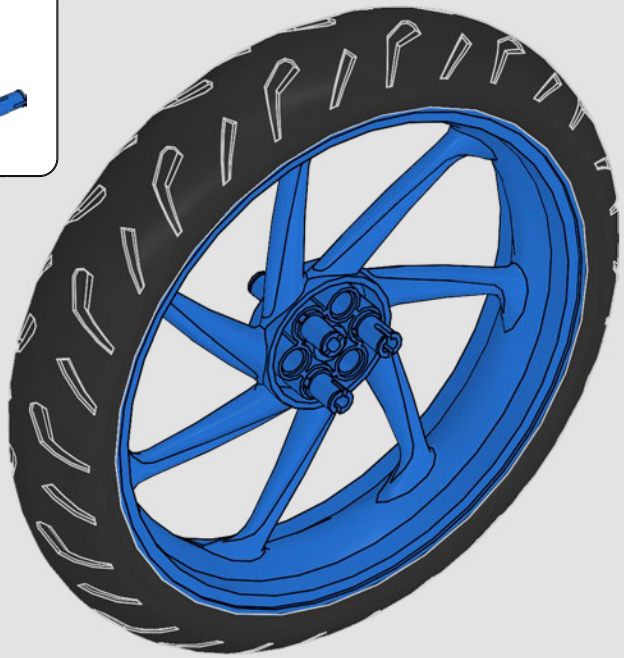

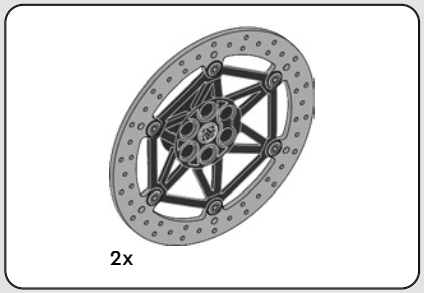

348

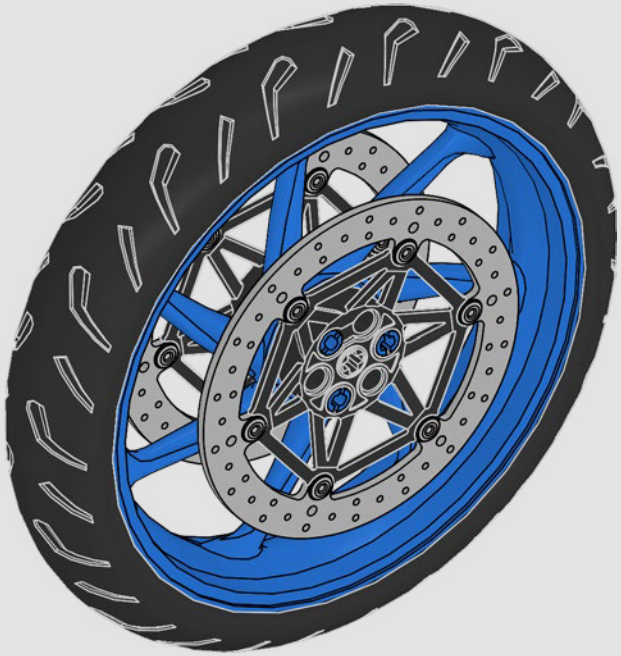

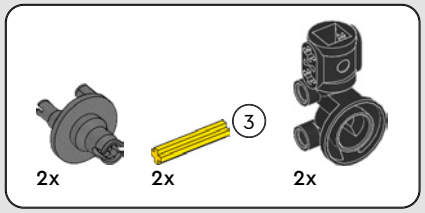

349

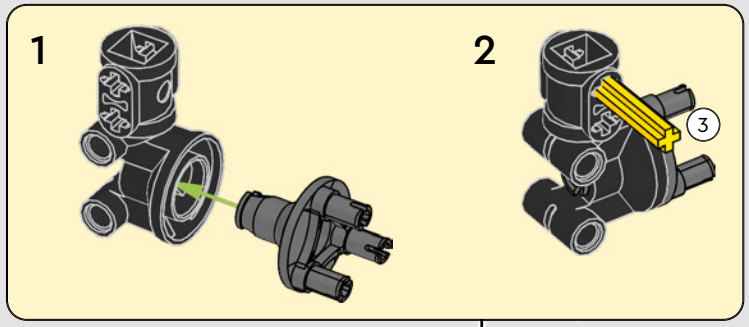

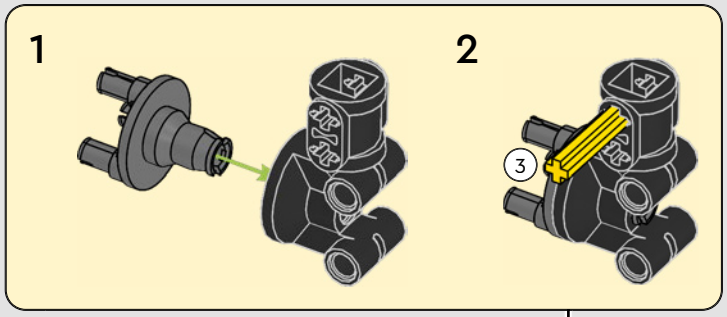

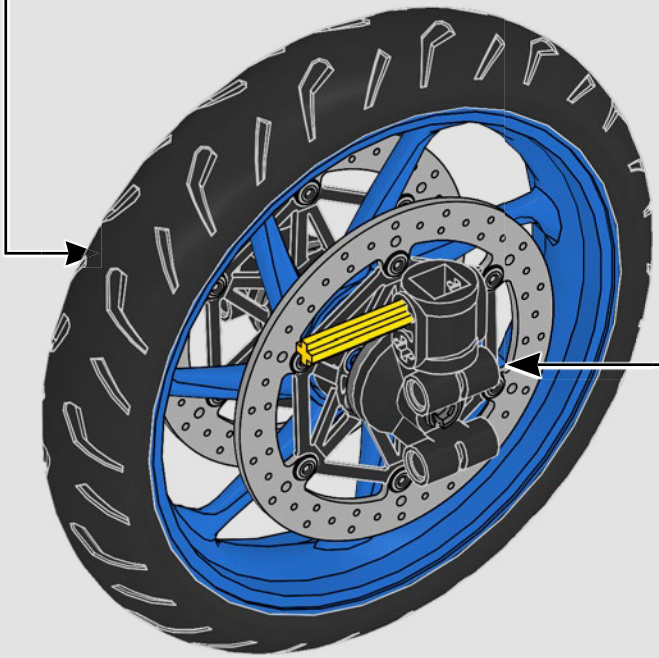

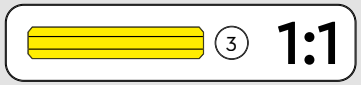

350

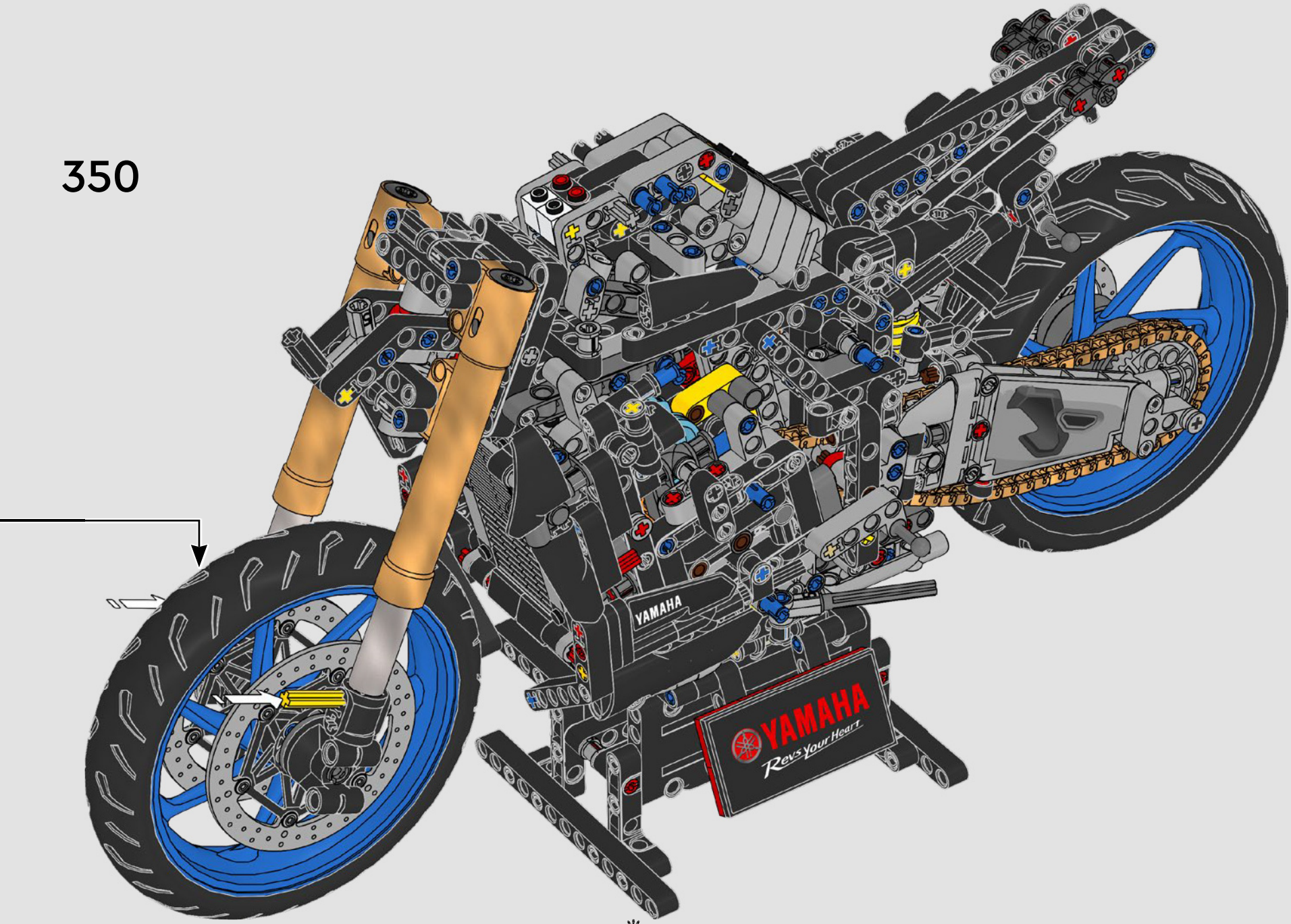

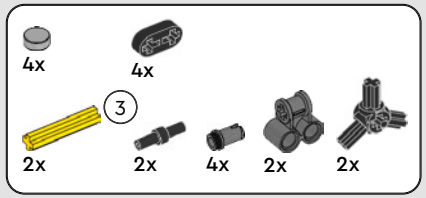

351

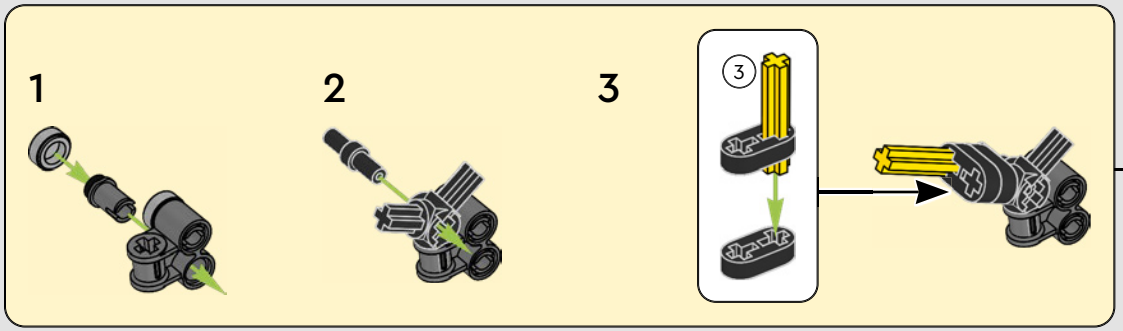

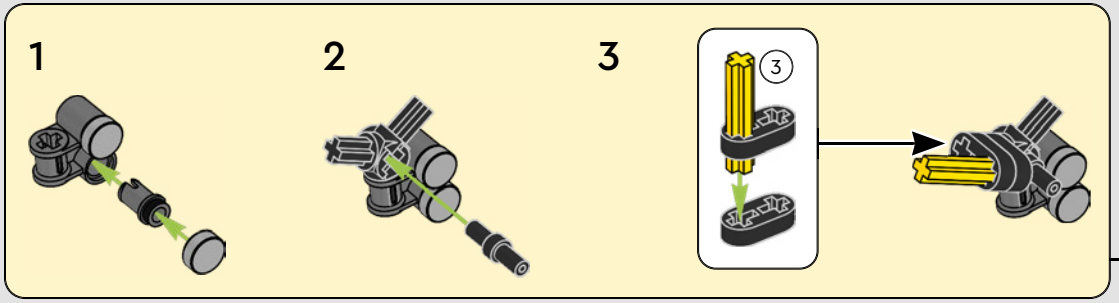

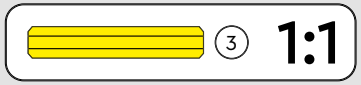

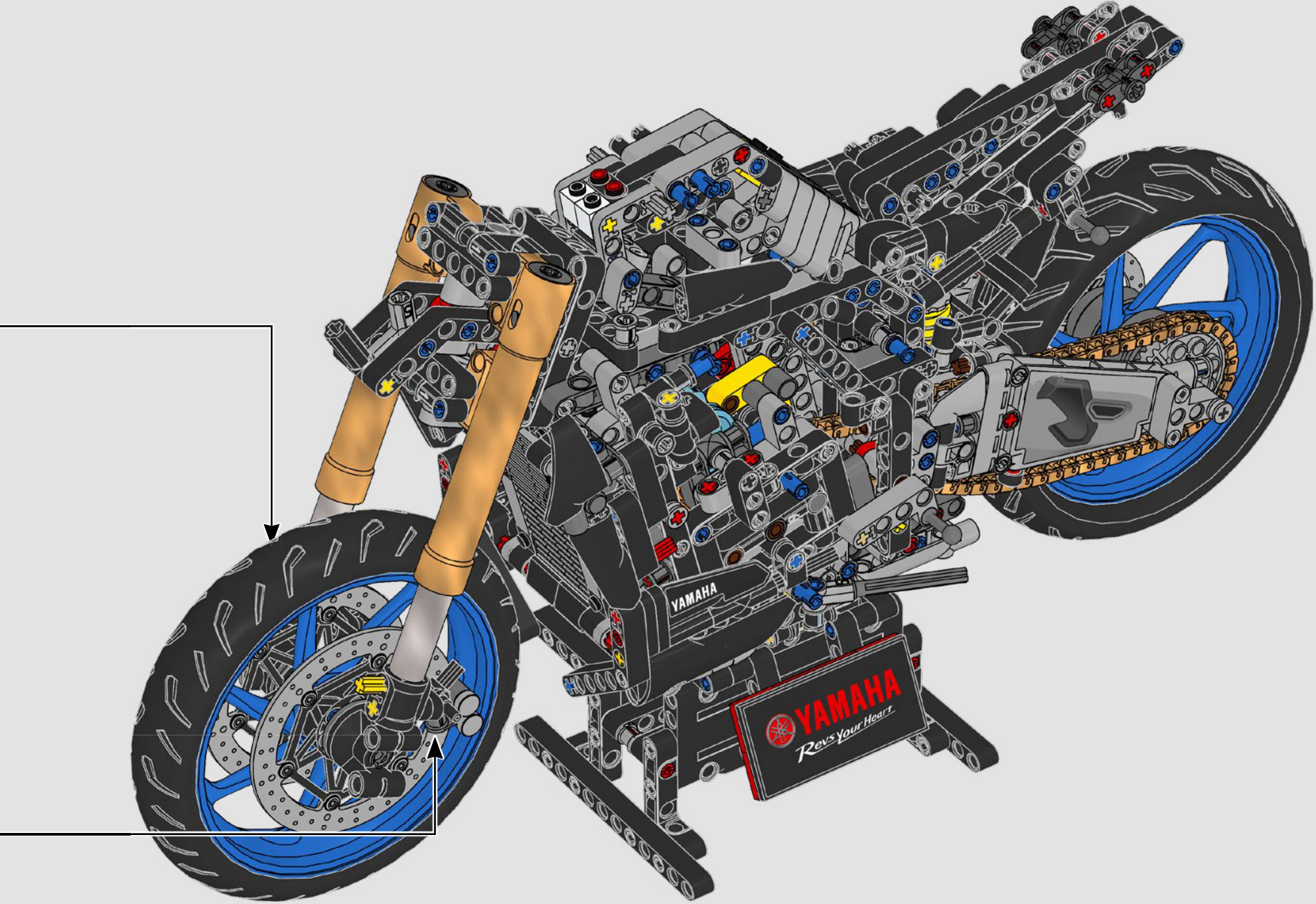
YAMAHA
YAMAHA
Revs Your Heart

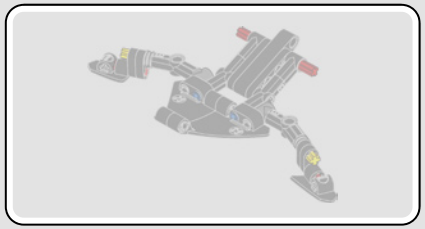

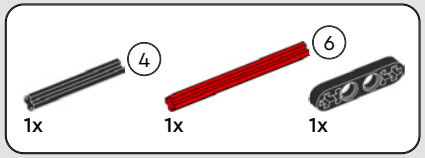

352

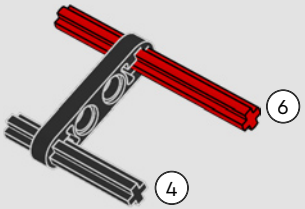

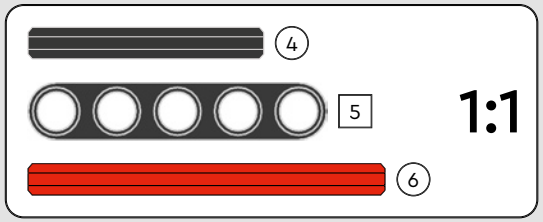

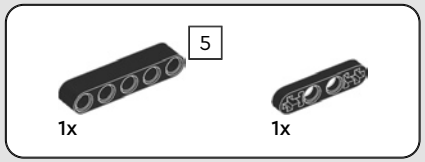

353

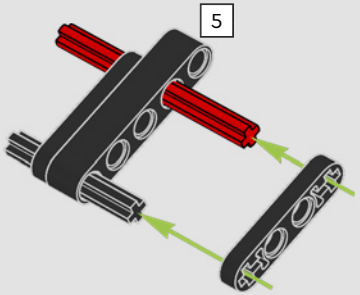

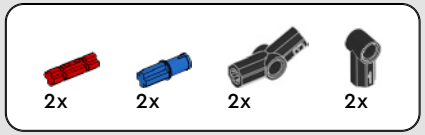

354

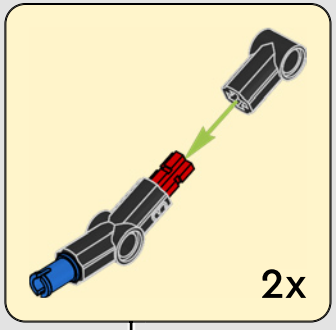

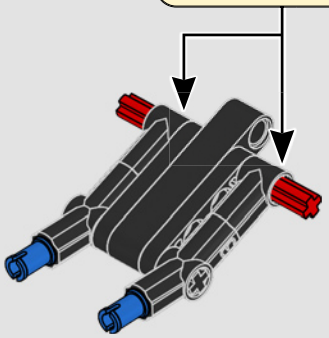

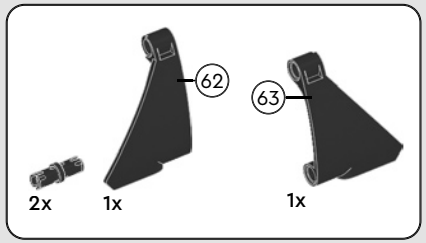

355

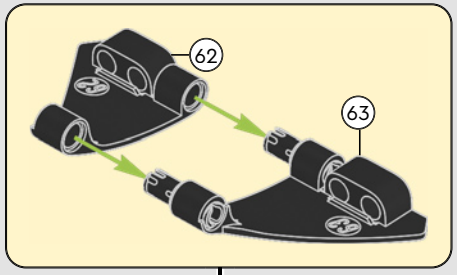

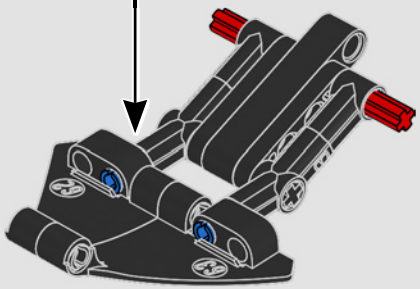

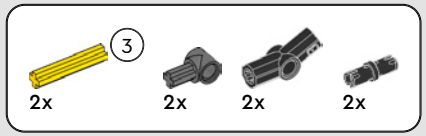

356

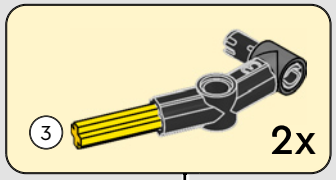

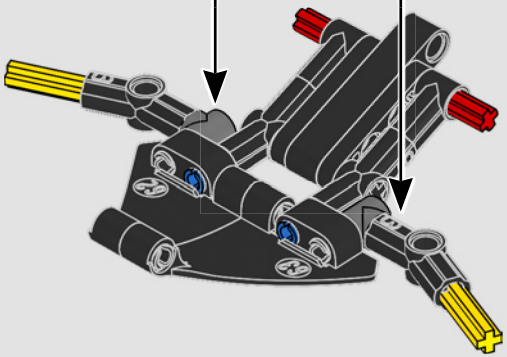

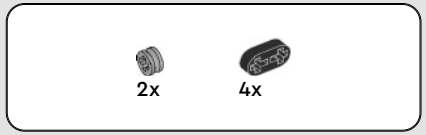

357

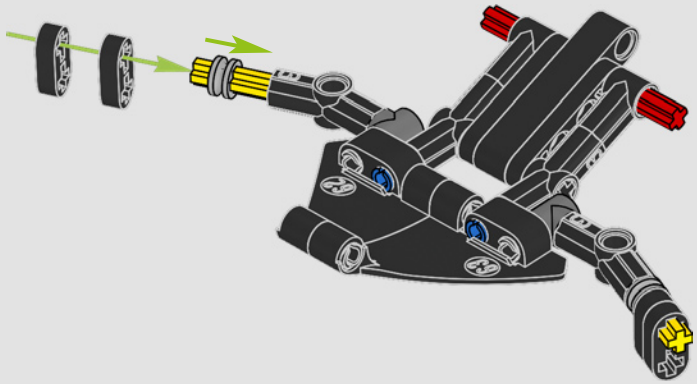

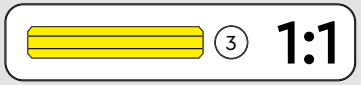

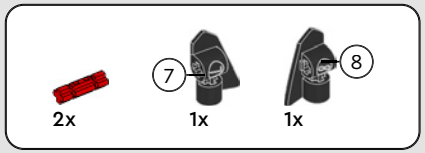

358

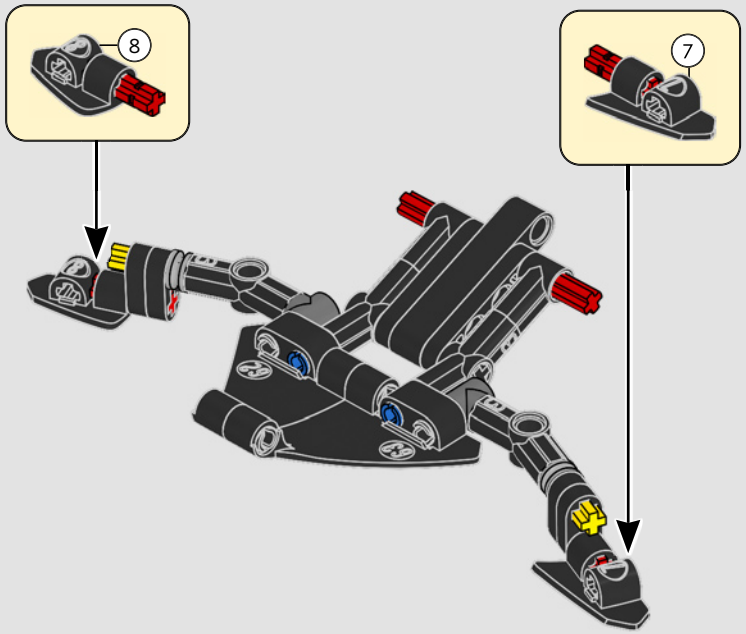

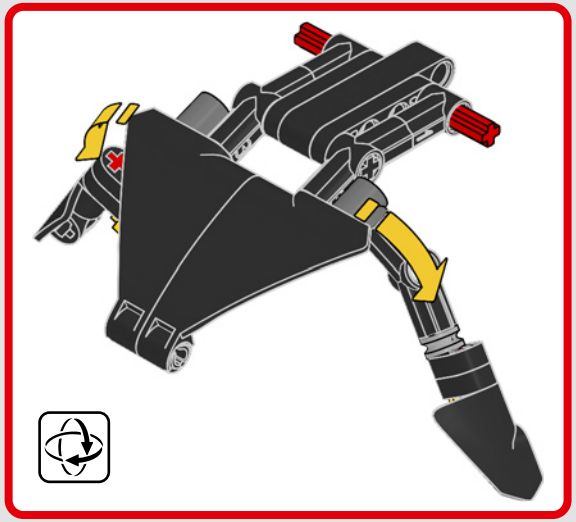

359

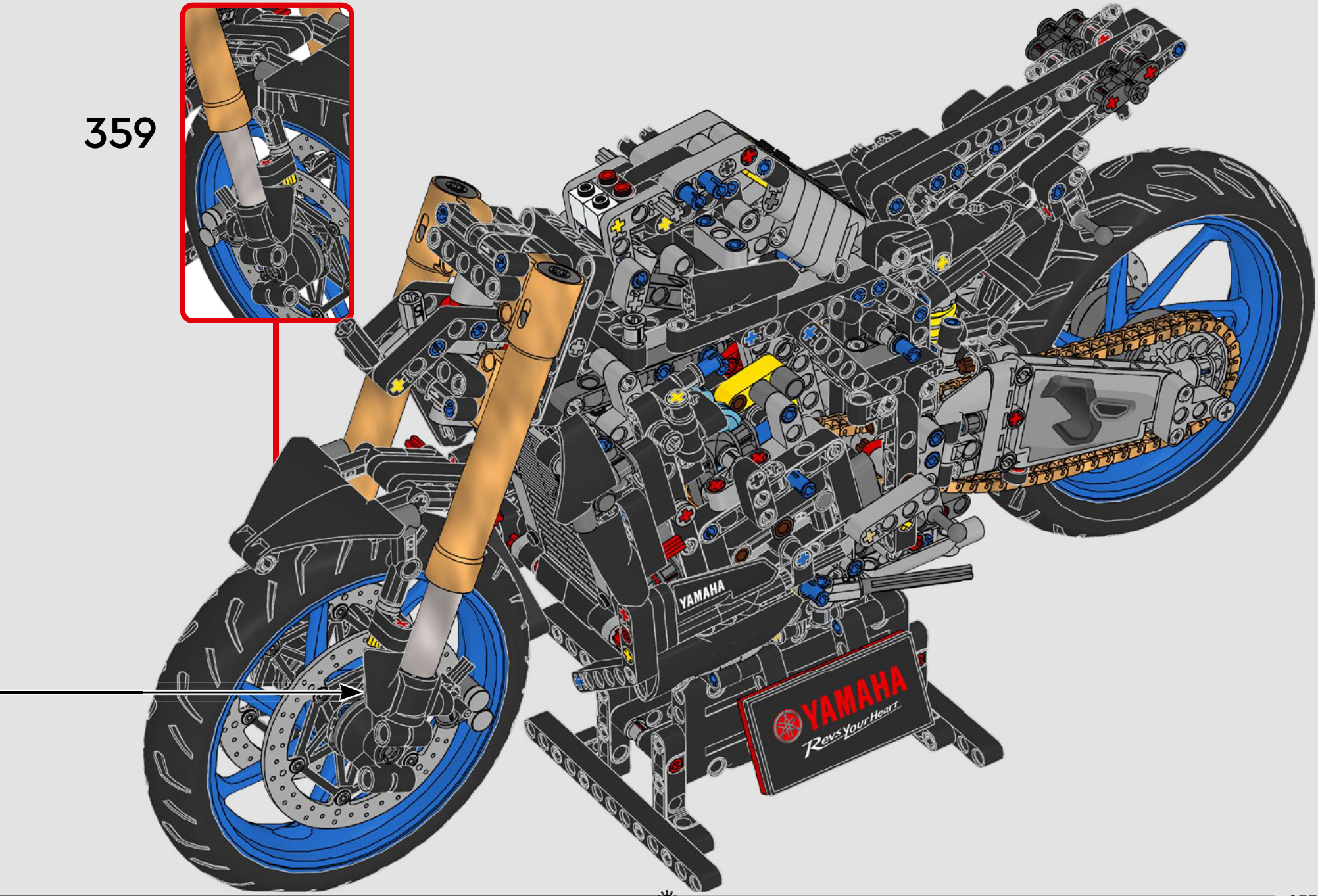

360

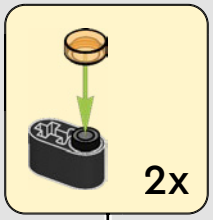

361

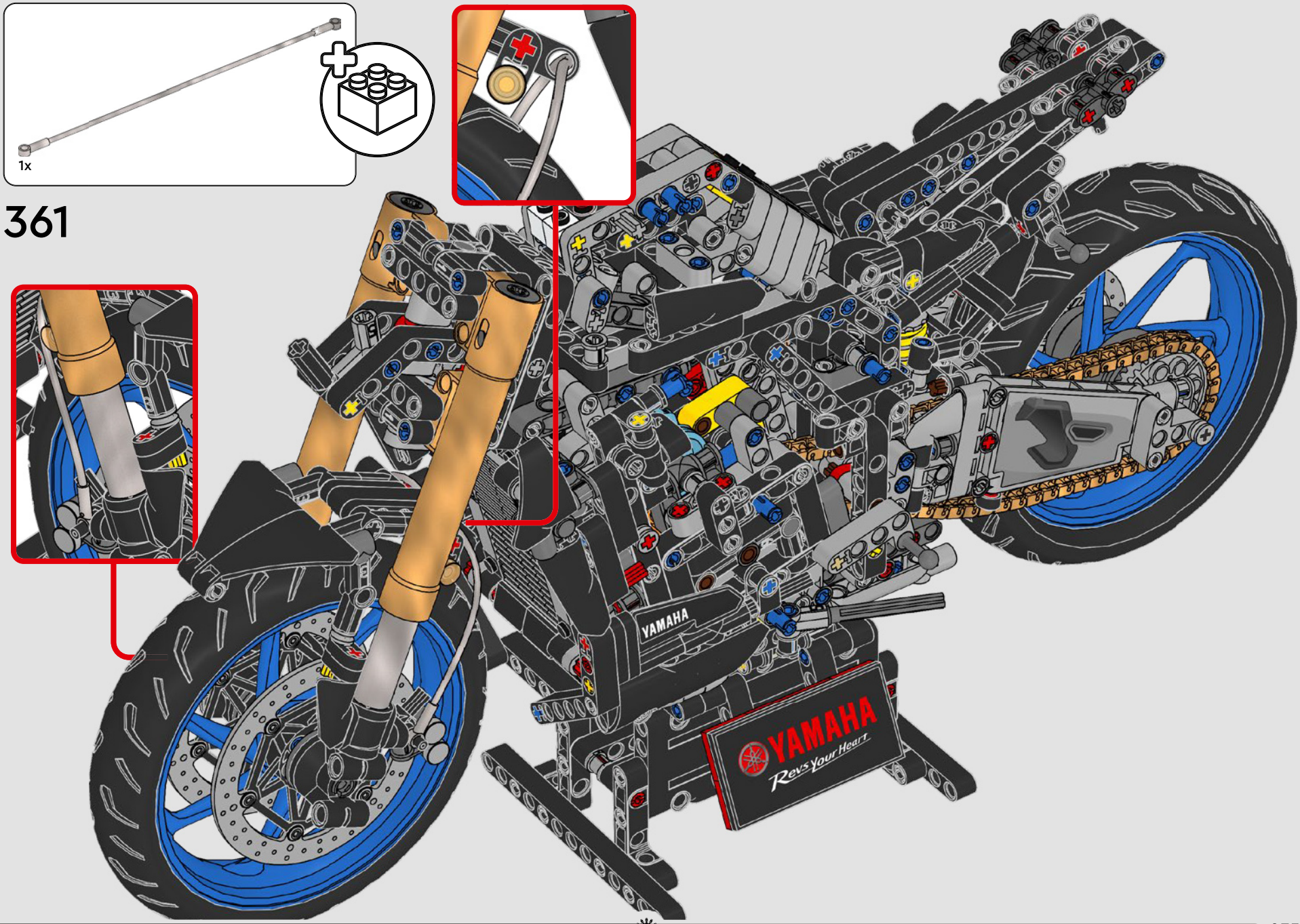

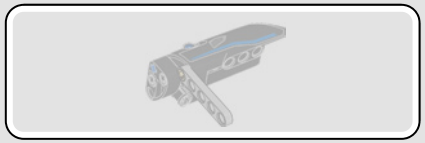

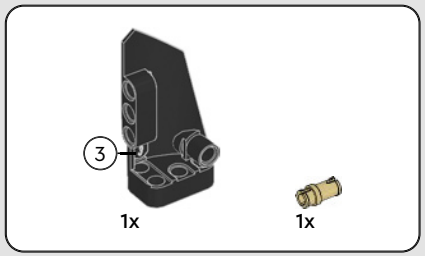

362

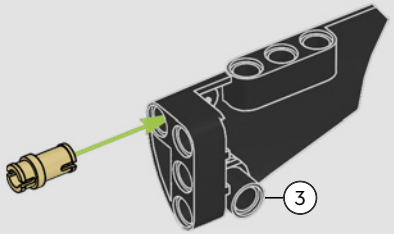

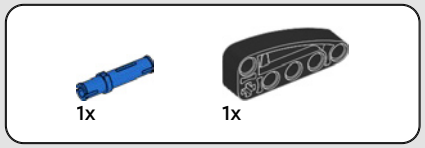

363

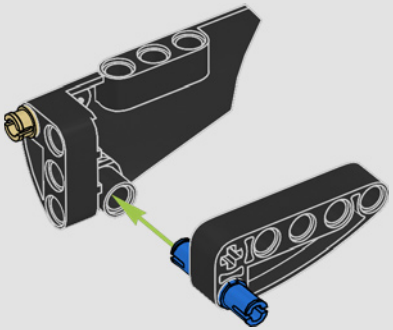

1x

364

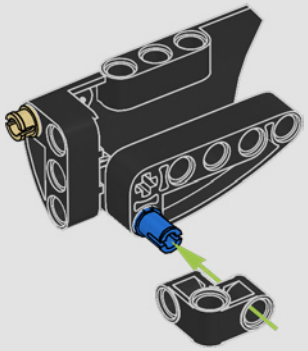

1x

1x

365

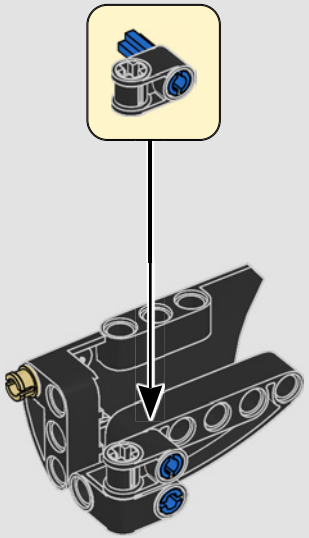

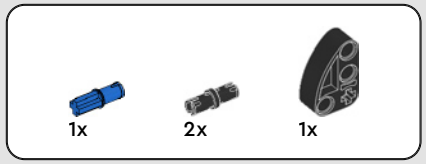

366

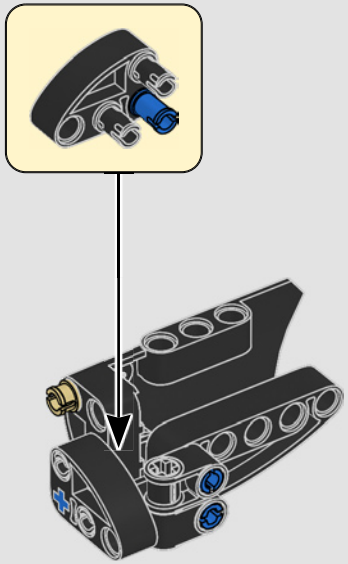

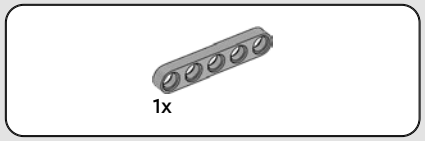

367

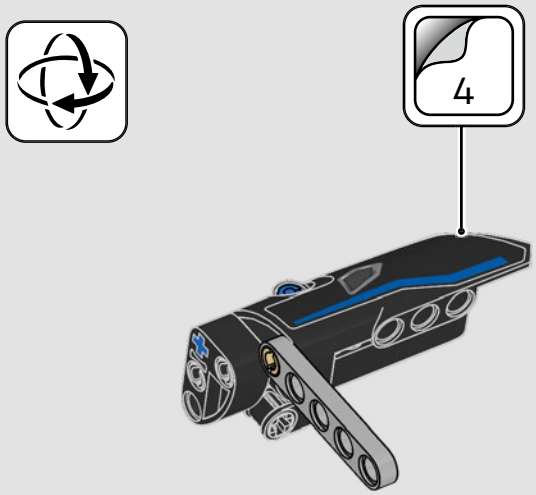

368

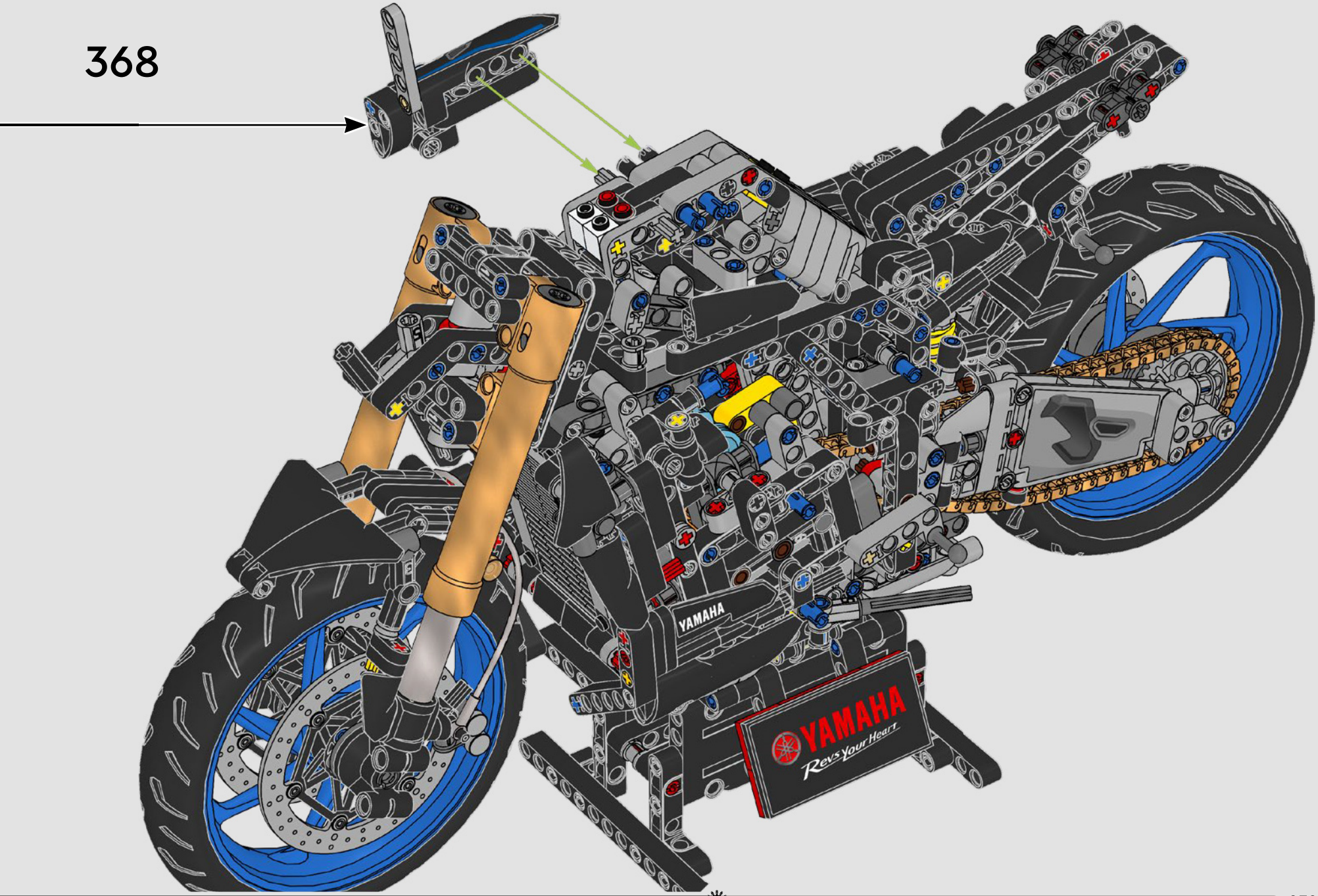

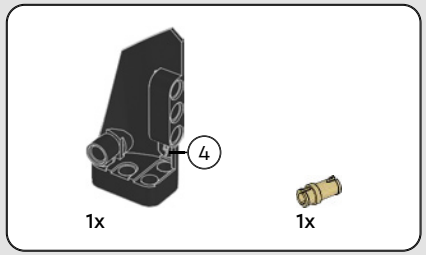

369

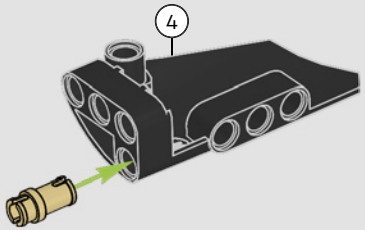

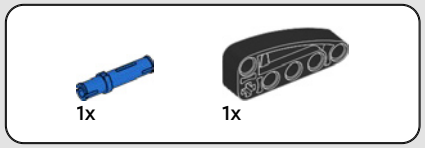

370

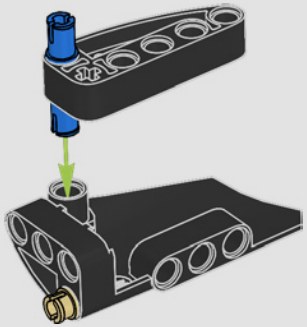

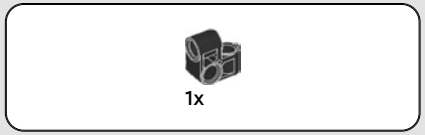

371

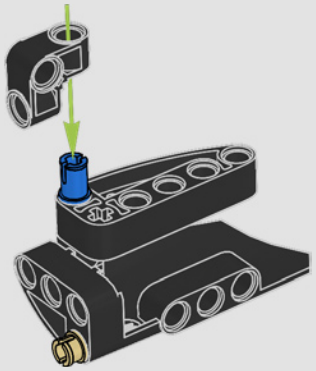

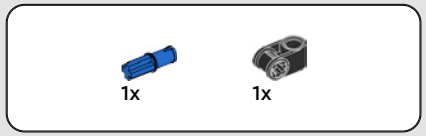

372

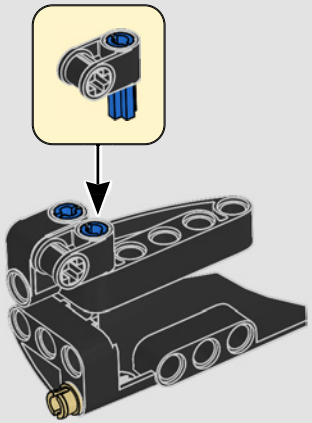

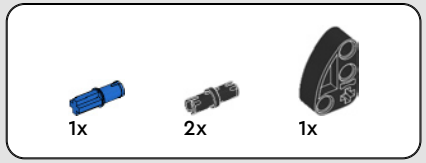

373

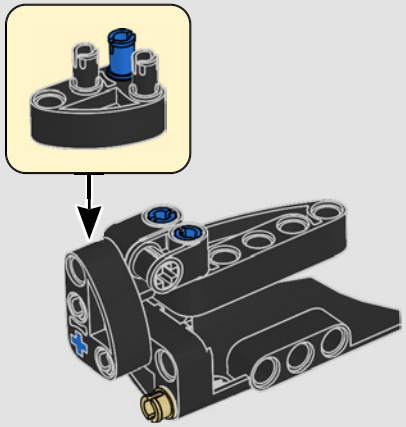

374

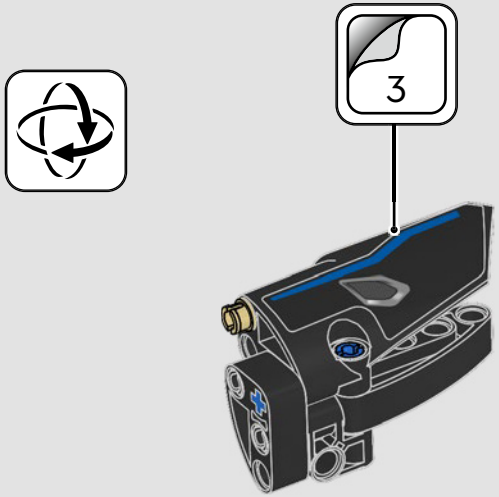

375

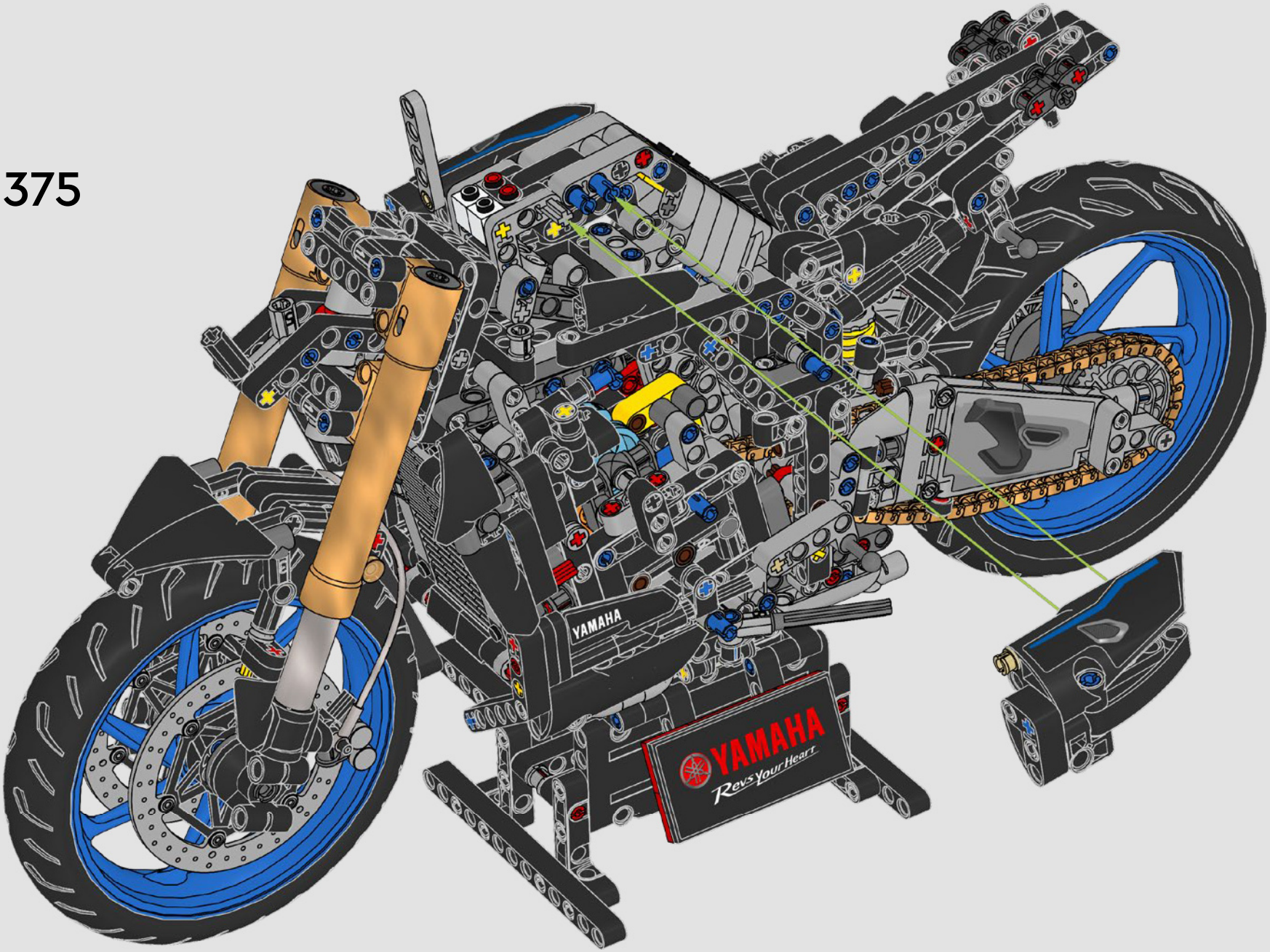

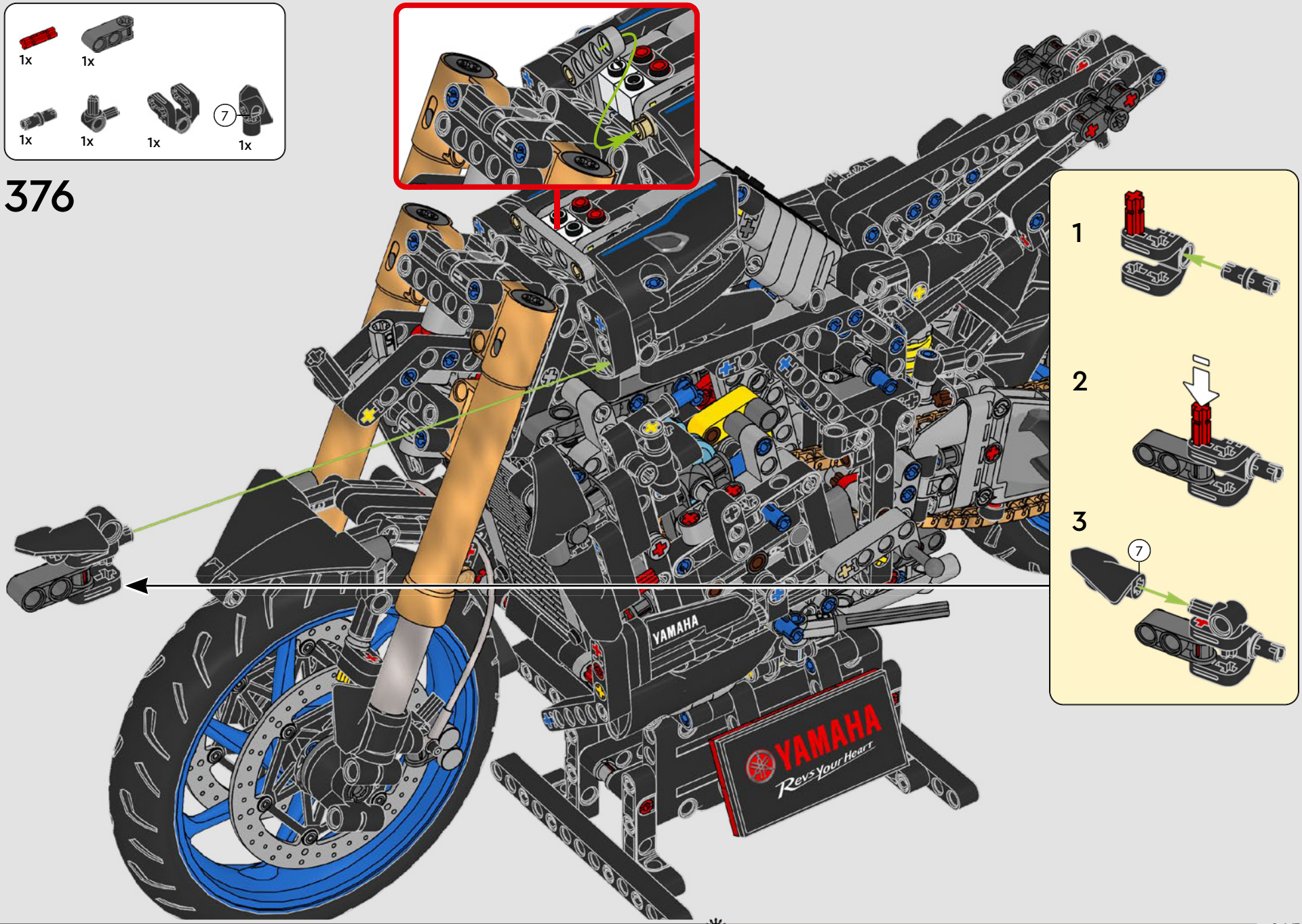
1x
1x
1x
1x
1x
7
1x
376
1
2
3
7
YAMAHA
YAMAHA
Revs Your Heart

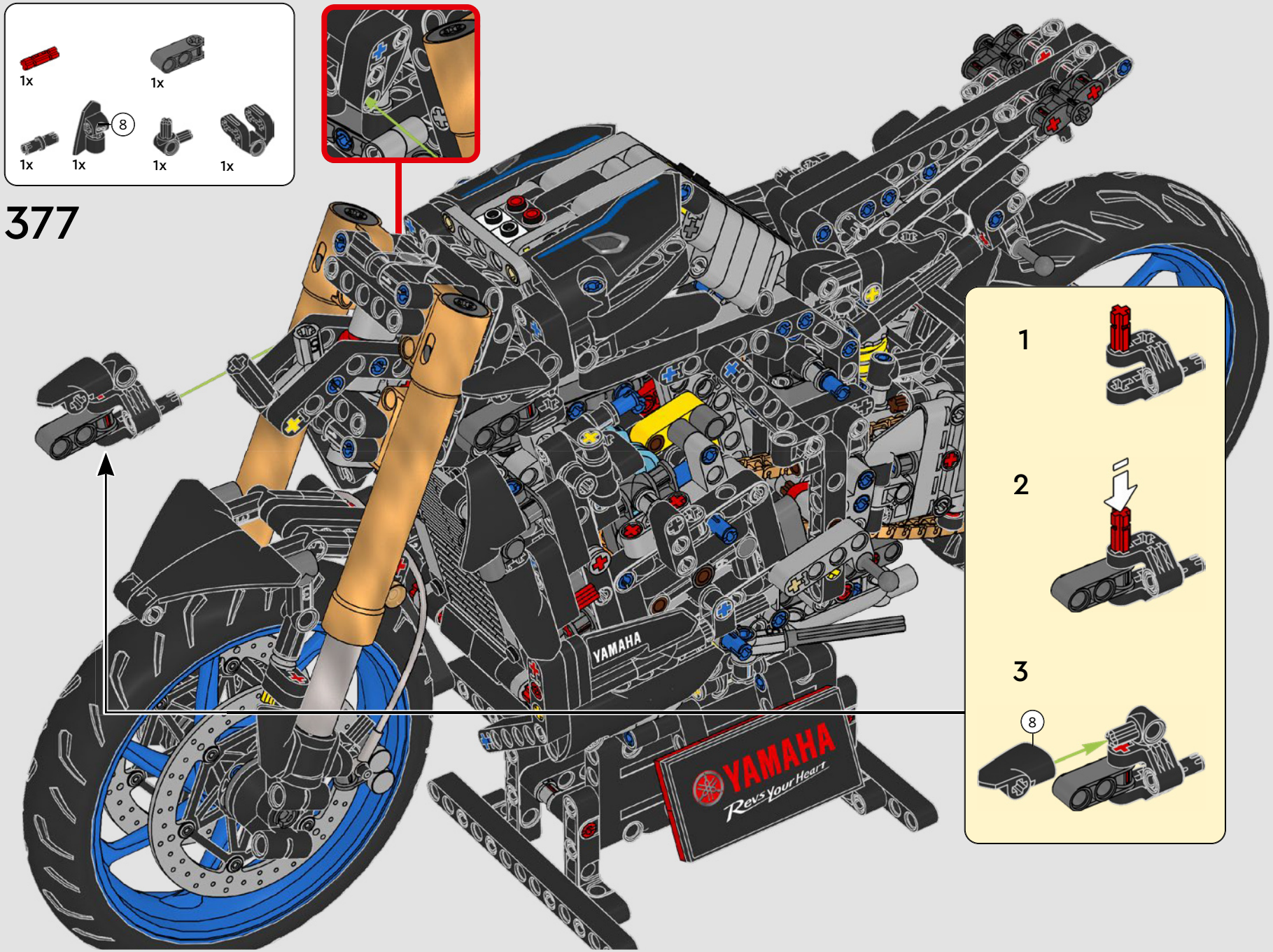
1x
1x
8
1x
1x
1x
1x
377
YAMAHA
YAMAHA
Revs Your Heart
1
2
3
8

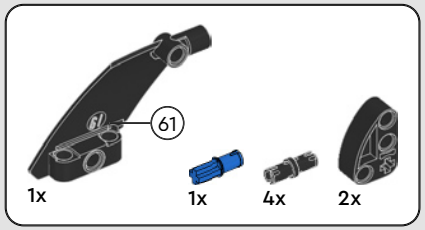

378

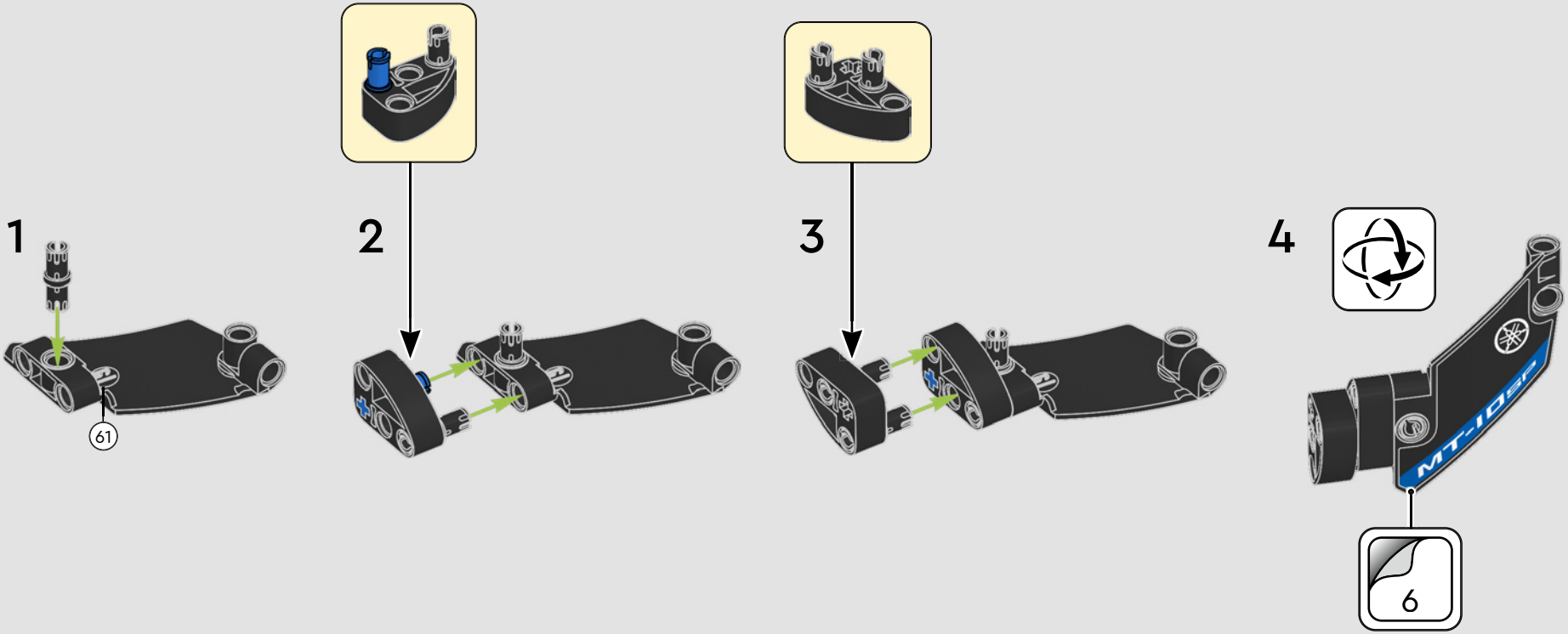

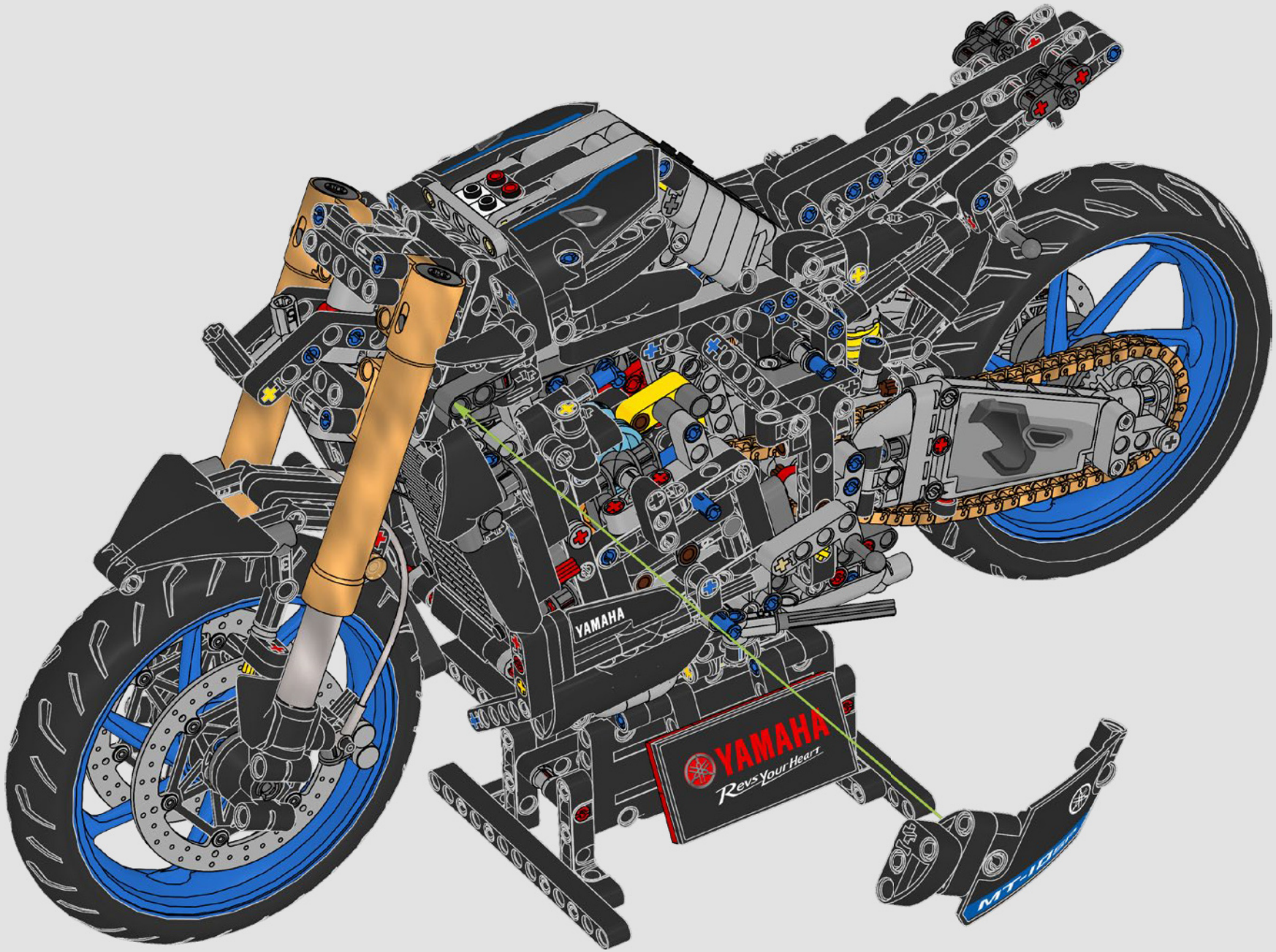
YAMAHA
YAMAHA
Revs Your Heart
MT-10SP

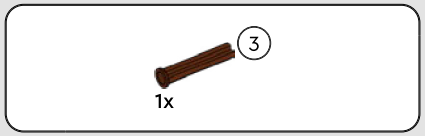

379

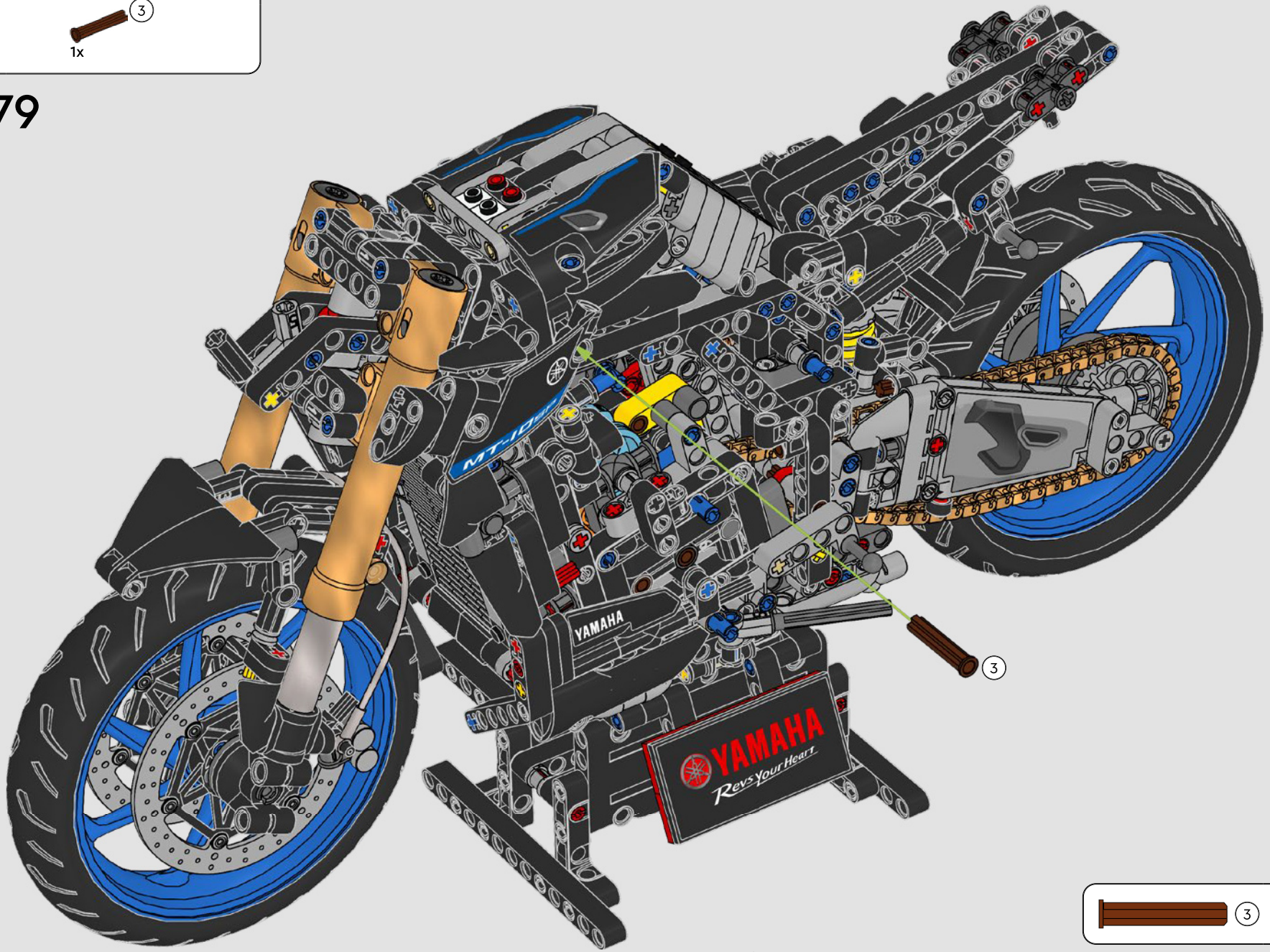

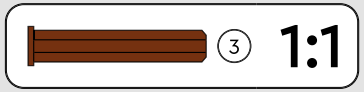

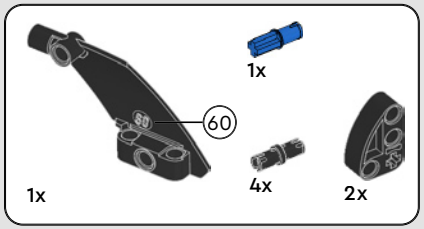

380

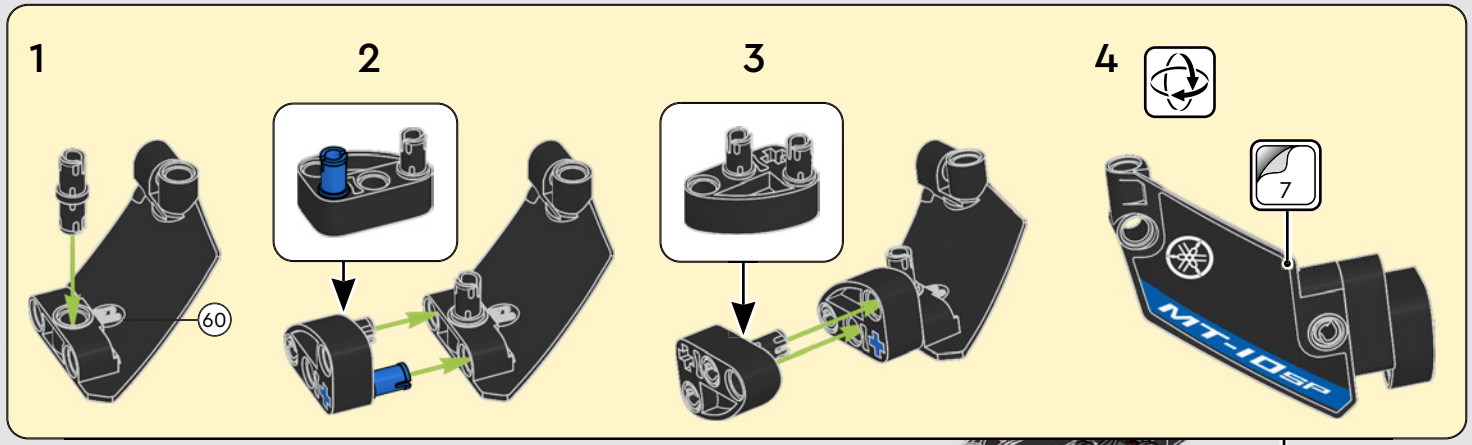

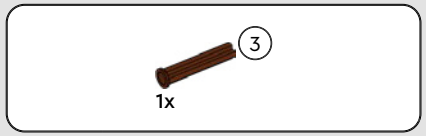

381

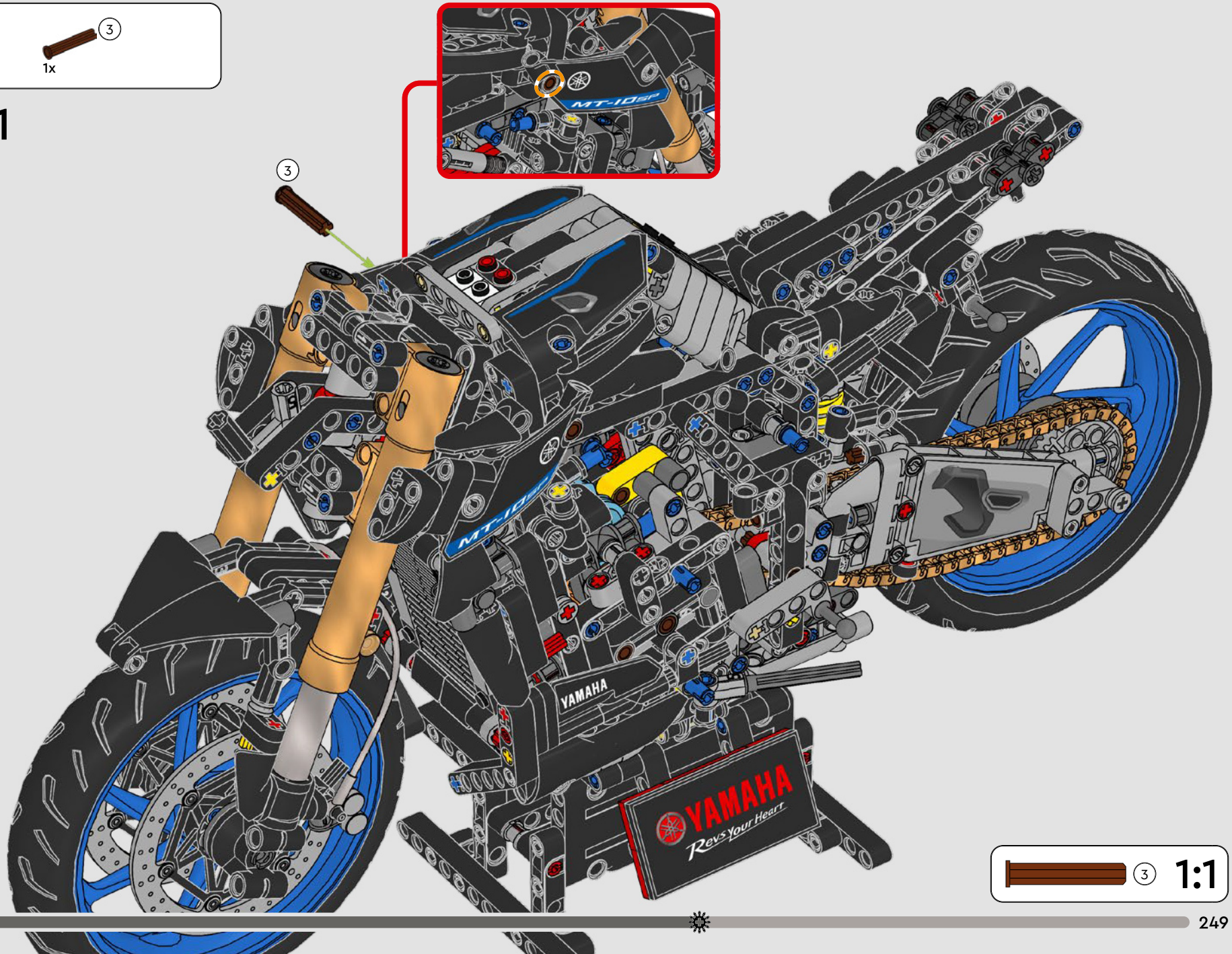

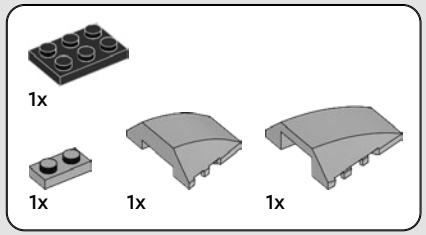

382

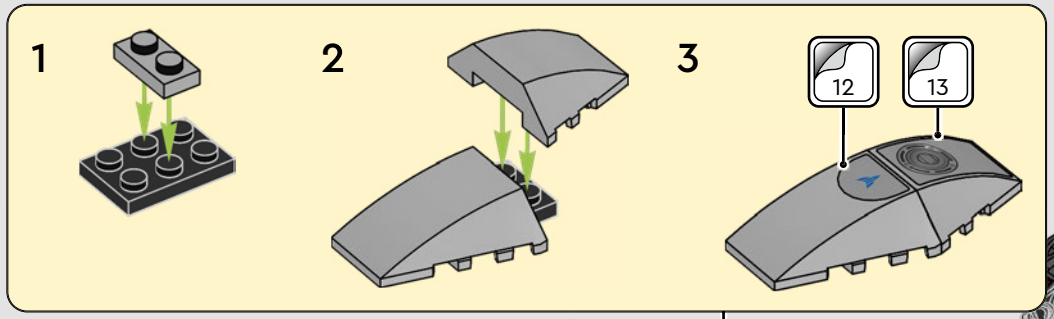

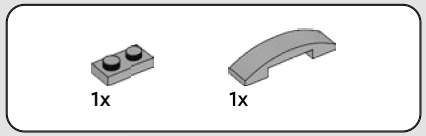

383

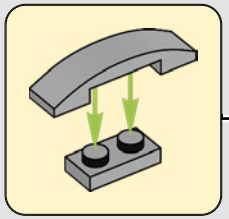

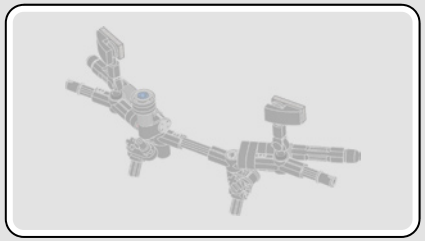

384

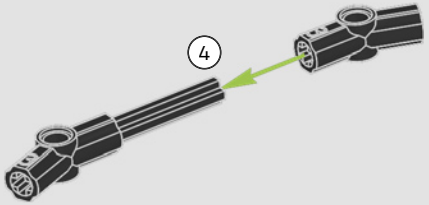

1:1

385

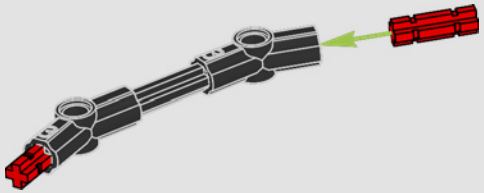

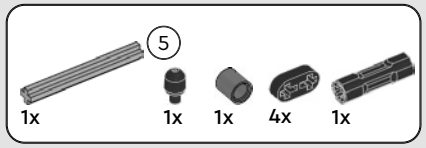

386

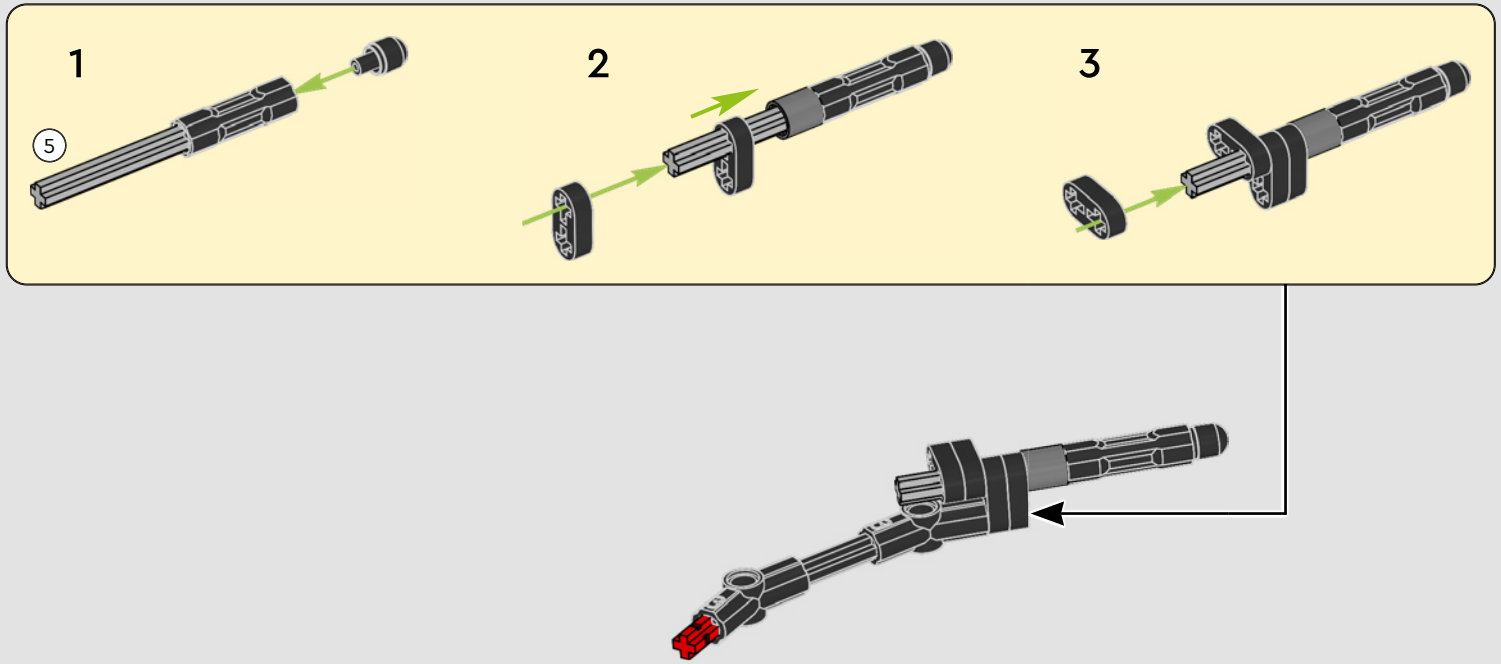

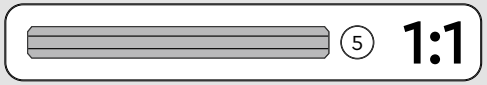

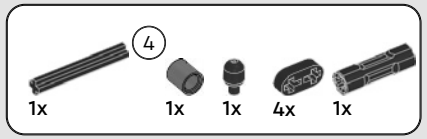

387

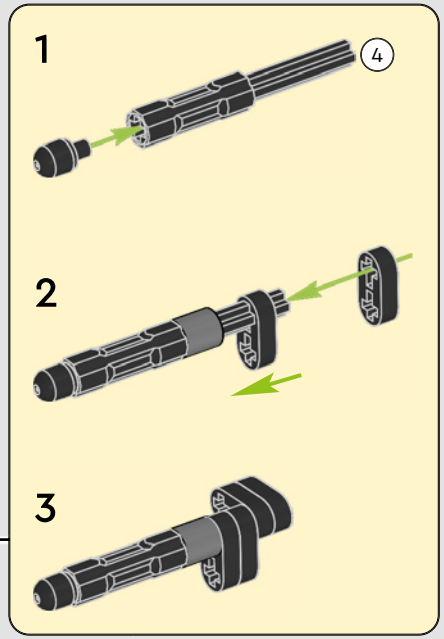

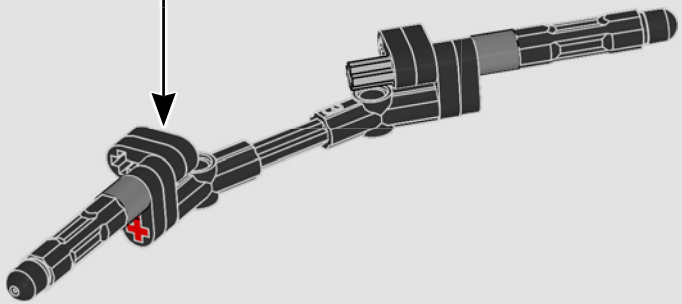

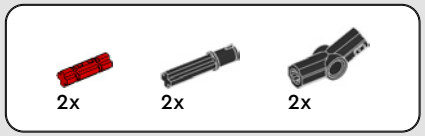

388

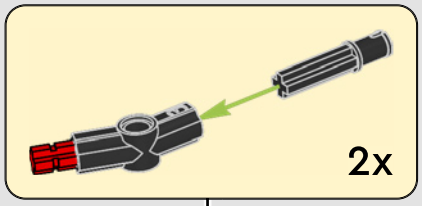

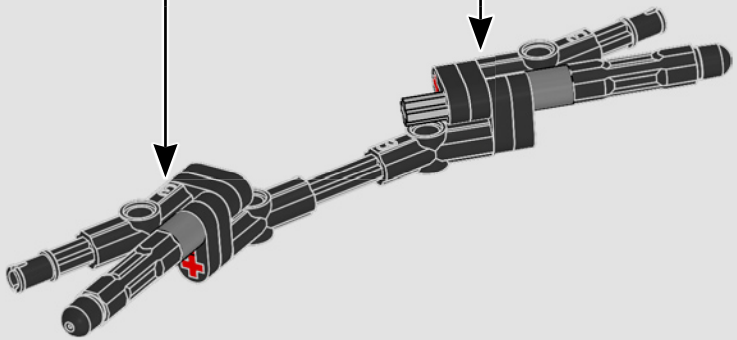

389

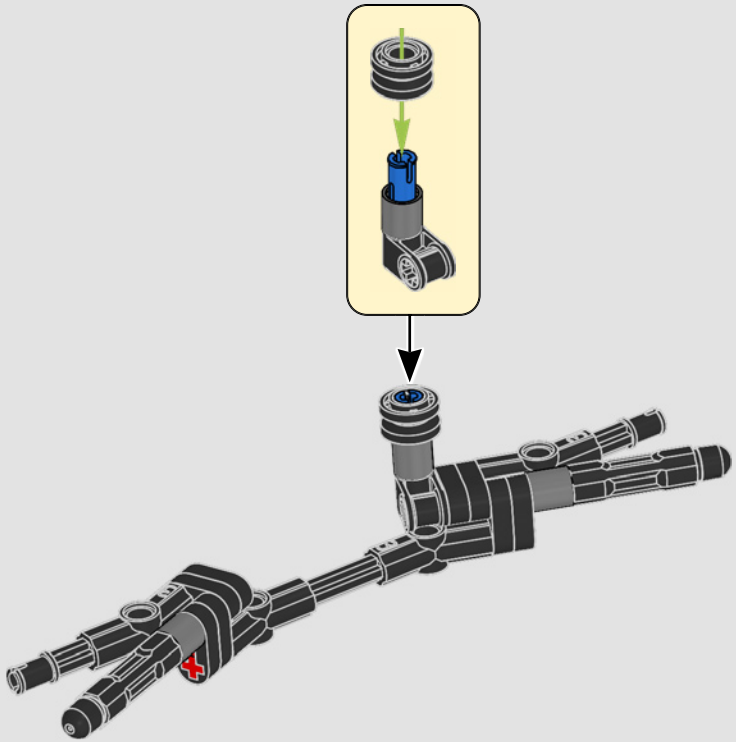

390

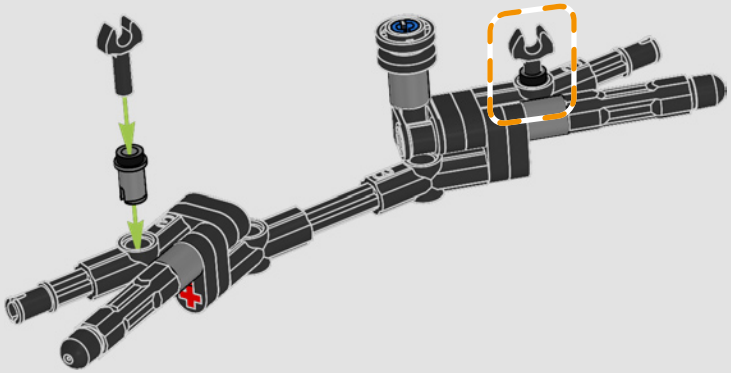

391

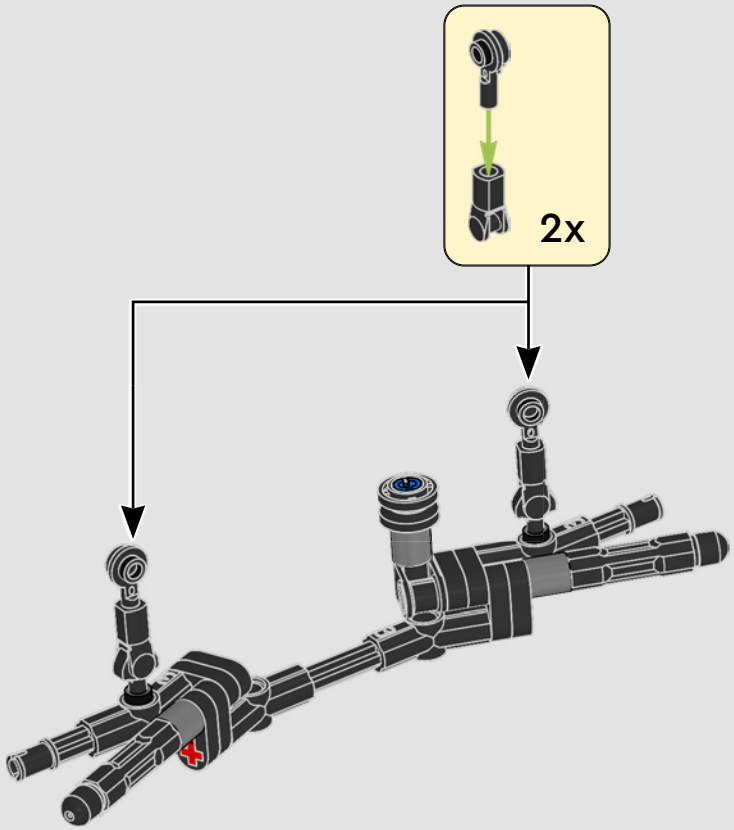

392

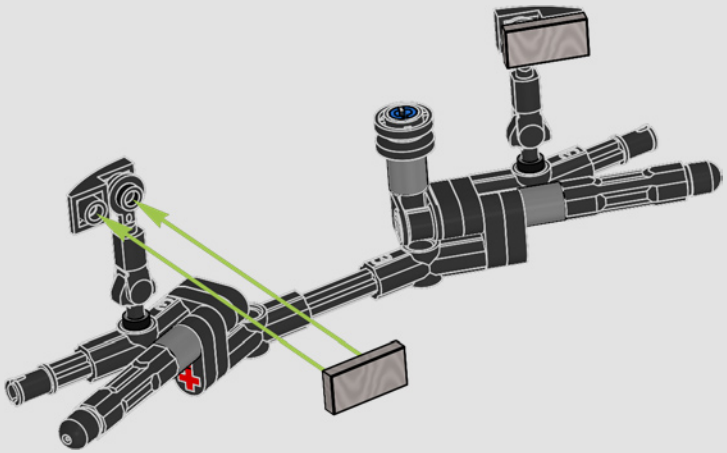

393

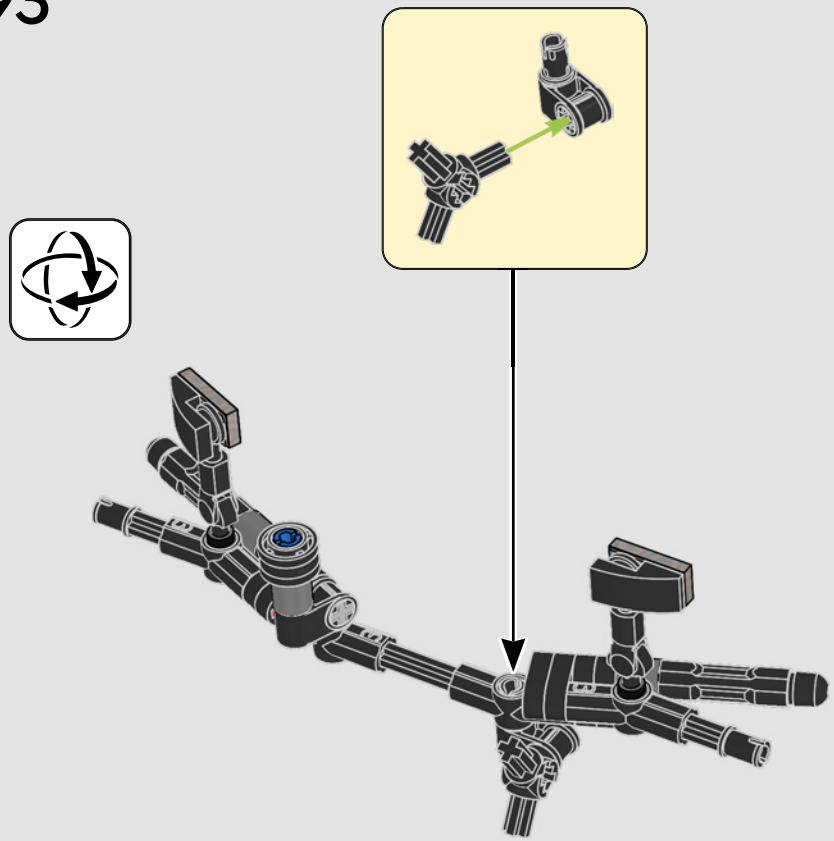

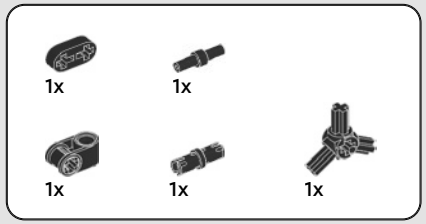

394

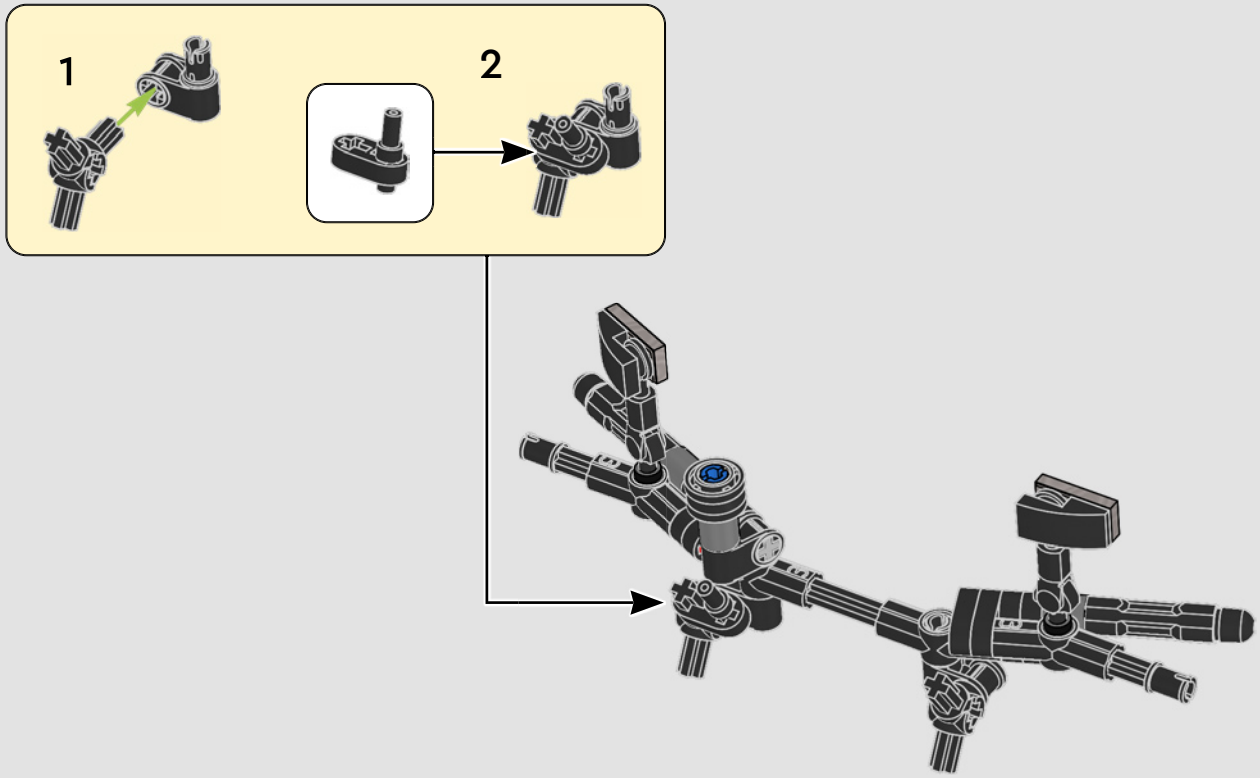

395

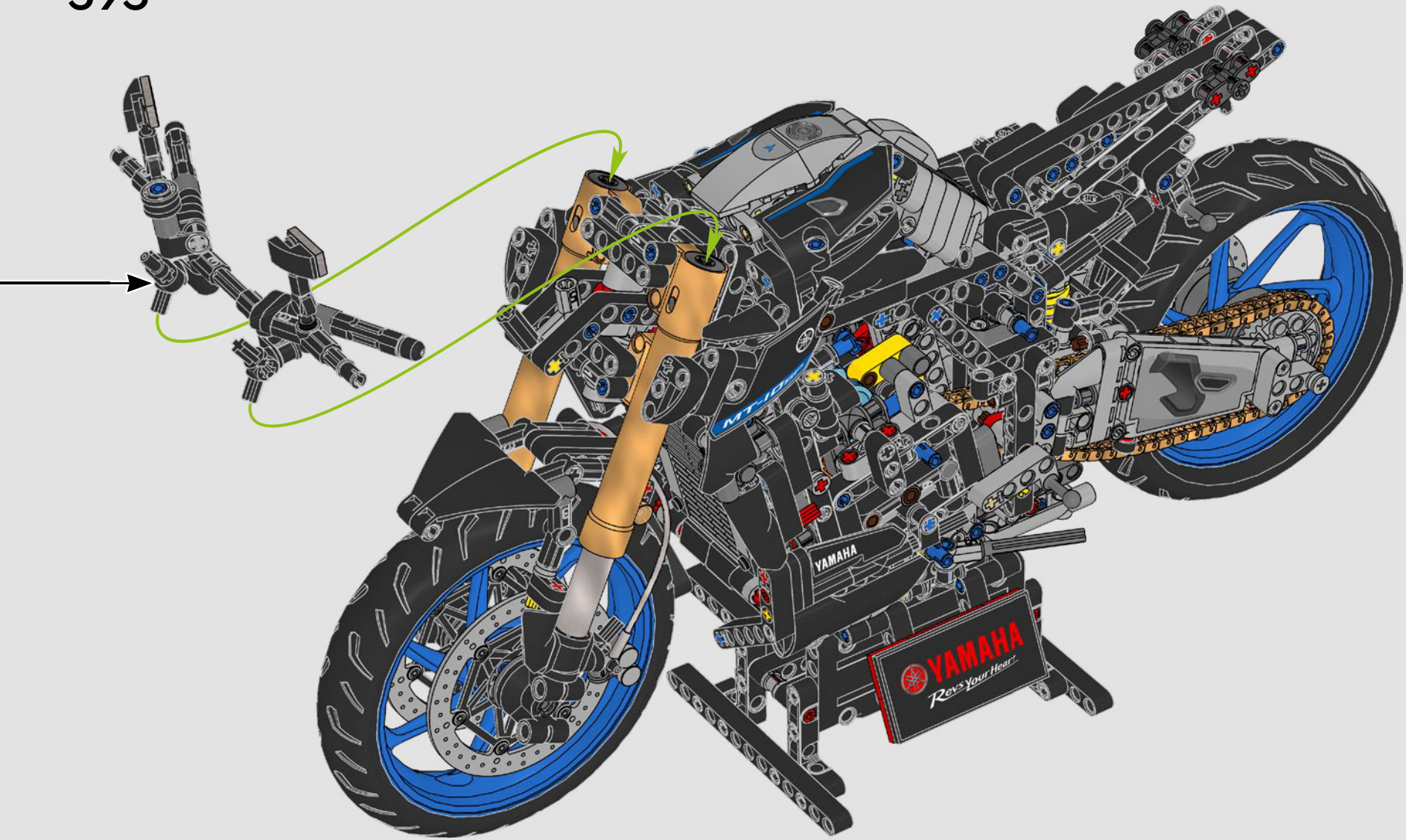

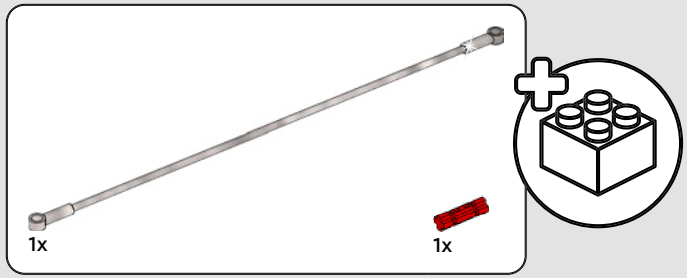

396

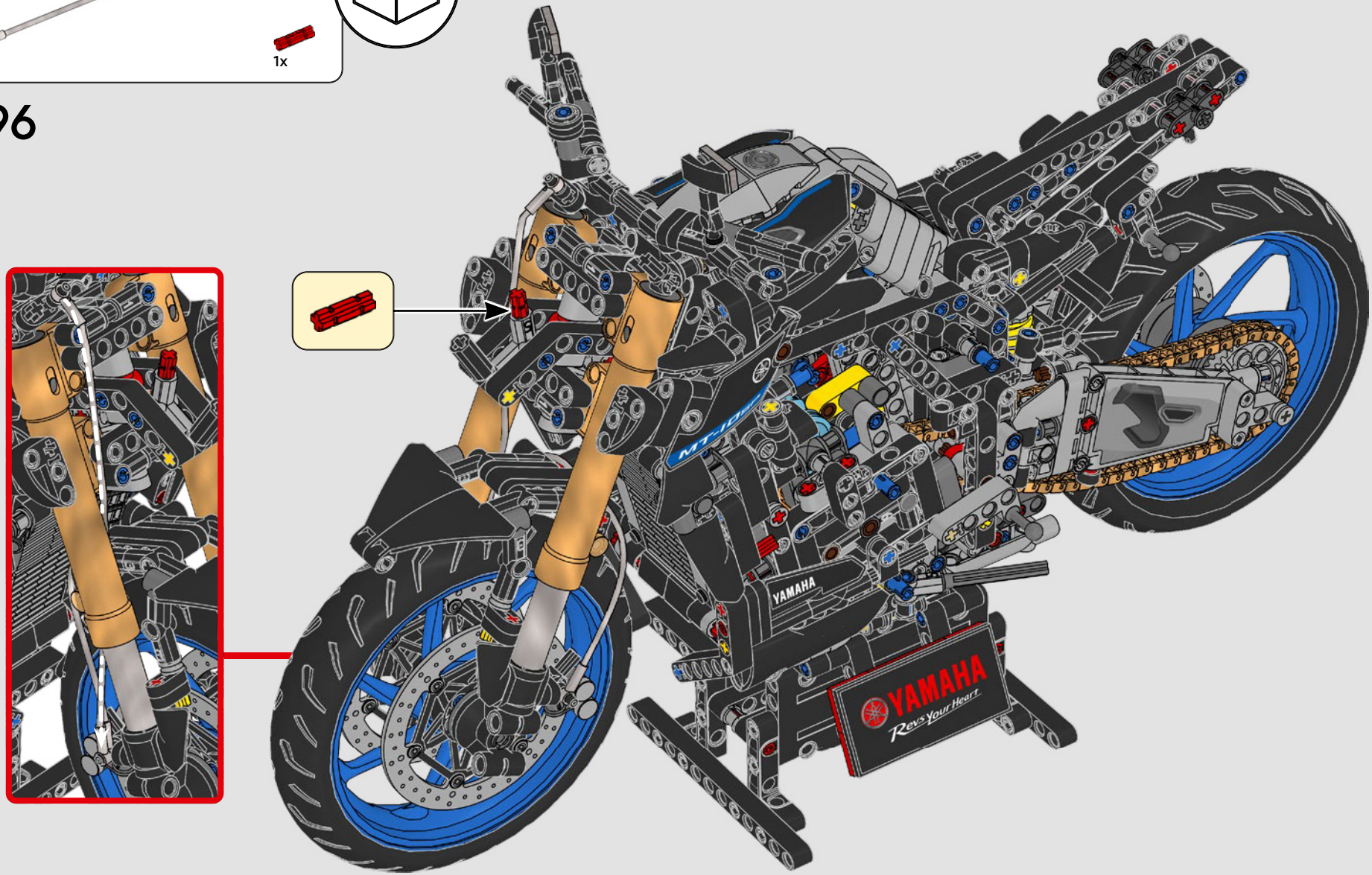

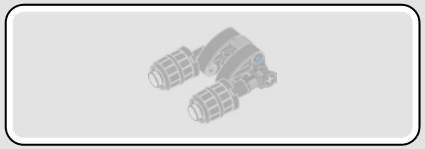

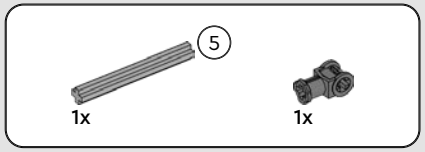

397

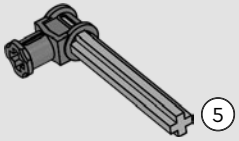

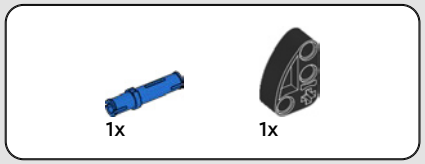

398

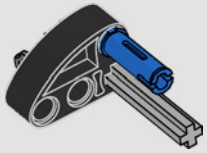

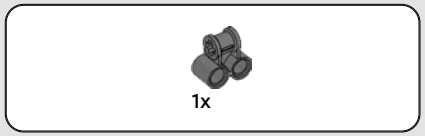

399

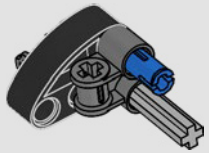

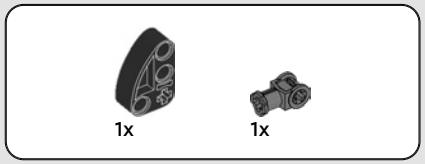

400

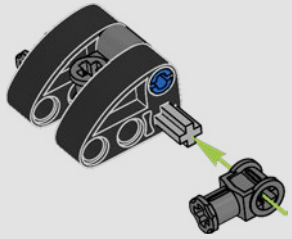

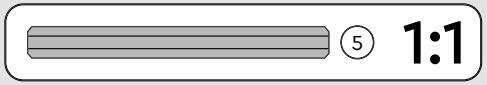

401

1:1

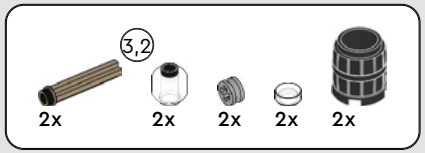

402

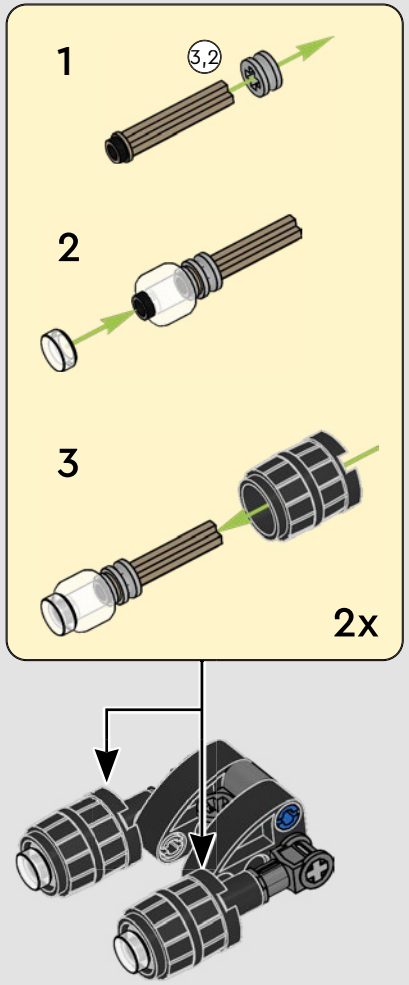

403

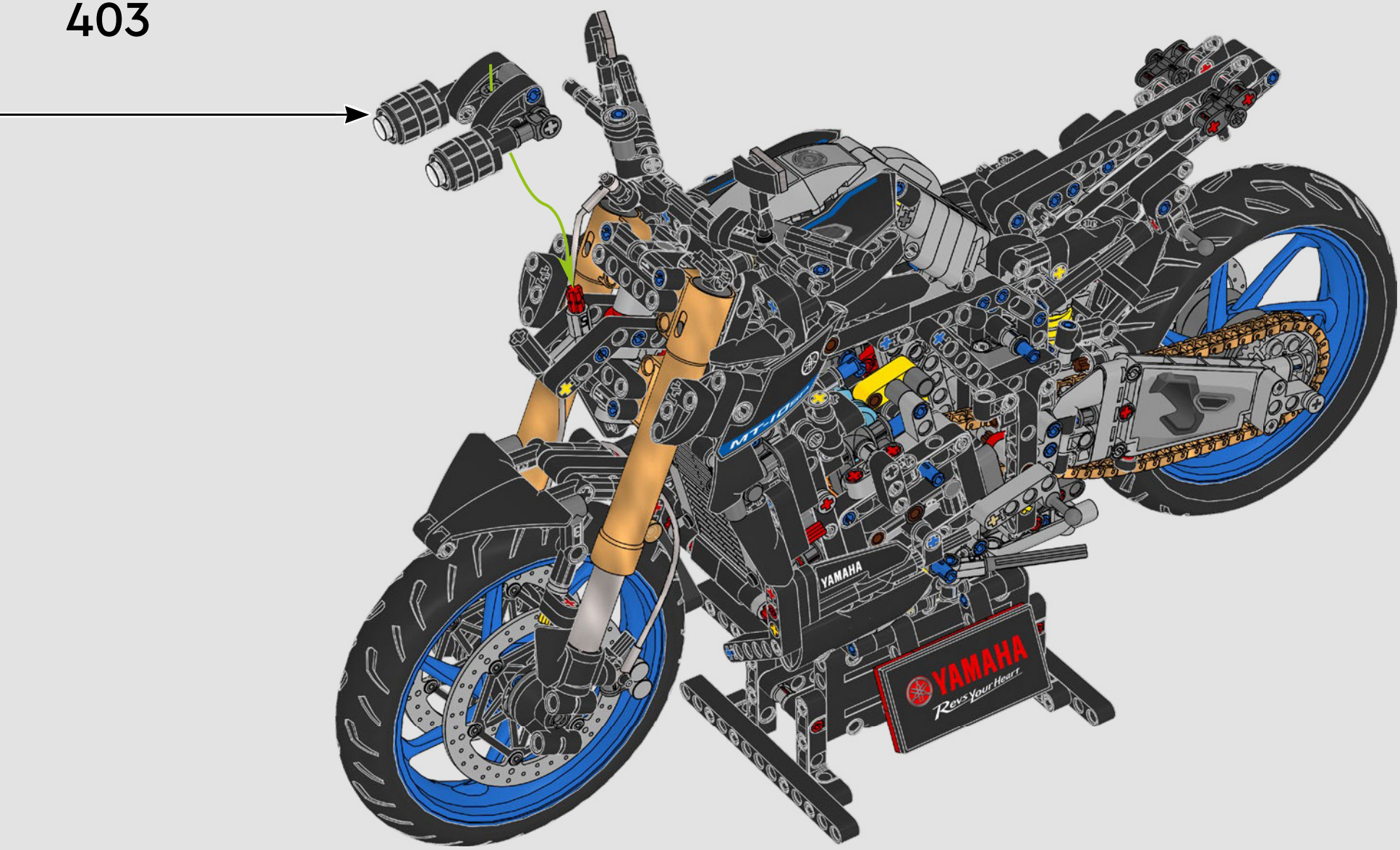

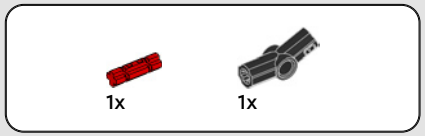

404

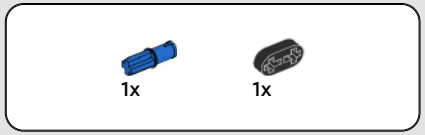

405

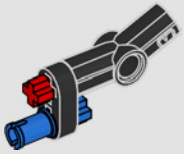

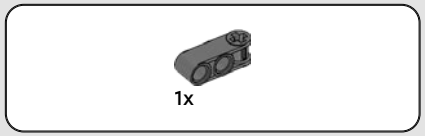

406

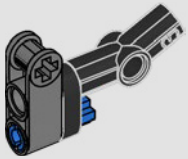

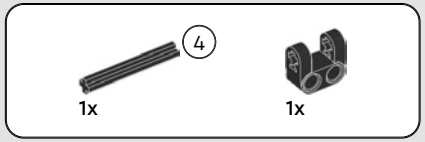

407

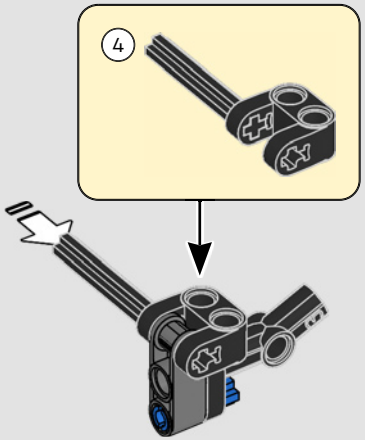

408

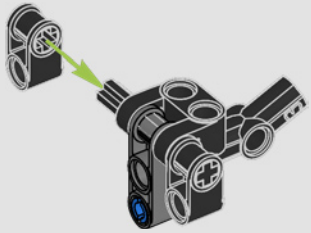

409

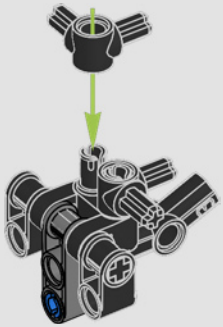

410

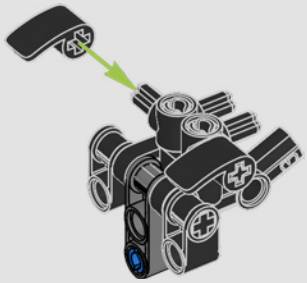

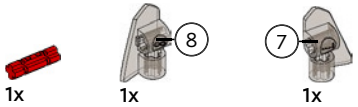

411

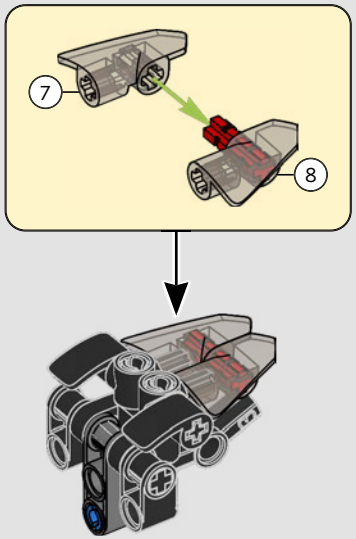

2x

412

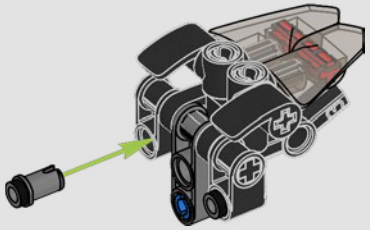

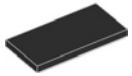

1x

413

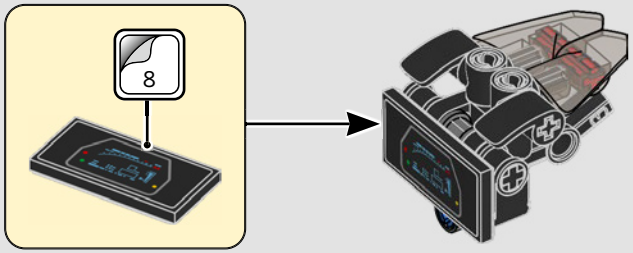

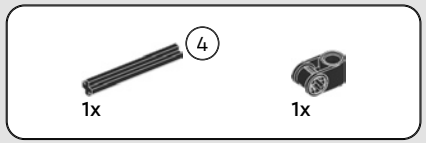

414

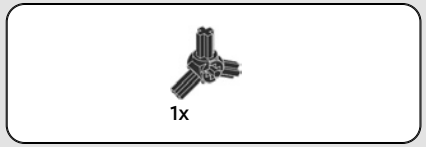

415

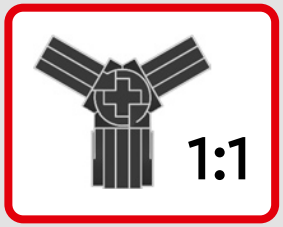

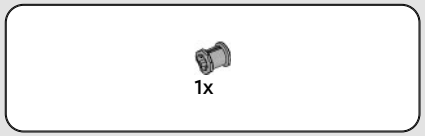

416

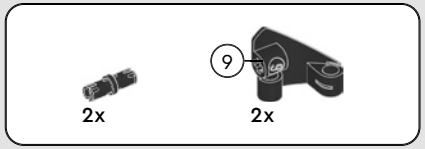

417

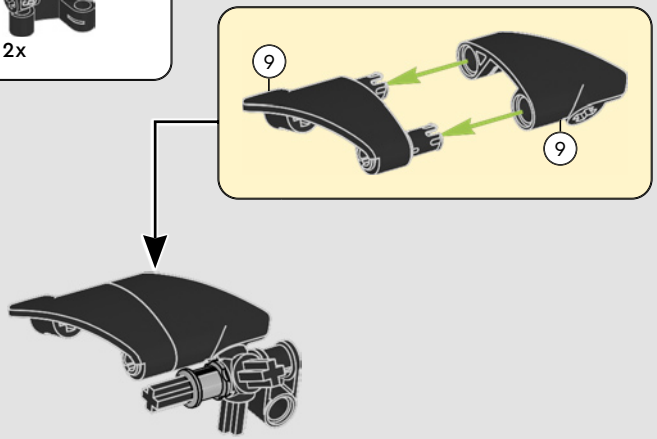

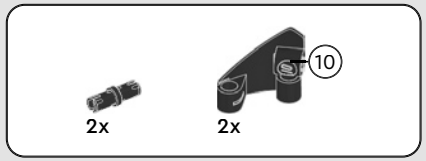

418

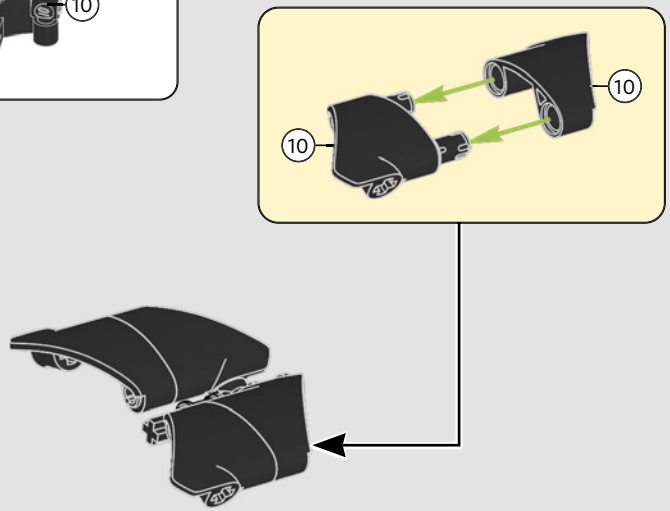

419

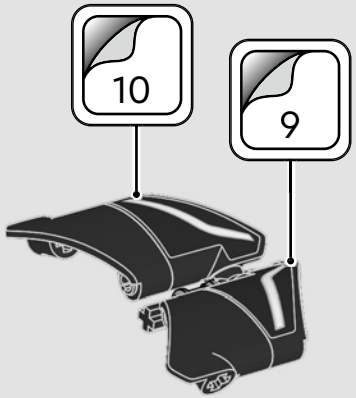

420

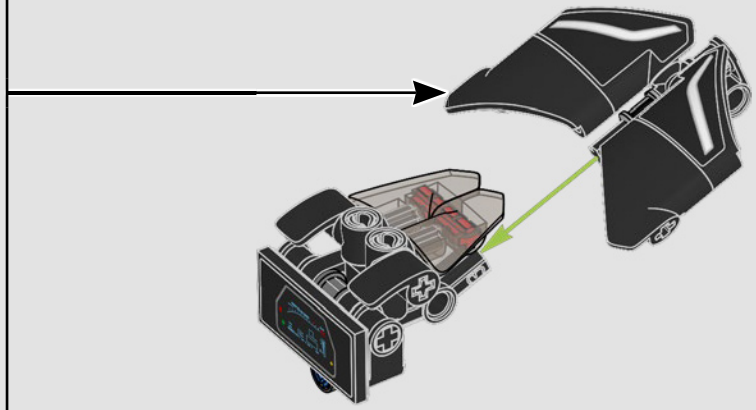

421

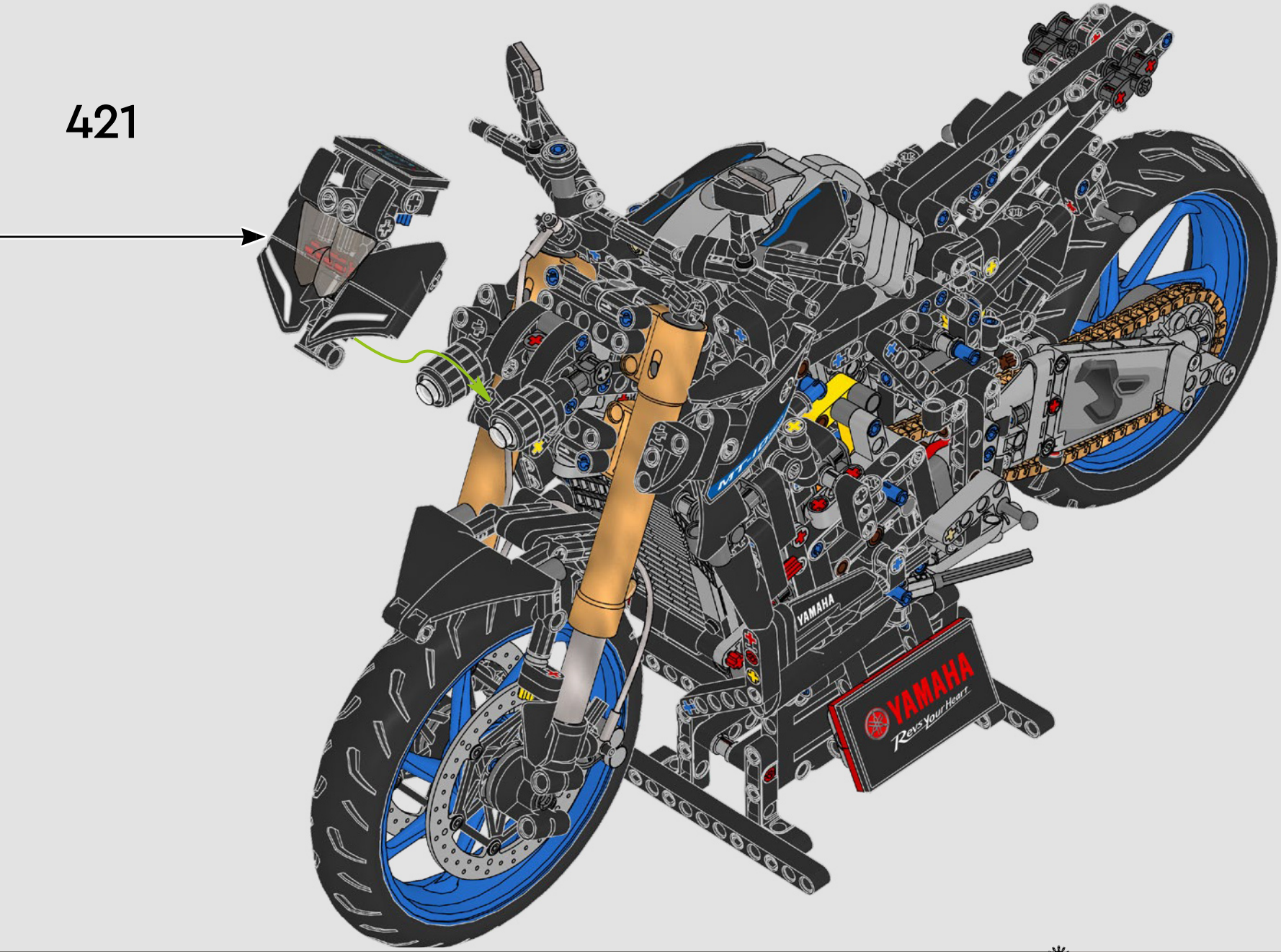

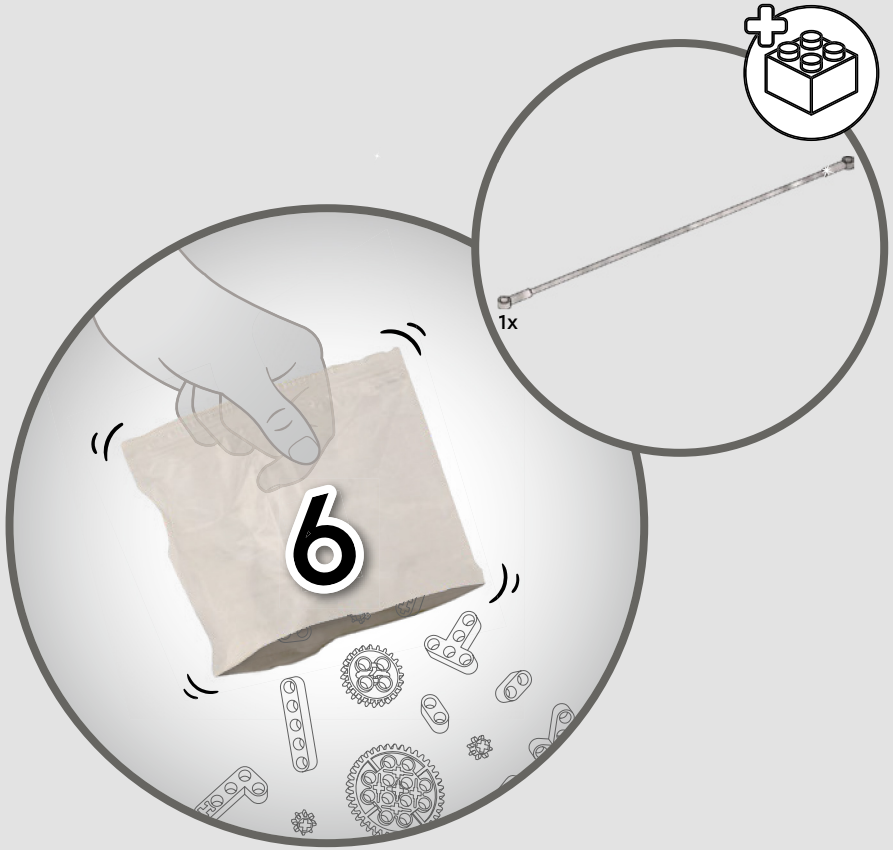

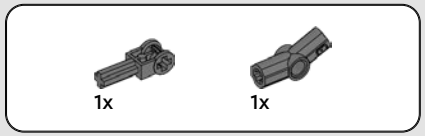

422

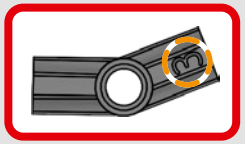

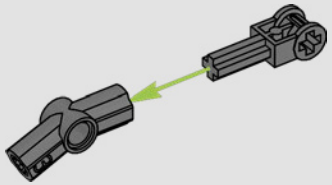

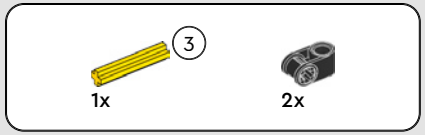

423

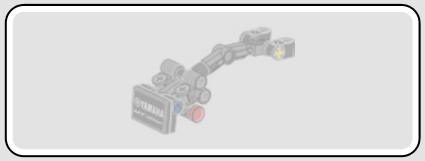

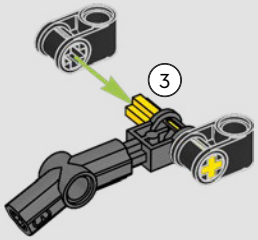

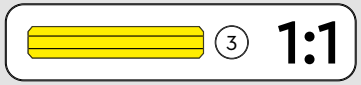

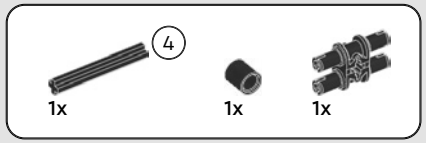

424

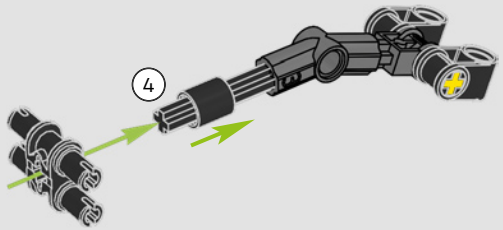

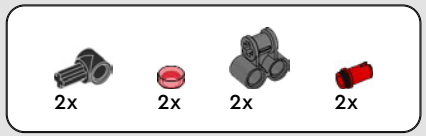

425

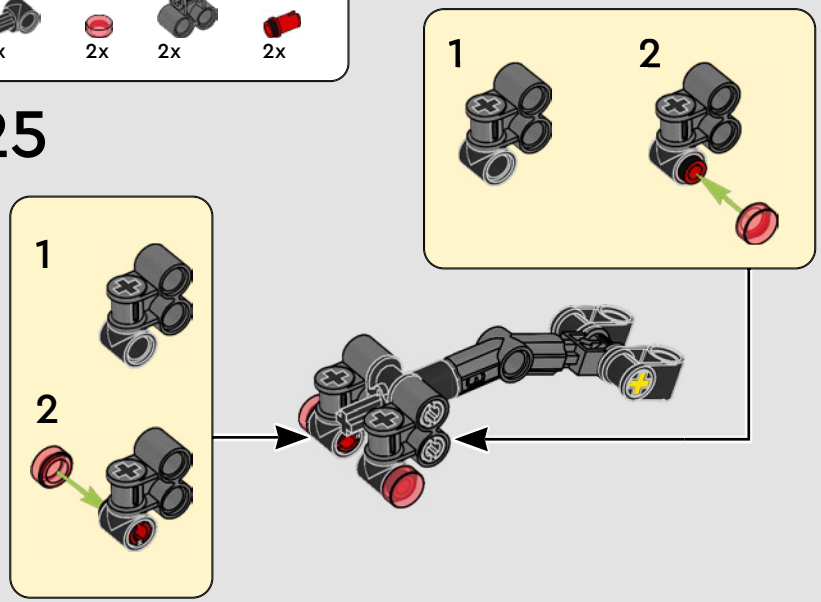

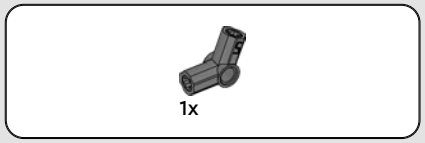

426

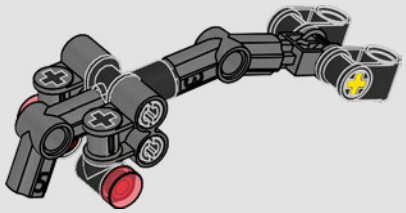

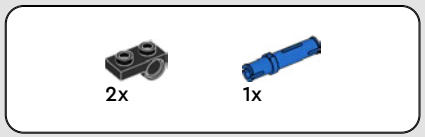

427

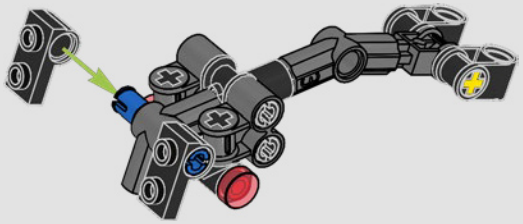

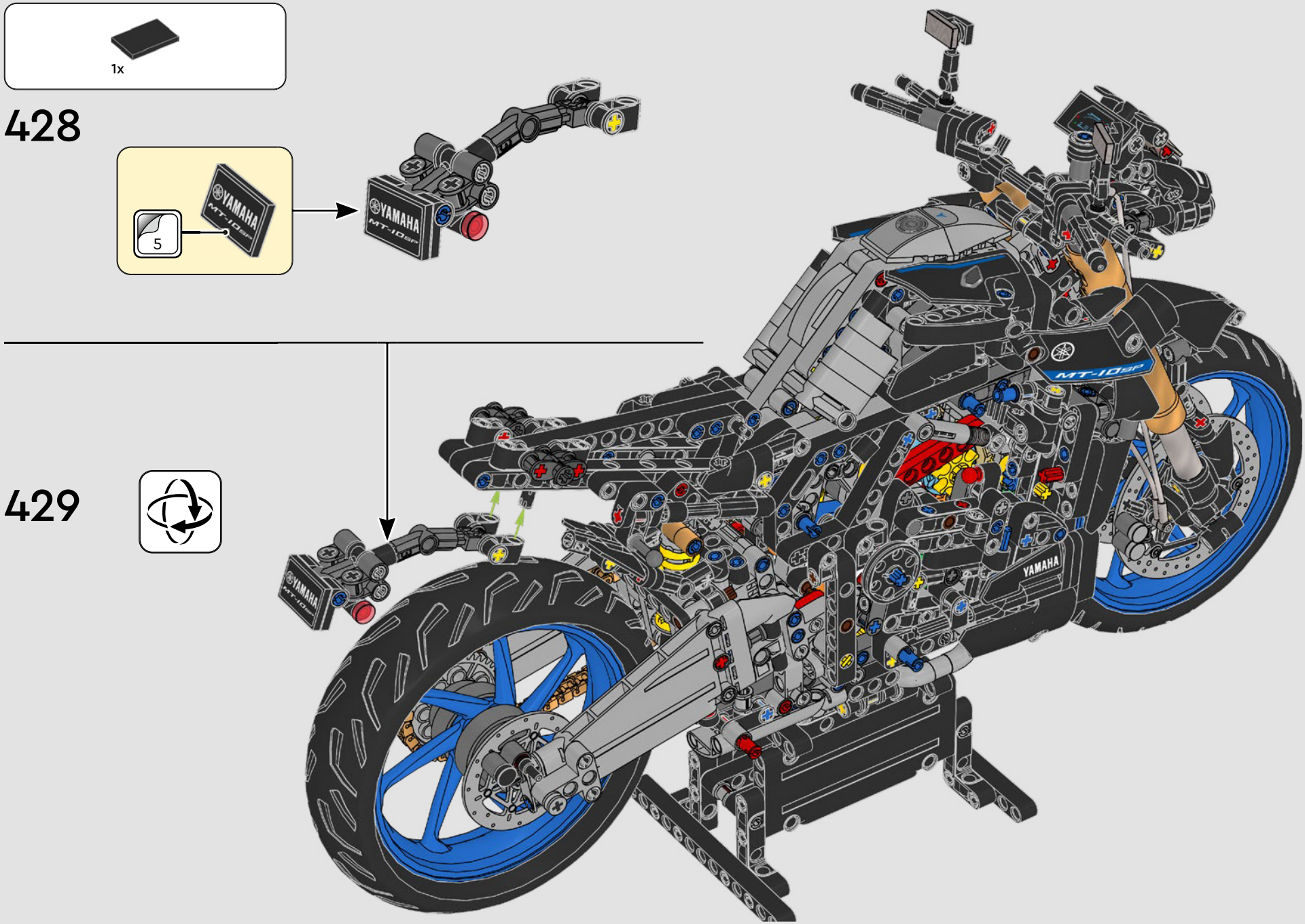
1x
428
5
YAMAHA
MT-10SP
429
YAMAHA
MT-10SP

2x

430

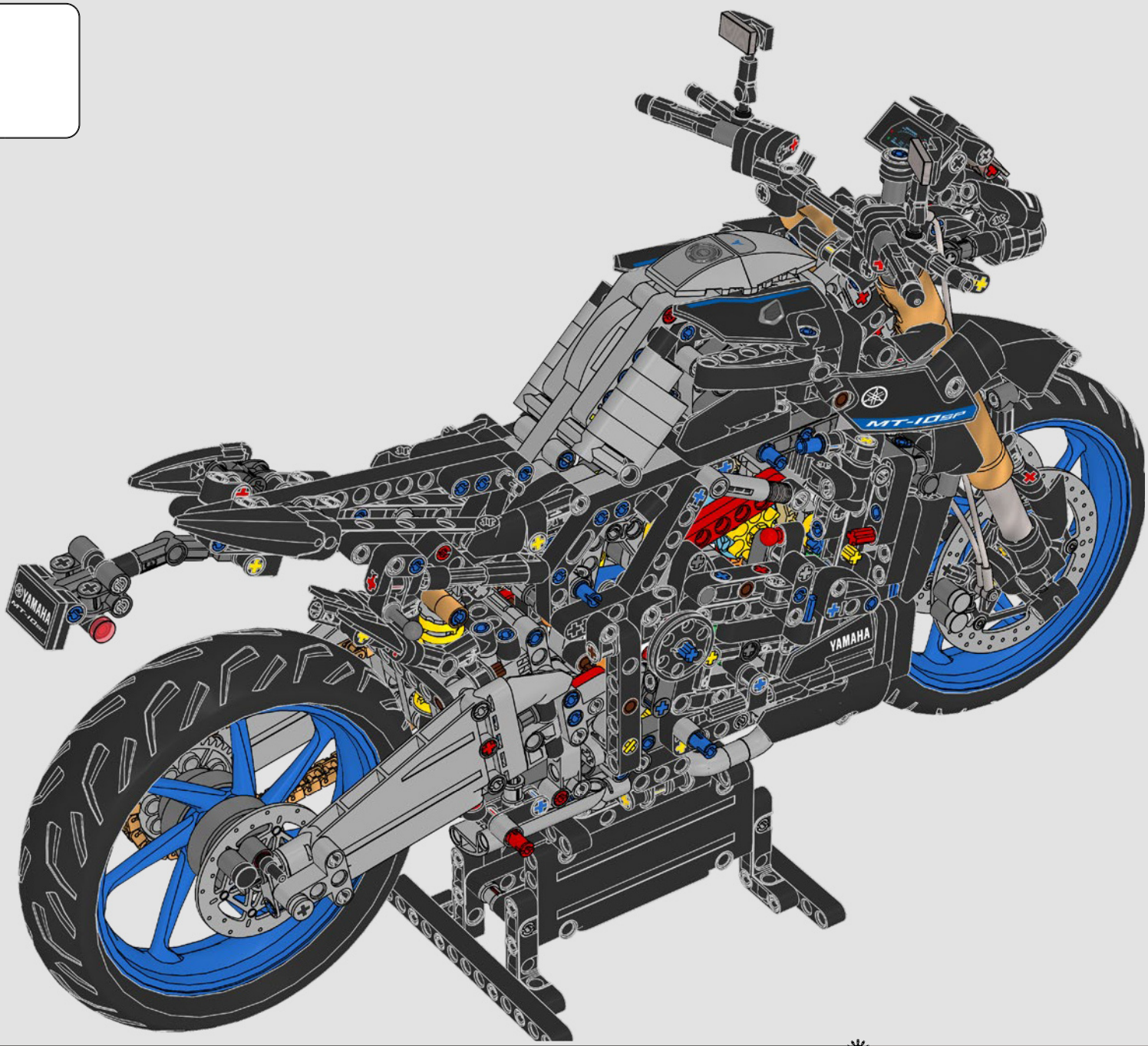

2x

431

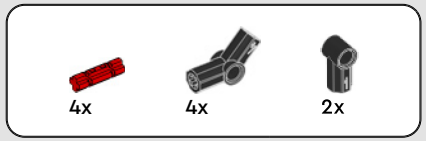

432

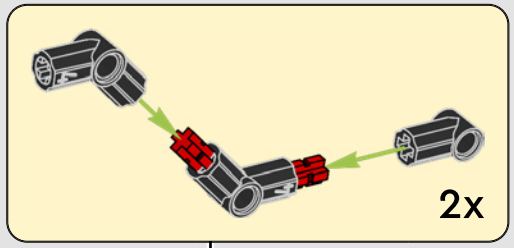

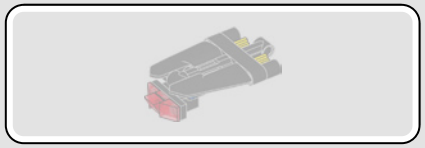

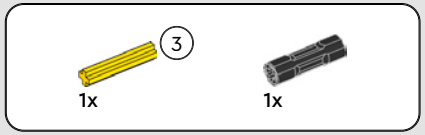

433

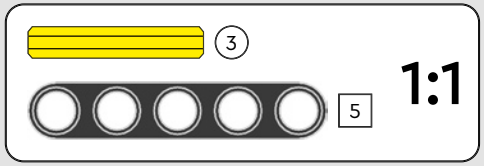

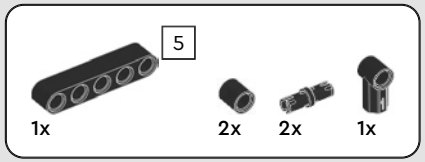

434

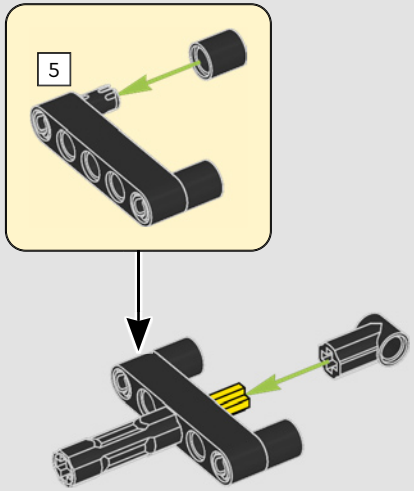

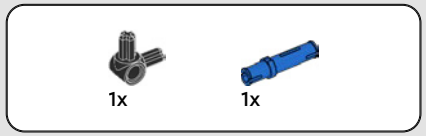

435

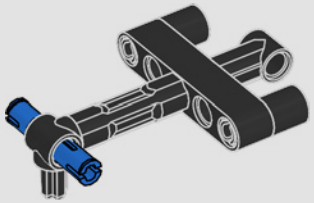

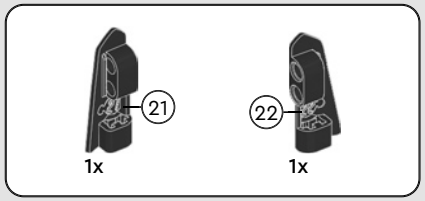

436

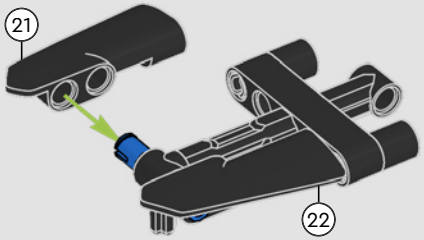

437

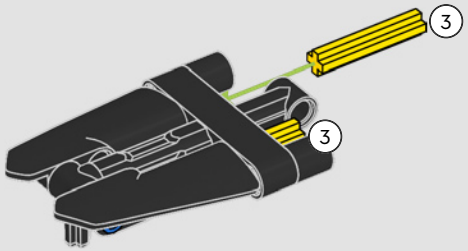

1:1

438

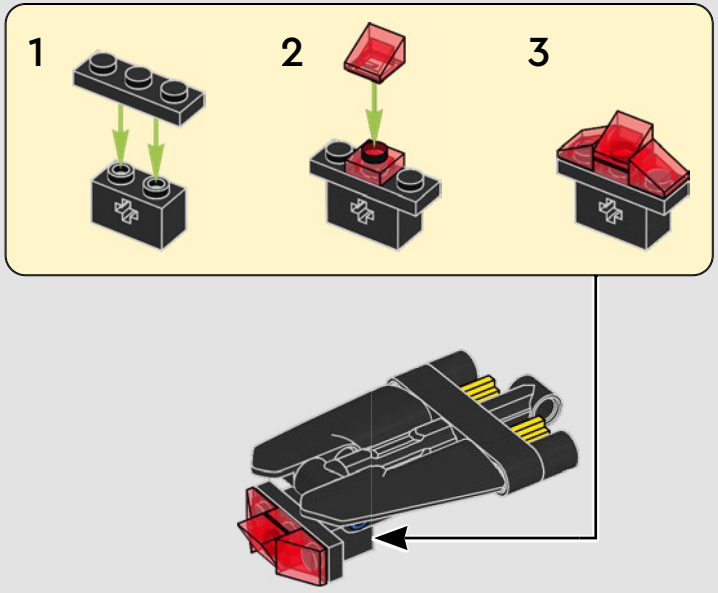

439

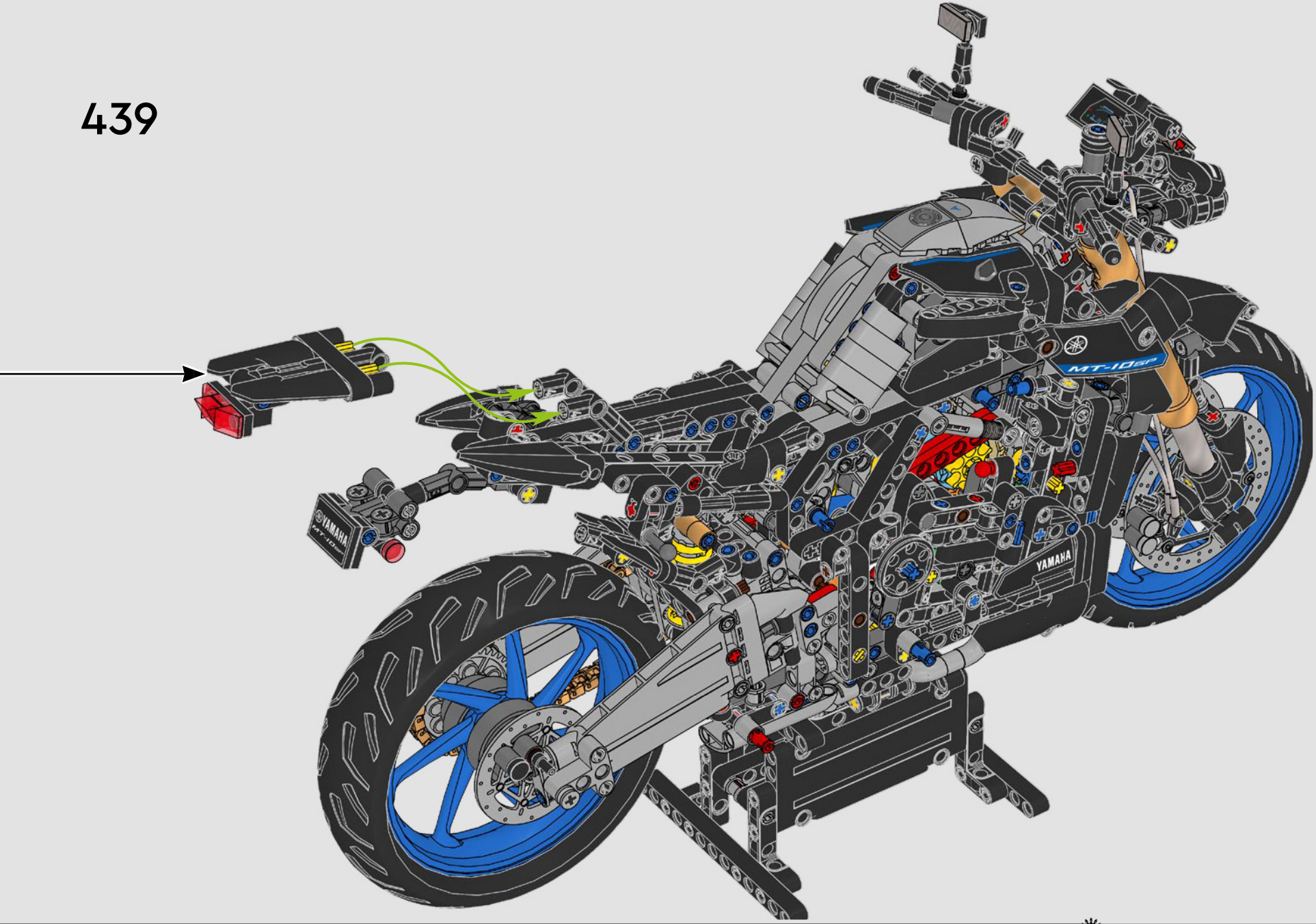

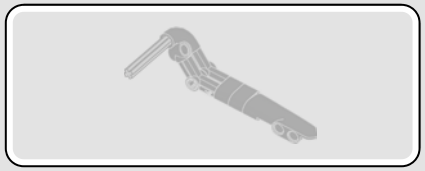

440

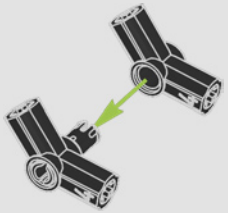

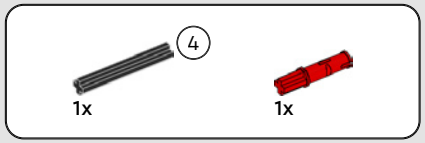

441

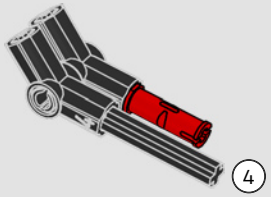

2x

442

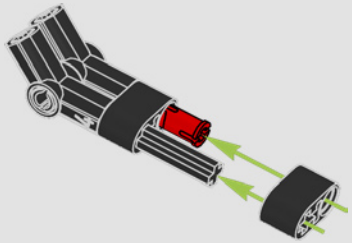

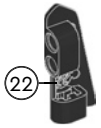

1x

443

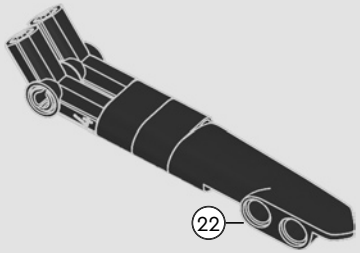

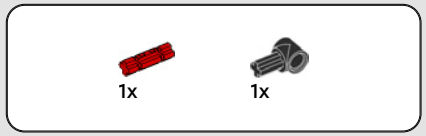

444

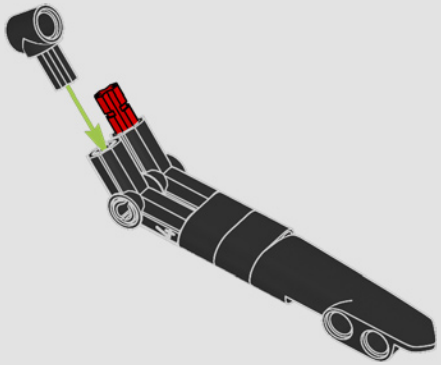

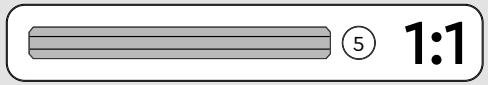

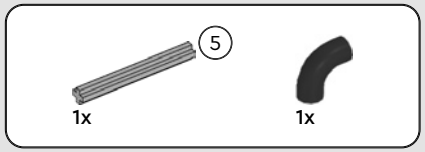

445

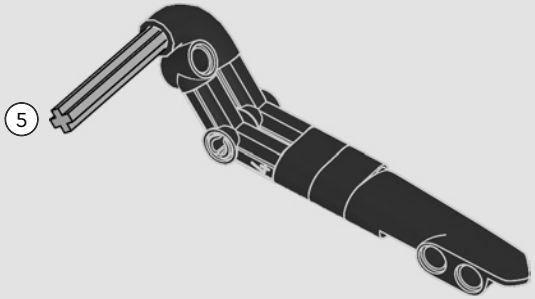

446

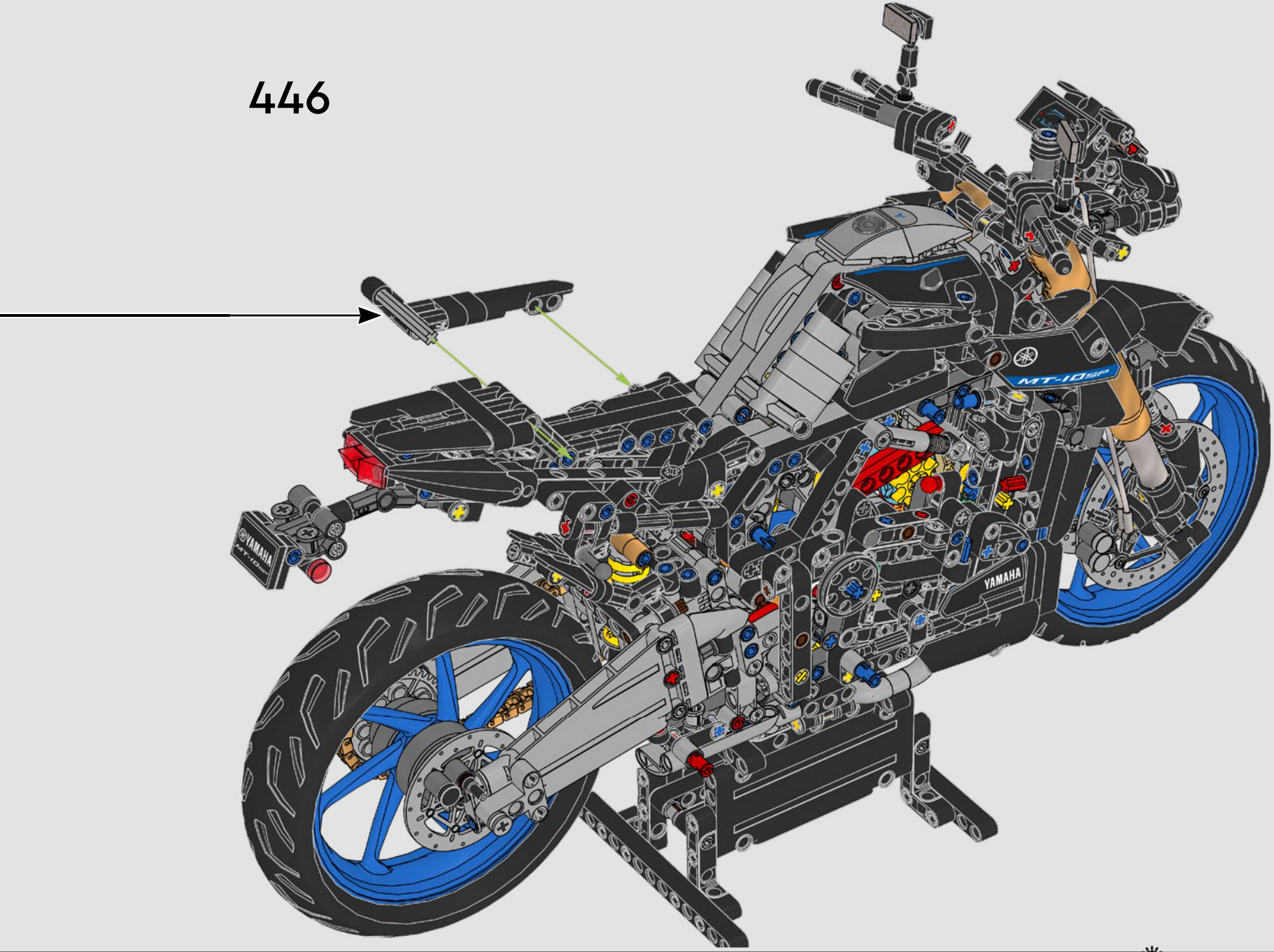

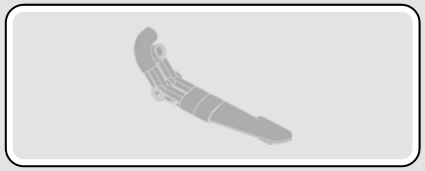

447

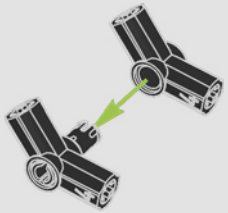

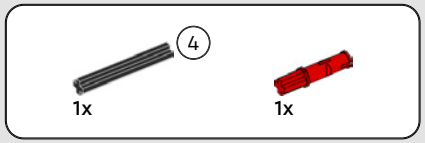

448

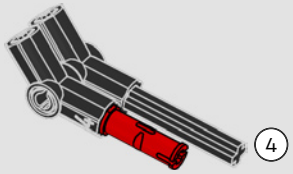

2x

449

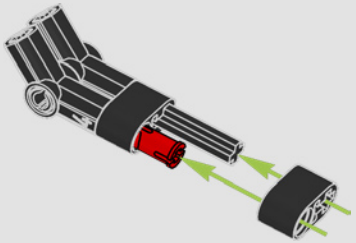

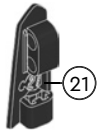

1x

450

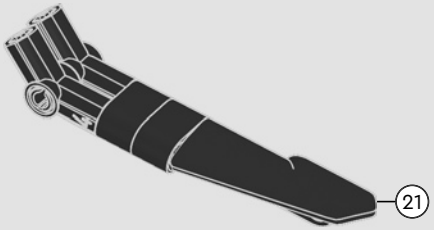

451

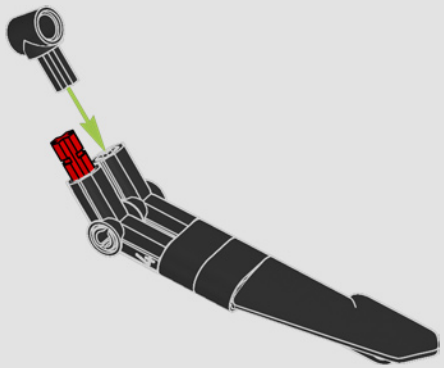

452

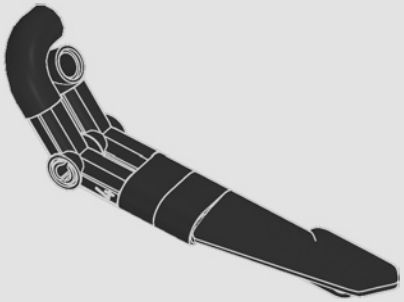

453

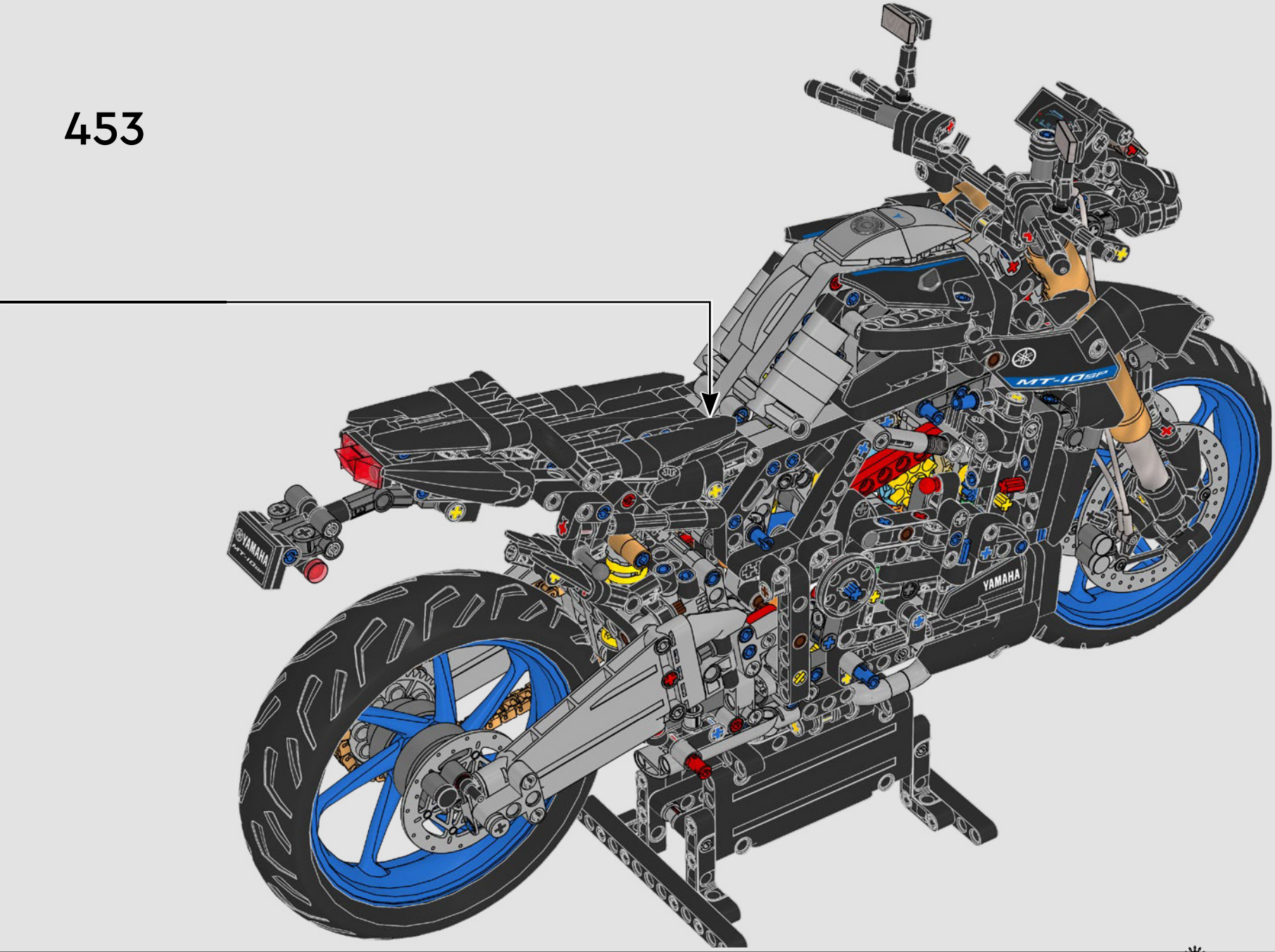

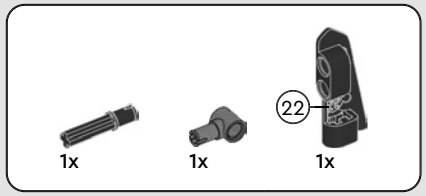

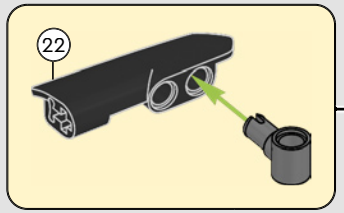

454

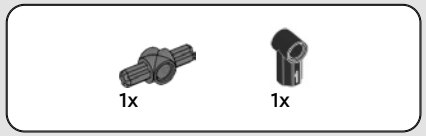

455

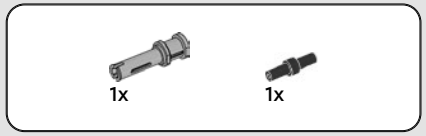

456

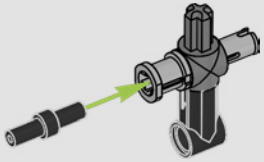

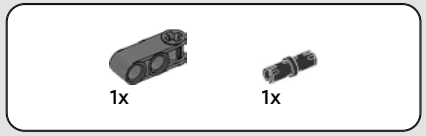

457

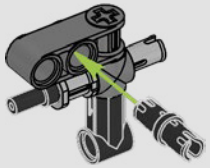

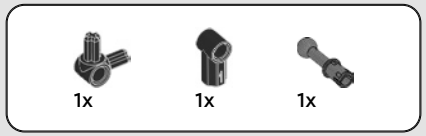

458

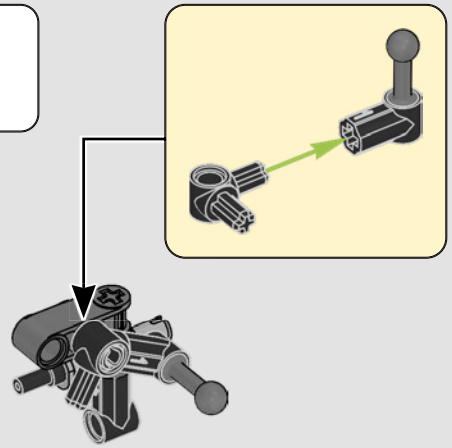

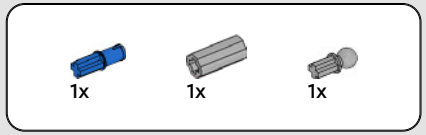

459

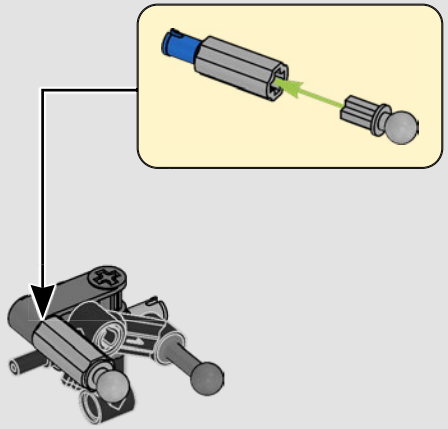

460

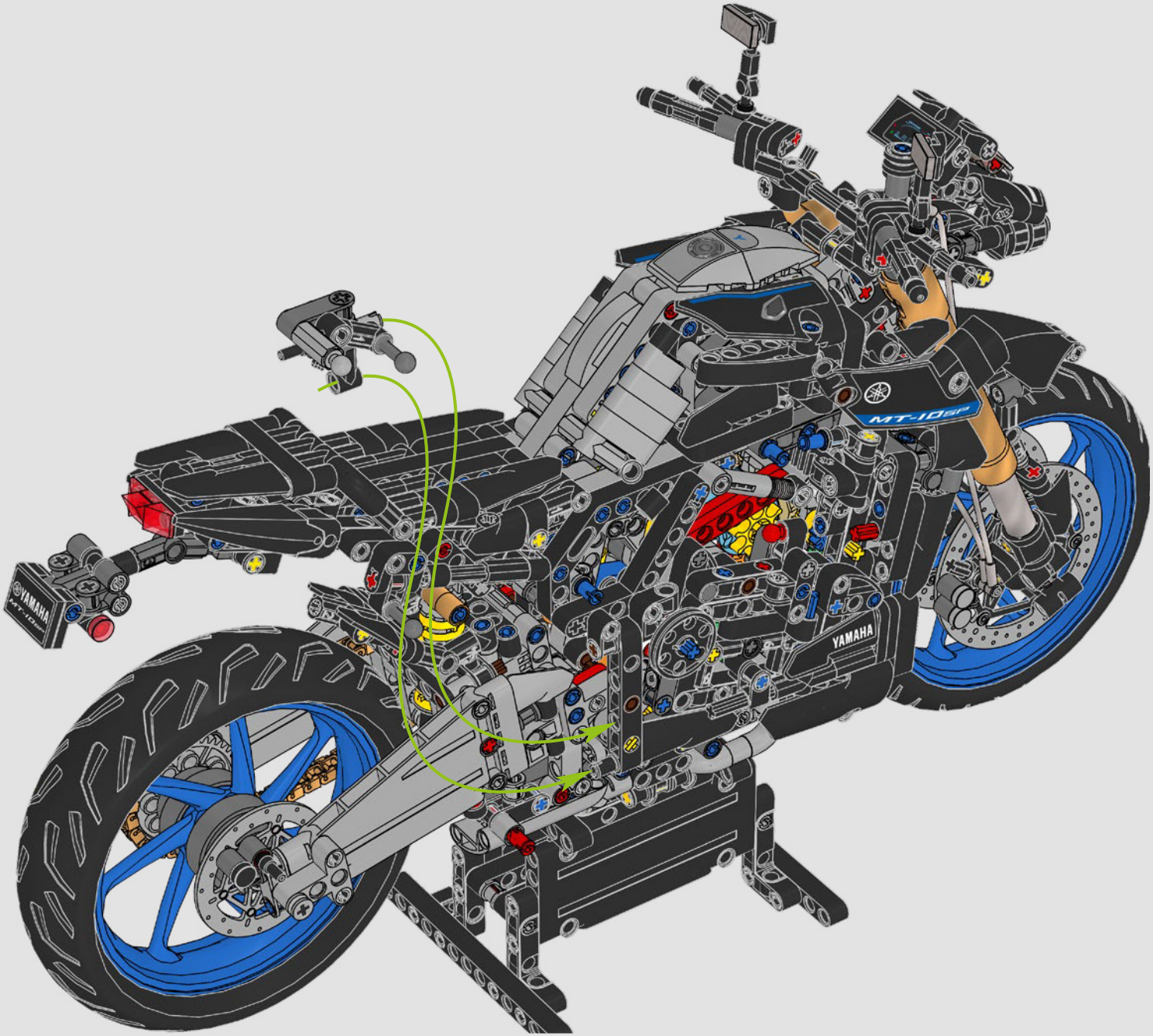

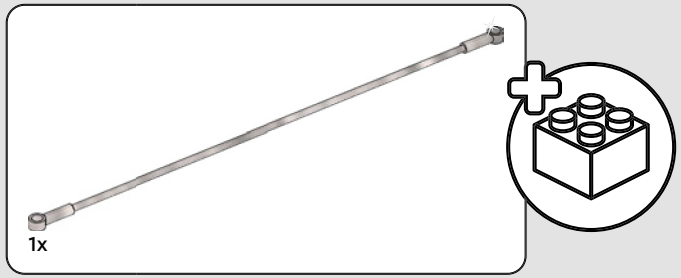

461

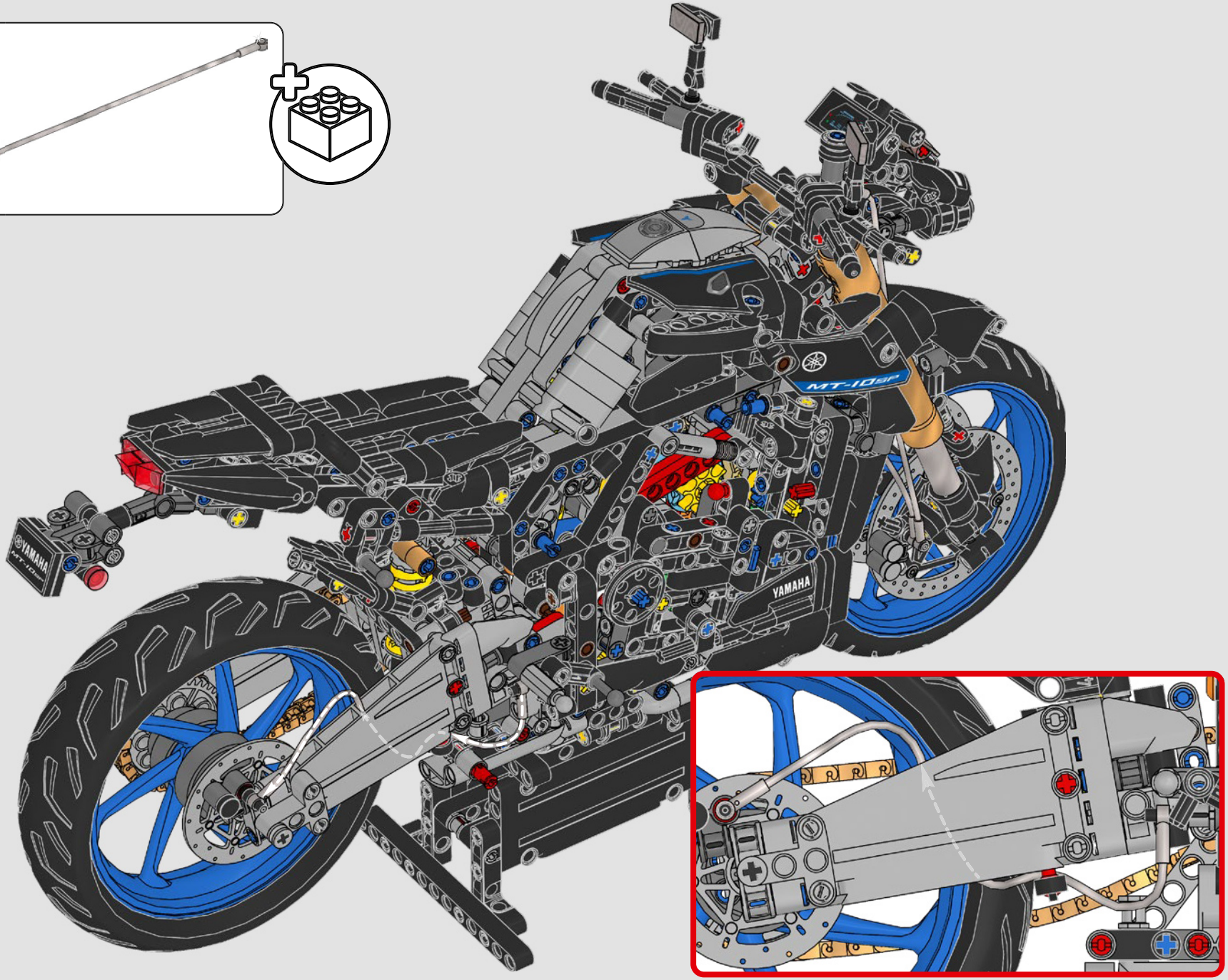

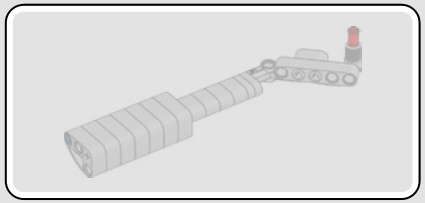

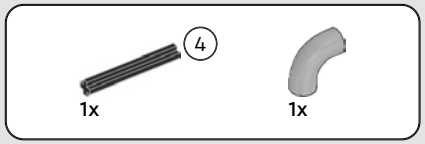

462

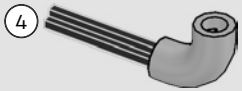

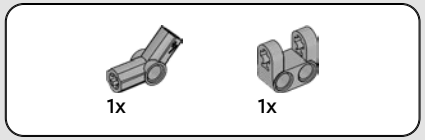

463

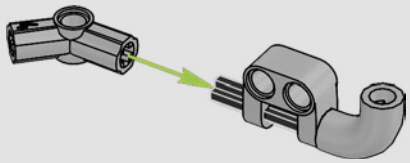

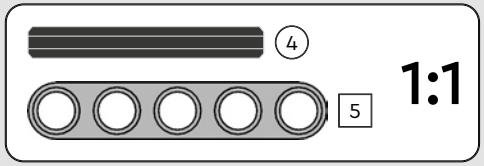

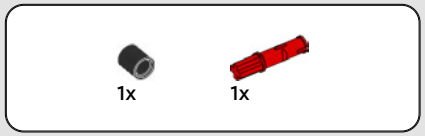

464

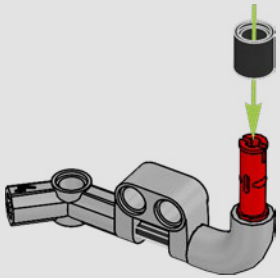

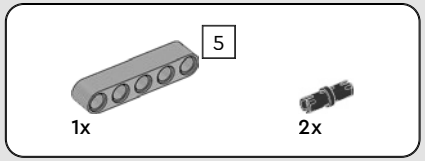

465

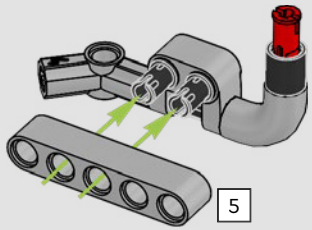

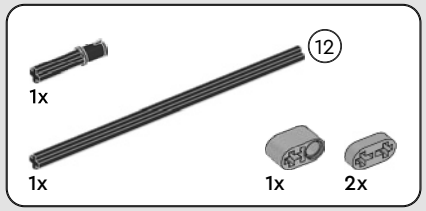

466

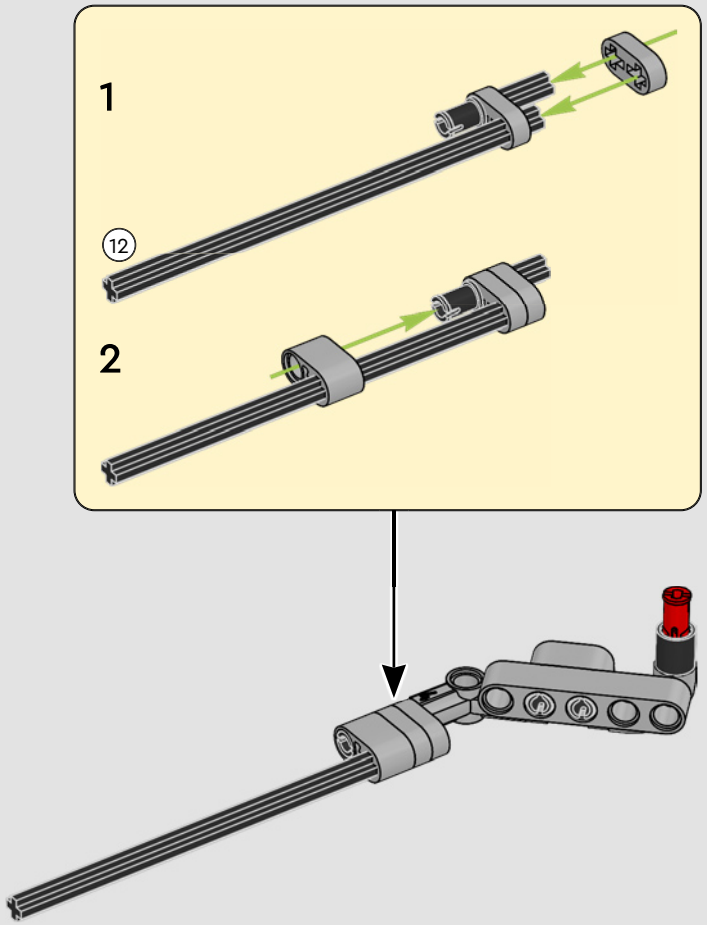

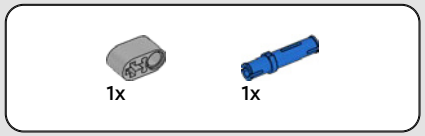

467

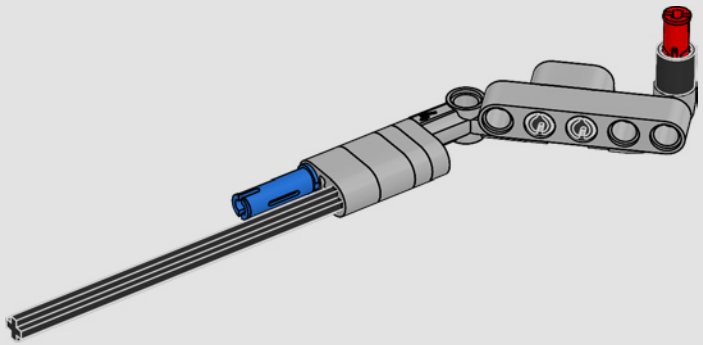

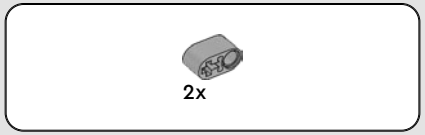

468

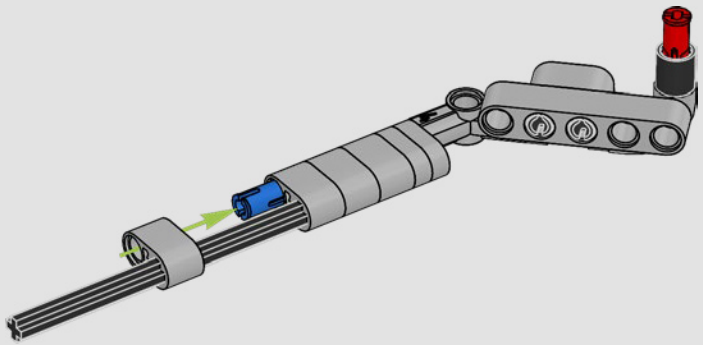

469

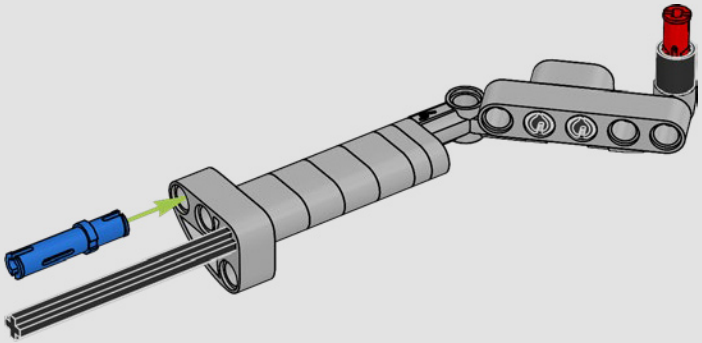

470

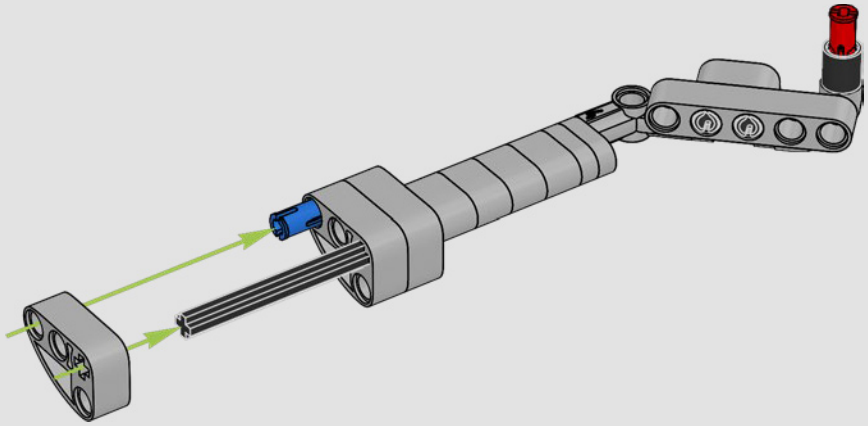

1x

471

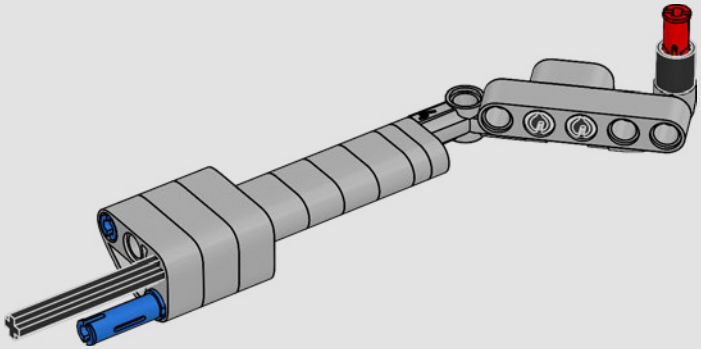

2x

472

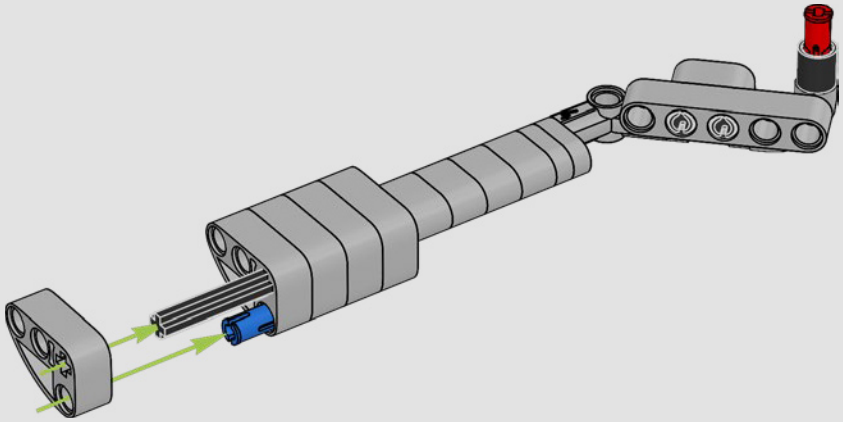

1x

473

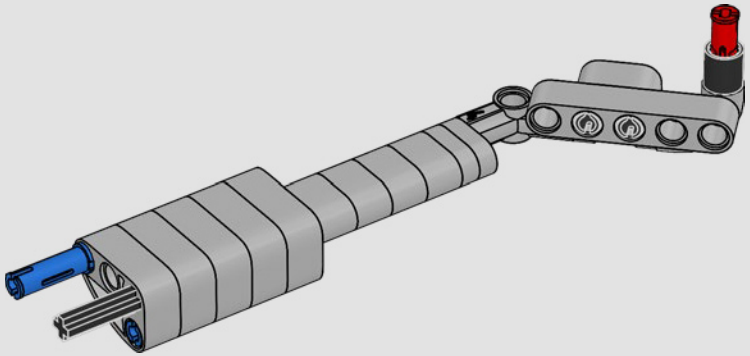

2x

474

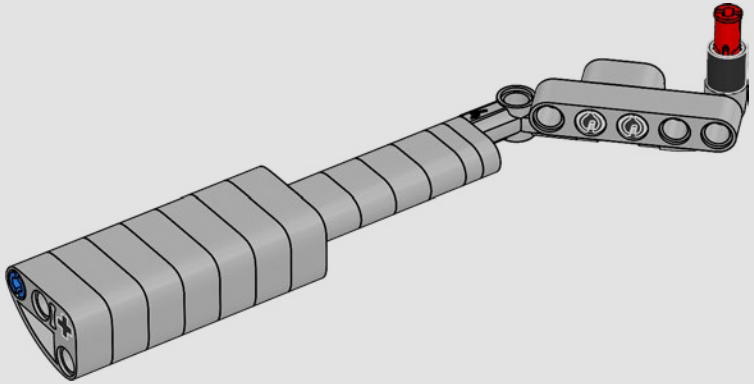

475

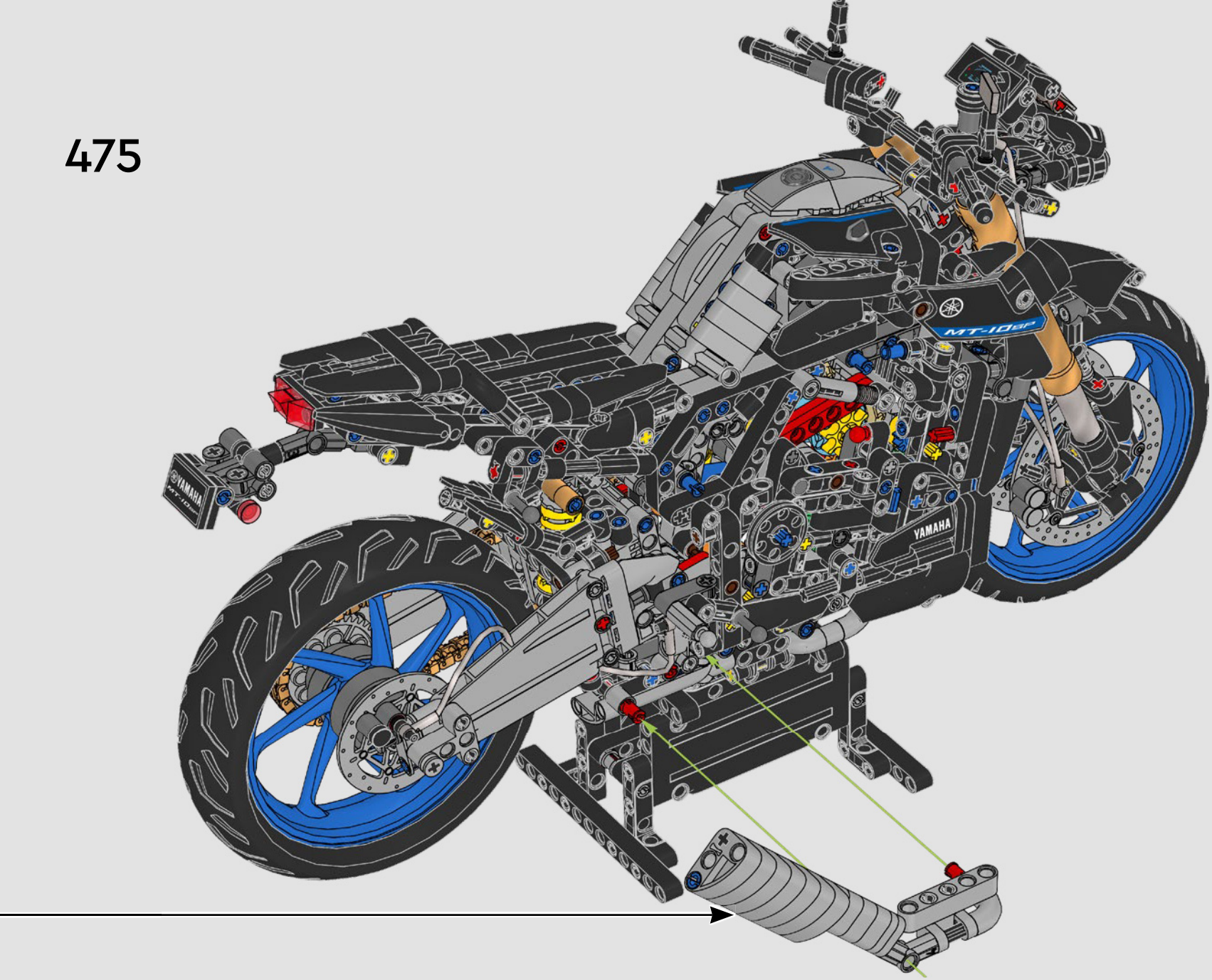

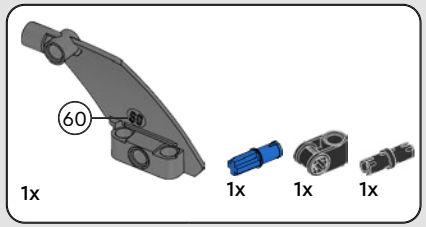

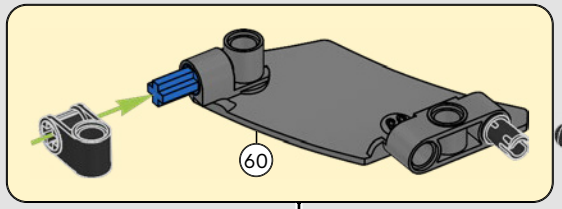

476

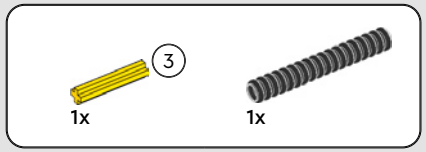

477

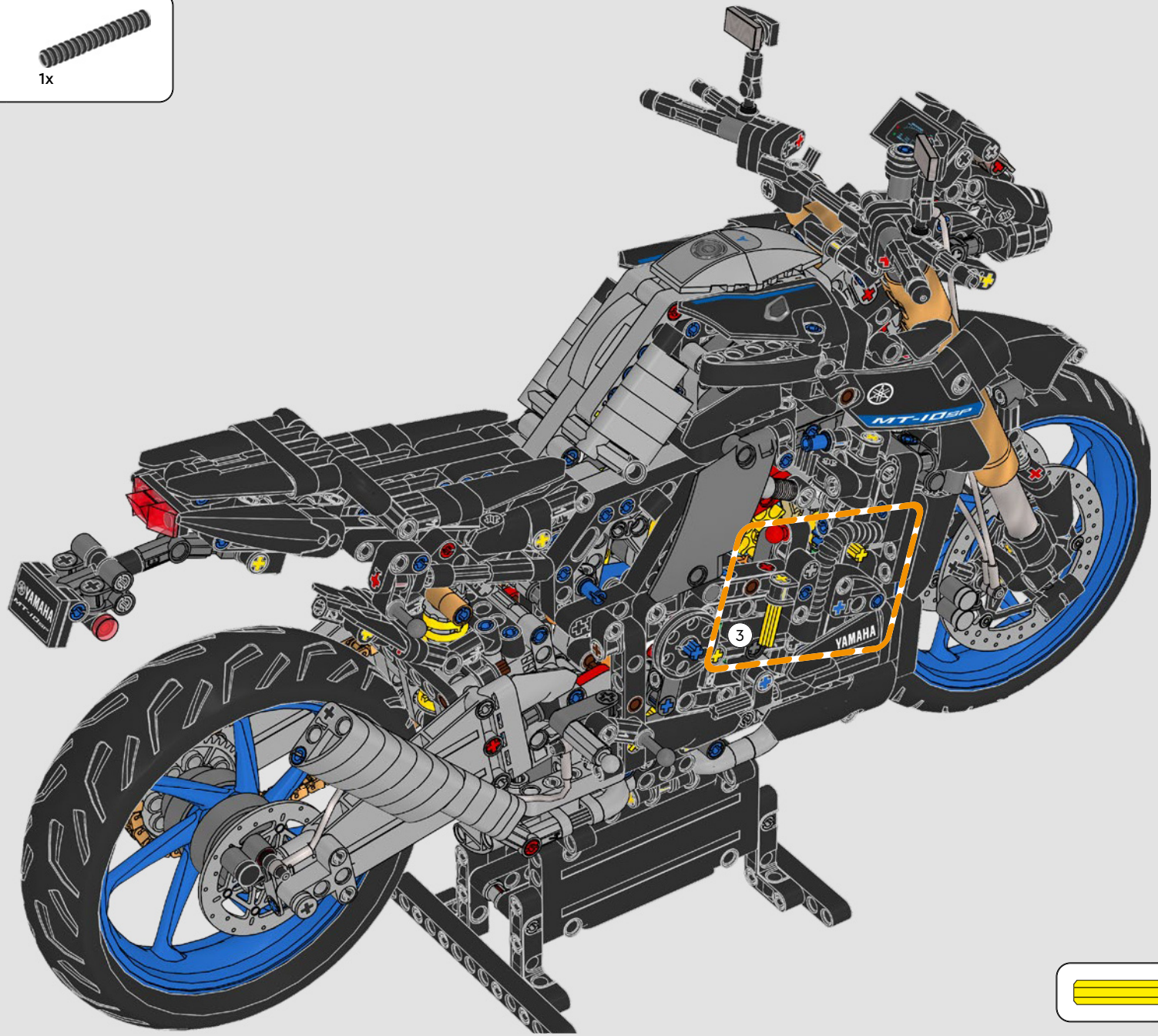

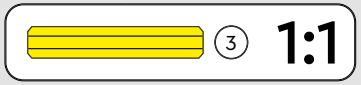

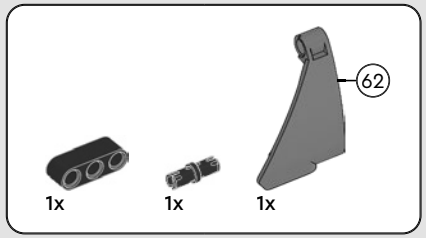

478

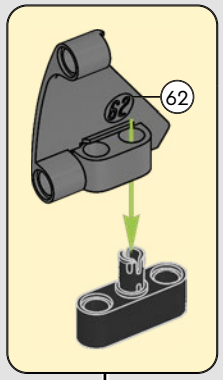

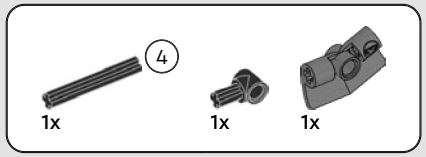

479

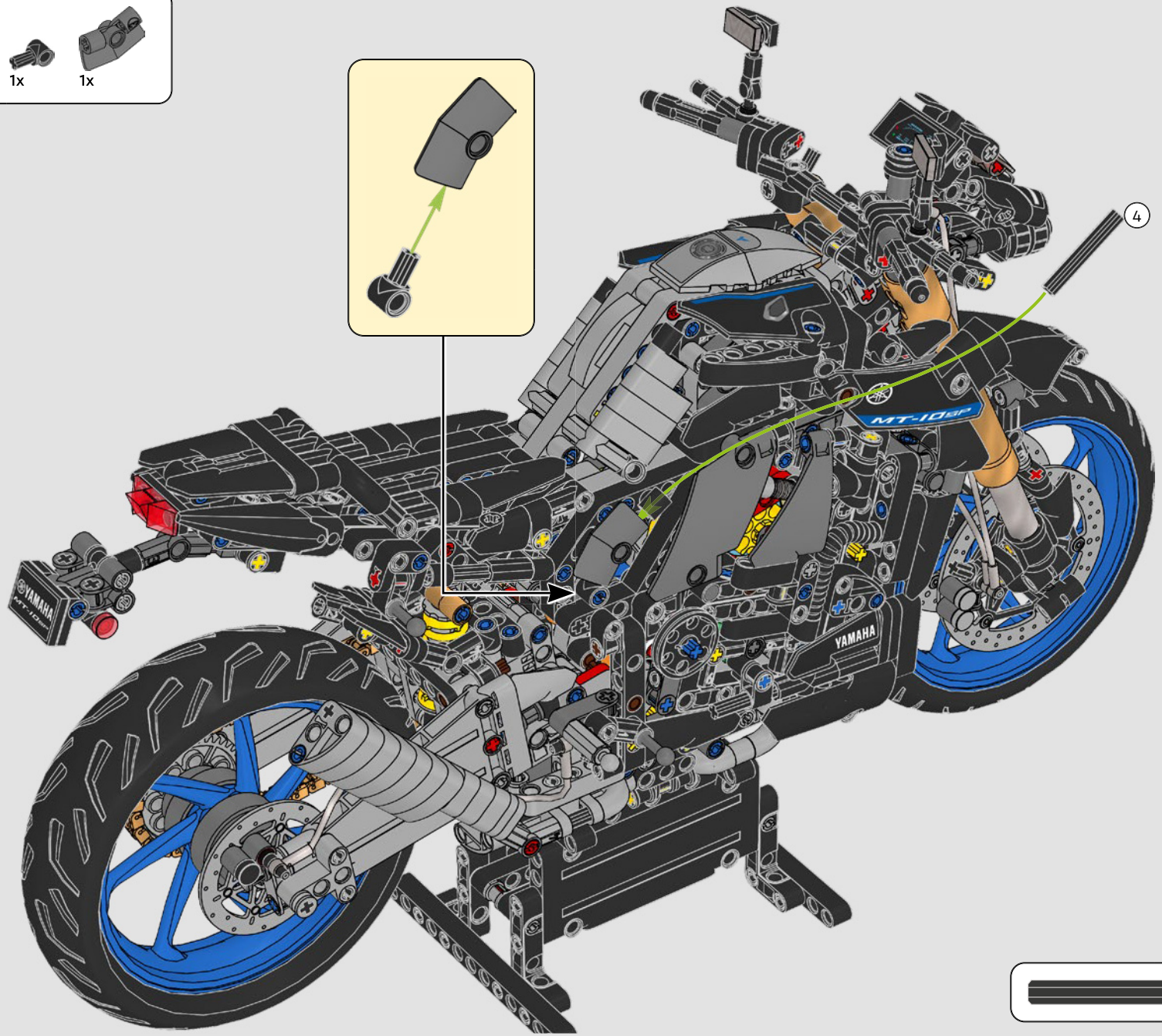

4 1:1

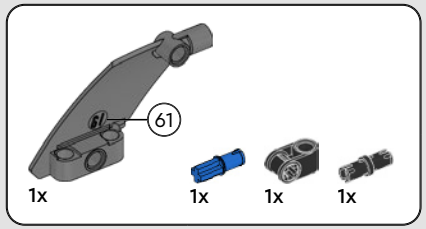

480

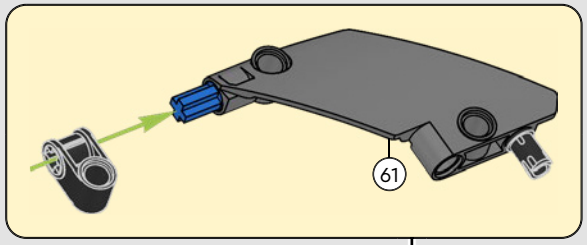

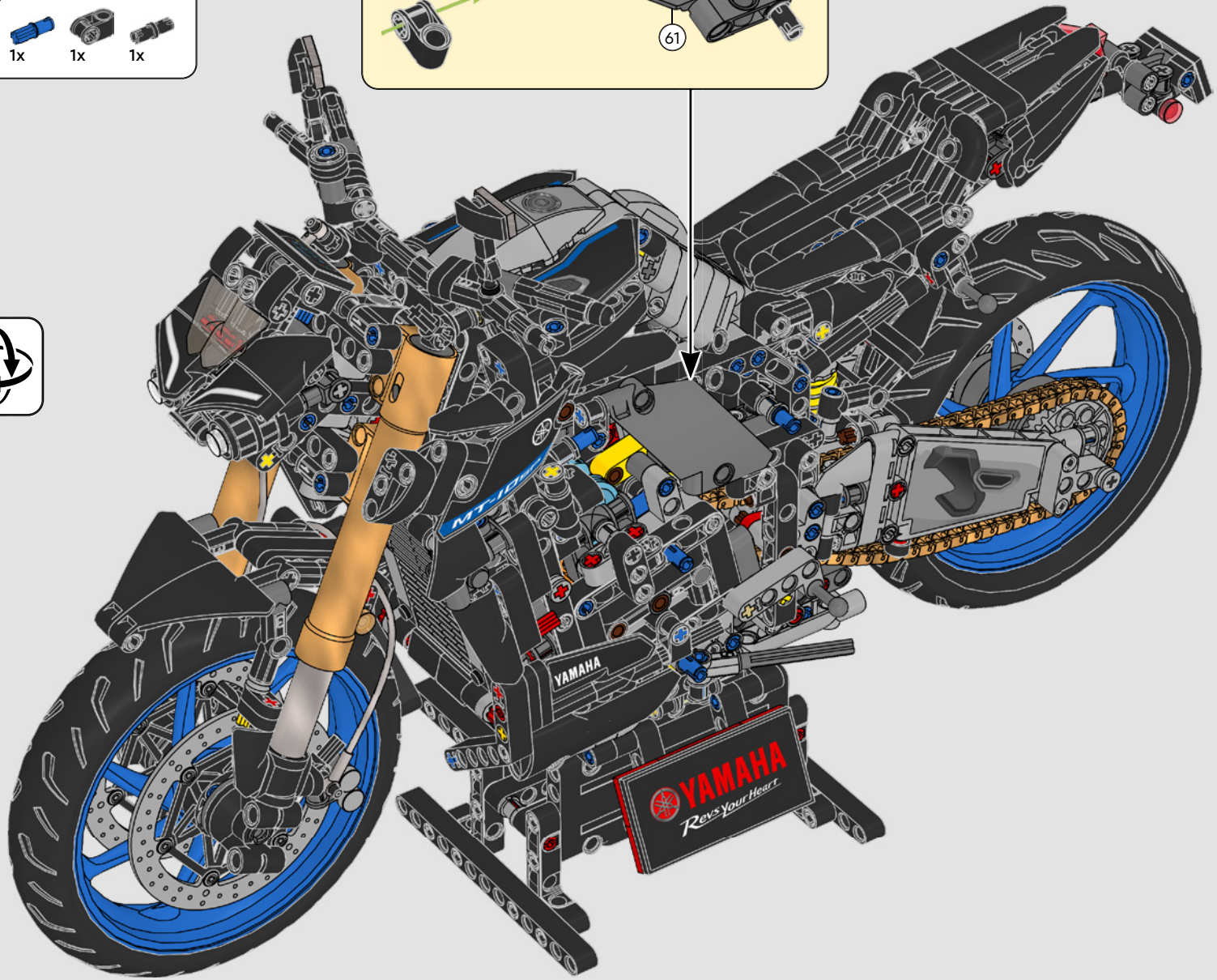

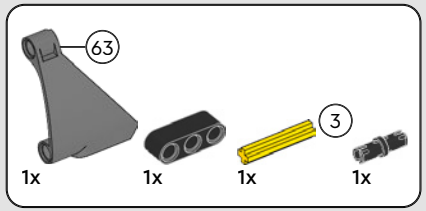

481

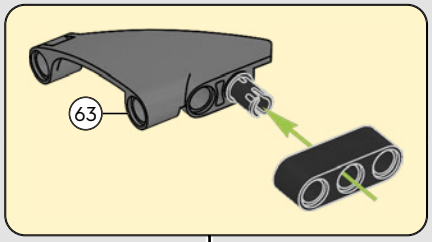

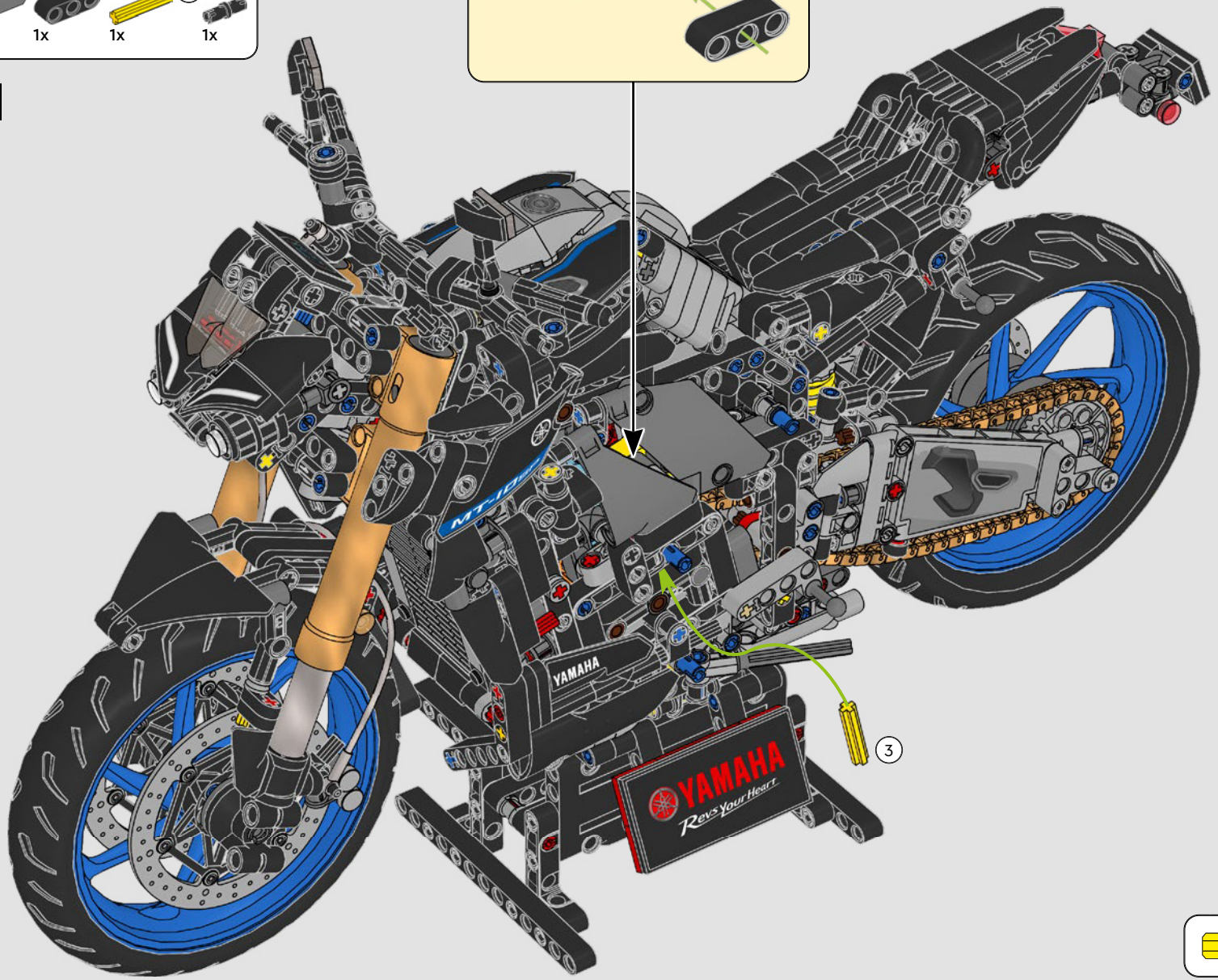

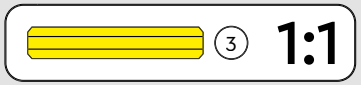

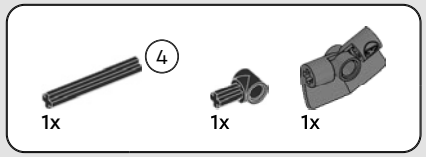

482

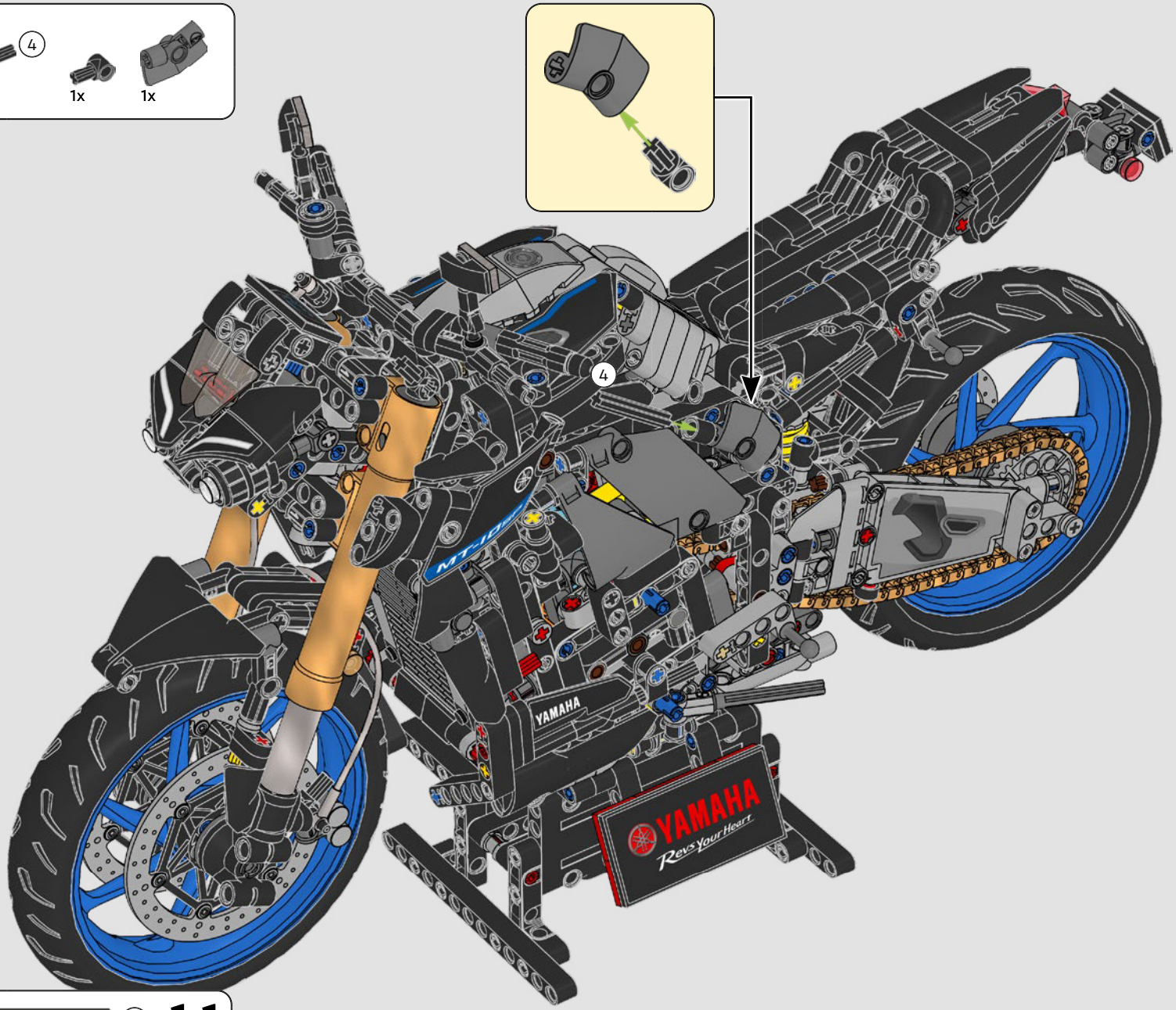

4 1:1

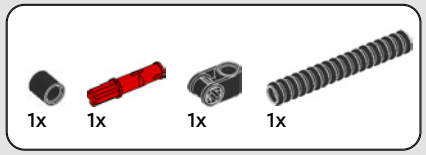

483

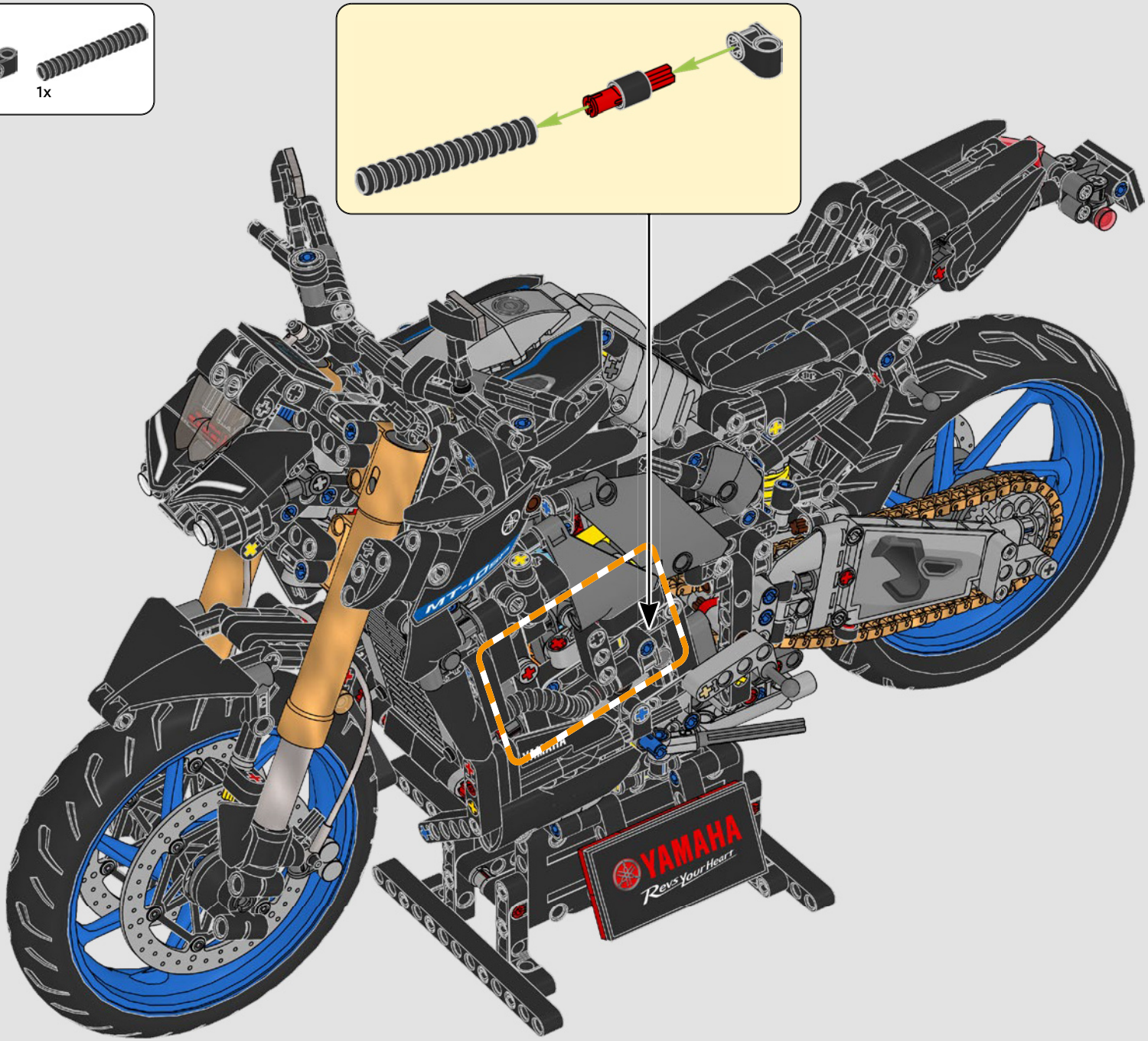

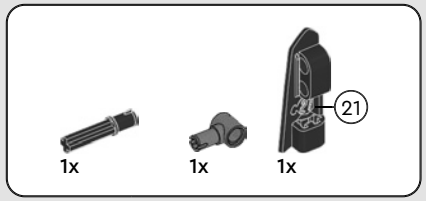

484

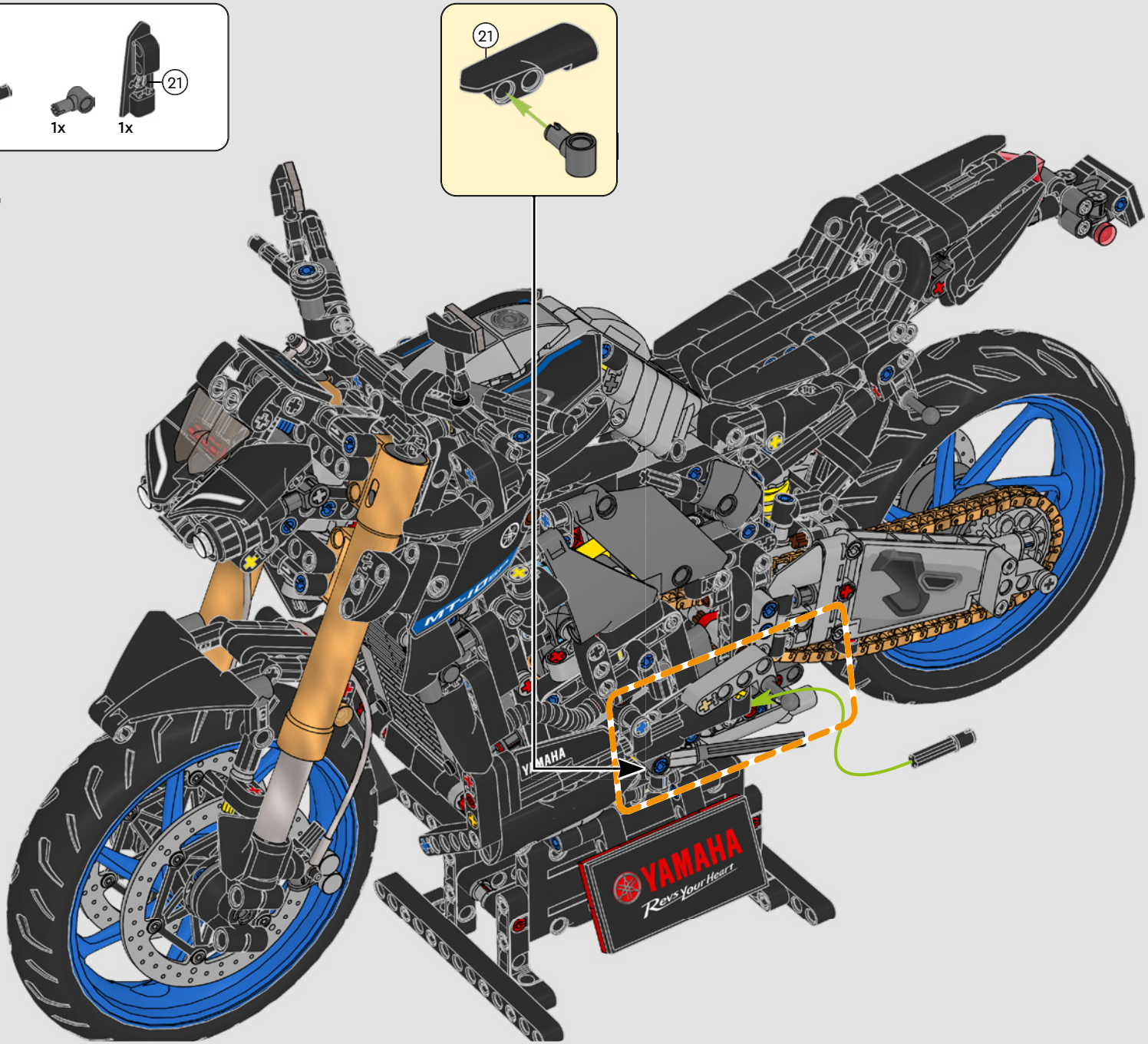

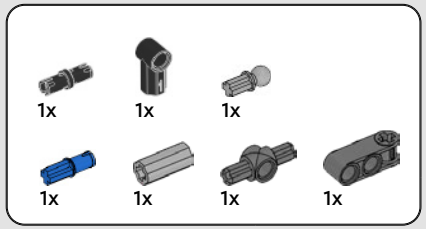

485

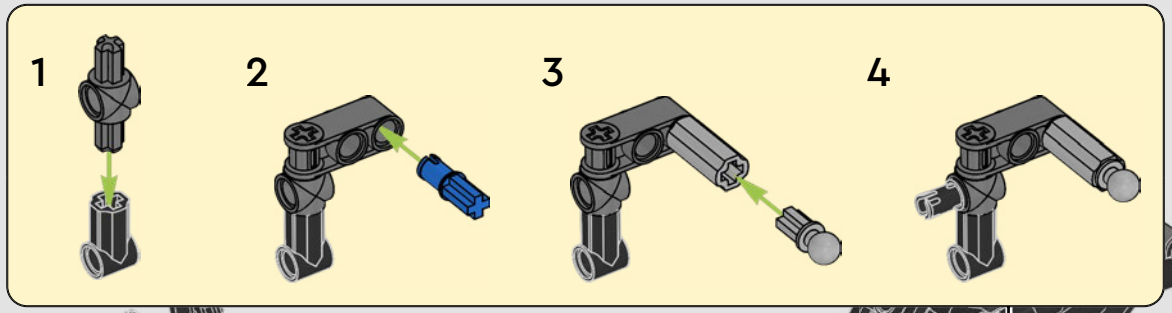

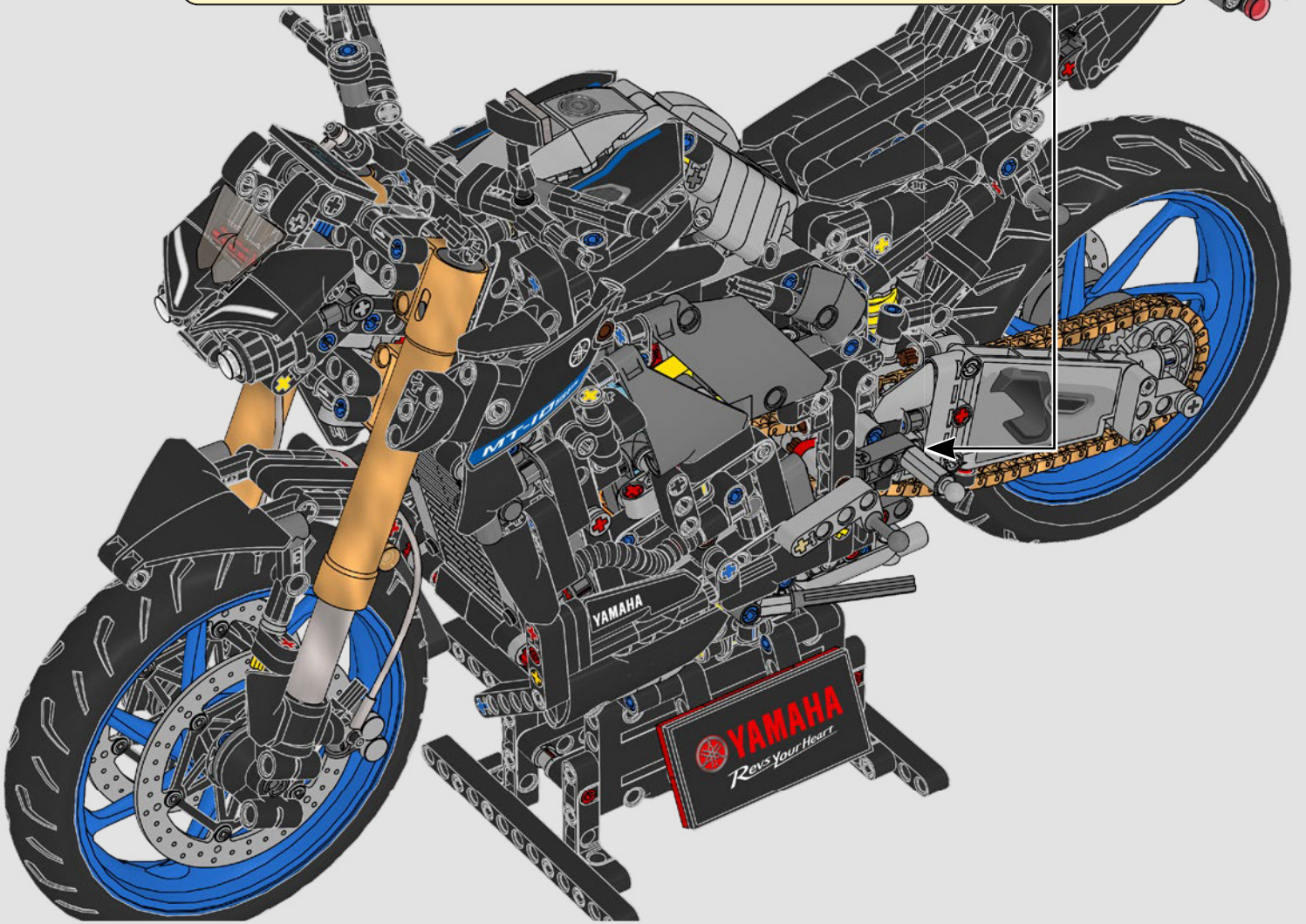

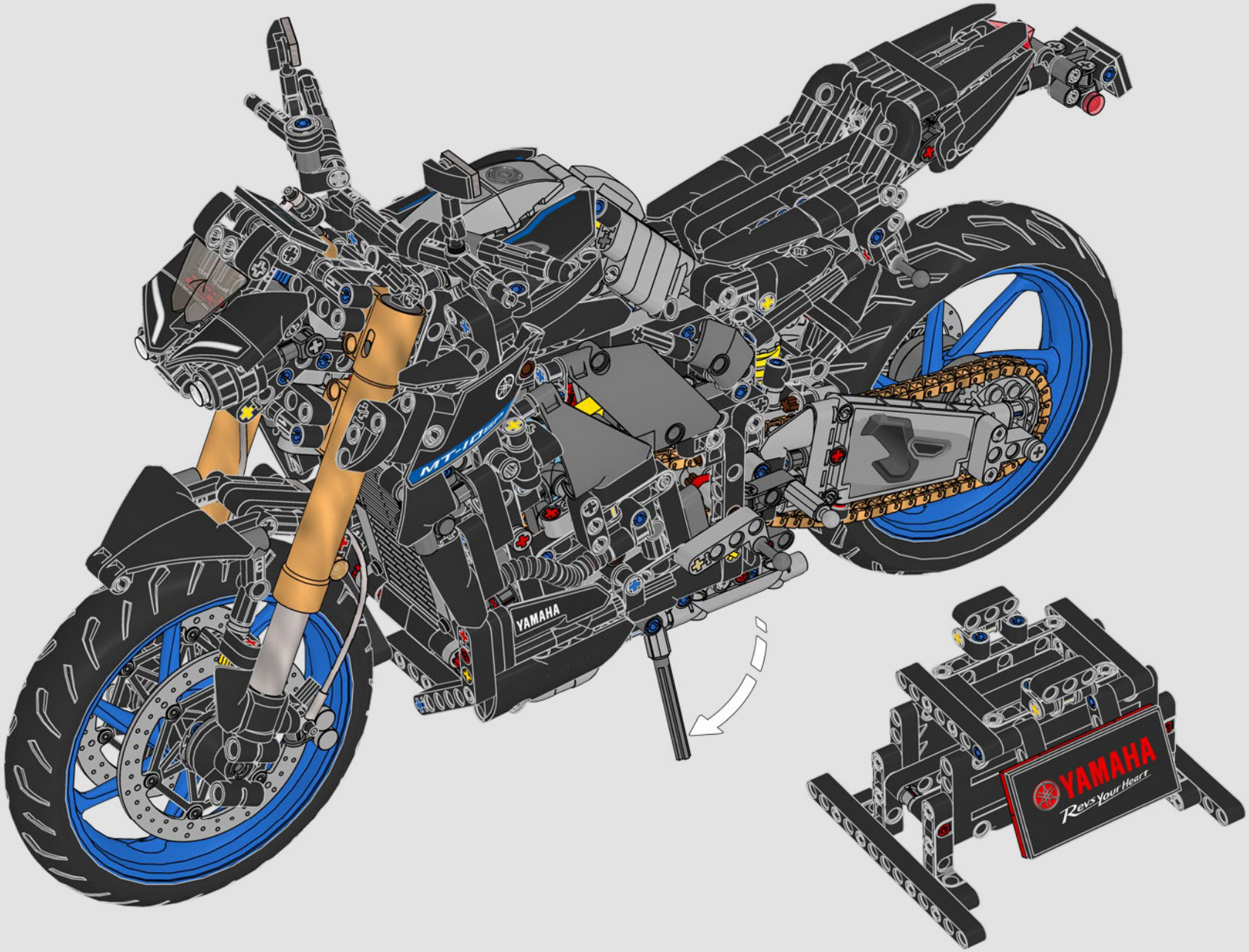
YAMAHA
YAMAHA
Revs Your Heart

YOU COULD WIN

YOU COULD
WIN

Your feedback will help shape the future development of this product series.

Visit:

DU KÖNNTEST
GEWINNEN

Dein Feedback trägt zur Weiterentwicklung dieser Produktreihe bei.

Geh auf:

VOUS POURRIEZ
GAGNER

Vos commentaires nous aideront à concevoir les futurs produits de cette gamme.

Visitez :

POTRESTI
VINCERE TU

La tua opinione ci aiuterà a migliorare la creazione futura di questa linea di prodotti.

Visita:

PUEDES
GANAR

Tu opinión contribuirá al futuro de esta serie de productos.

Visita:

轻松获奖

您的反馈将有助于我们在今后改进本产品系列。

请访问：

LEGO.com/productfeedback

You also have the chance to win a LEGO® set.

Terms and conditions apply.*

Außerdem hast du die Chance, ein LEGO® Set zu gewinnen.

Es gelten die Teilnahmebedingungen.*

Vous pourriez également gagner un ensemble LEGO®.

Des conditions s'appliquent.*

Hai anche la possibilità di vincere un set LEGO®.

Termini e condizioni sono applicabili.*

También tienes la oportunidad de ganar un set LEGO®.

Aplican términos y condiciones.*

您还有机会赢取乐高®套装。

条款和条件适用。*

**LEGO.com/productfeedback-terms*

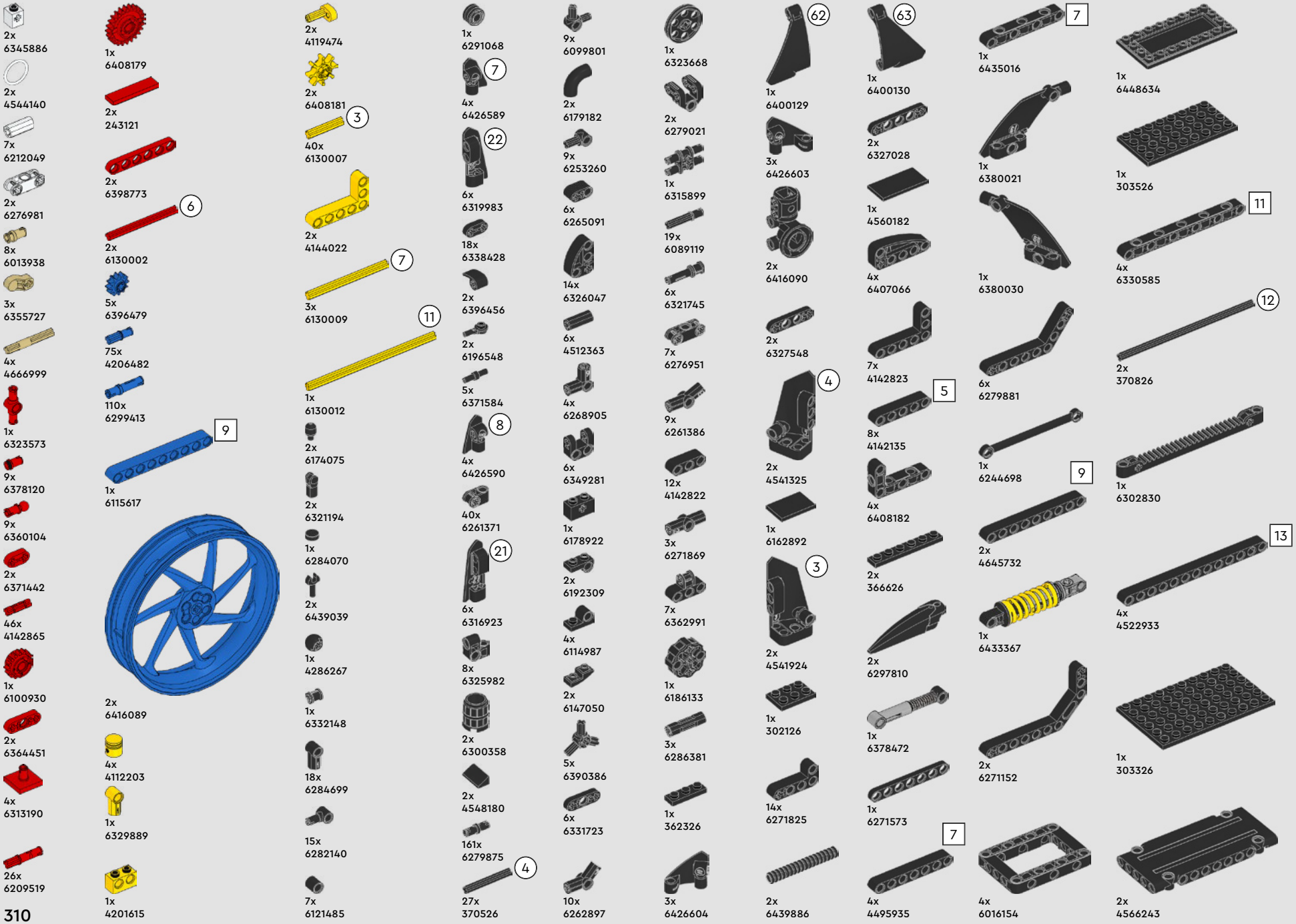
2x 6345886
2x 4544140
7x 6212049
2x 6276981
8x 6013938
3x 6355727
4x 4666999
1x 6323573
9x 6378120
9x 6360104
2x 6371442
46x 4142865
1x 6100930
2x 6364451
4x 6313190
26x 6209519
1x 6408179
2x 243121
2x 6398773
6
2x 6130002
5x 6396479
75x 4206482
110x 6299413
9
1x 6115617
2x 6416089
4x 4112203
1x 6329889
1x 4201615
2x 4119474
2x 6408181
3
40x 6130007
2x 4144022
7
3x 6130009
11
1x 6130012
2x 6174075
2x 6321194
1x 6284070
2x 6439039
1x 4286267
1x 6332148
18x 6284699
15x 6282140
7x 6121485
1x 6291068
7
4x 6426589
22
6x 6319983
18x 6338428
2x 6396456
2x 6196548
5x 6371584
8
4x 6426590
40x 6261371
21
6x 6316923
8x 6325982
2x 6300358
2x 4548180
161x 6279875
4
27x 370526
9x 6099801
2x 6179182
9x 6253260
6x 6265091
14x 6326047
6x 4512363
4x 6268905
6x 6349281
1x 6178922
2x 6192309
4x 6114987
2x 6147050
5x 6390386
6x 6331723
10x 6262897
1x 6323668
2x 6279021
1x 6315899
19x 6089119
6x 6321745
7x 6276951
9x 6261386
12x 4142822
3x 6271869
7x 6362991
1x 6186133
3x 6286381
1x 362326
3x 6426604
62
1x 6400129
3x 6426603
2x 6416090
2x 6327548
4
2x 4541325
1x 6162892
3
2x 4541924
1x 302126
14x 6271825
2x 6439886
63
1x 6400130
2x 6327028
1x 4560182
4x 6407066
7x 4142823
5
8x 4142135
4x 6408182
2x 366626
2x 6297810
1x 6378472
1x 6271573
7
4x 4495935
7
1x 6435016
1x 6380021
1x 6380030
6x 6279881
1x 6244698
9
2x 4645732
1x 6433367
2x 6271152
4x 6016154
1x 6448634
1x 303526
11
4x 6330585
12
2x 370826
1x 6302830
13
4x 4522933
1x 303326
2x 4566243

1x 6265643

15
2x 6321716

15
2x 4542573

1x 6330607

1x 6330608

3x 6391159

2x 6274738

2x 6168665

2x 6258607

3x 6245252

1x 6252042

2x 6185551

3x 6265128

2x 6447082

7
1x 6426591

8
1x 6426593

3,2
2x 6031821

2x 6274747

3
11x 6135494

5
4x 6159763

15x 6271165

4x 6284071

9x 6275844

2x 6321303

16x 6183784

2x 4211399

2x 6443149

7
1x 6438429

2x 6348143

8
1x 6438430

2x 4211880

7x 6151349

2x 4640536

1x 6123815

15x 6265089

2x 4512360

4x 4211714

7x 6361459

2x 6380605

1x 6349478

2x 4211398

8x 4211350

8x 6092111

4x 6271347

4x 6000018

6x 6271815

1x 6262905

4x 6279023

1x 6338962

19x 6321747

2x 6276969

12x 4552348

1x 6282158

8x 4211655

2x 6346487

3x 6408168

5x 6273212

2x 4558169

2x 6370947

4x 6383961

2x 6331574

1x 6271831

1x 4622803

3x 4211445

4x 6457283

1x 6093869

4x 6331428

3x 4503416

5
12x 4211639

1x 6195314

5x 6055519

5
2x 4211651

1x 6335830

1x 6285654

4x 6170293

7
1x 4495930

2x 6257136

2x 6279885

2x 6276836

2x 6331551

11
3x 4611705

2x 6327007

2x 6282144

10x 6100030

10x 6395635

1x 6012451

4x 6365695

2x 6135014

12x 6280395

2x 6375679

2x 6408180

1x 6271356

20x 6273715

9x 6167281

1x 4210665

1x 6366184

2x 6426611

2x 4610378

62
1x 6450241

4
7x 6083620

2x 4549886

63
1x 6450242

5,5
2x 4508553

7
4x 6432397

60
1x 6450238

61
1x 6450239

8
5x 4499858

13
2x 4522937

2x 6416662

3x 6210590

2x 6251539

2x 6217492

8x 6256803

64x 6348019

2x 6447081

LEGO and the LEGO logo are trademarks of the LEGO Group. ©2023 The LEGO Group.
YAMAHA, the Tuning Fork Mark, and likeness of the vehicle are properties of Yamaha Motor Co., Ltd. and are used with permission of Yamaha Motor Co., Ltd.

6473026