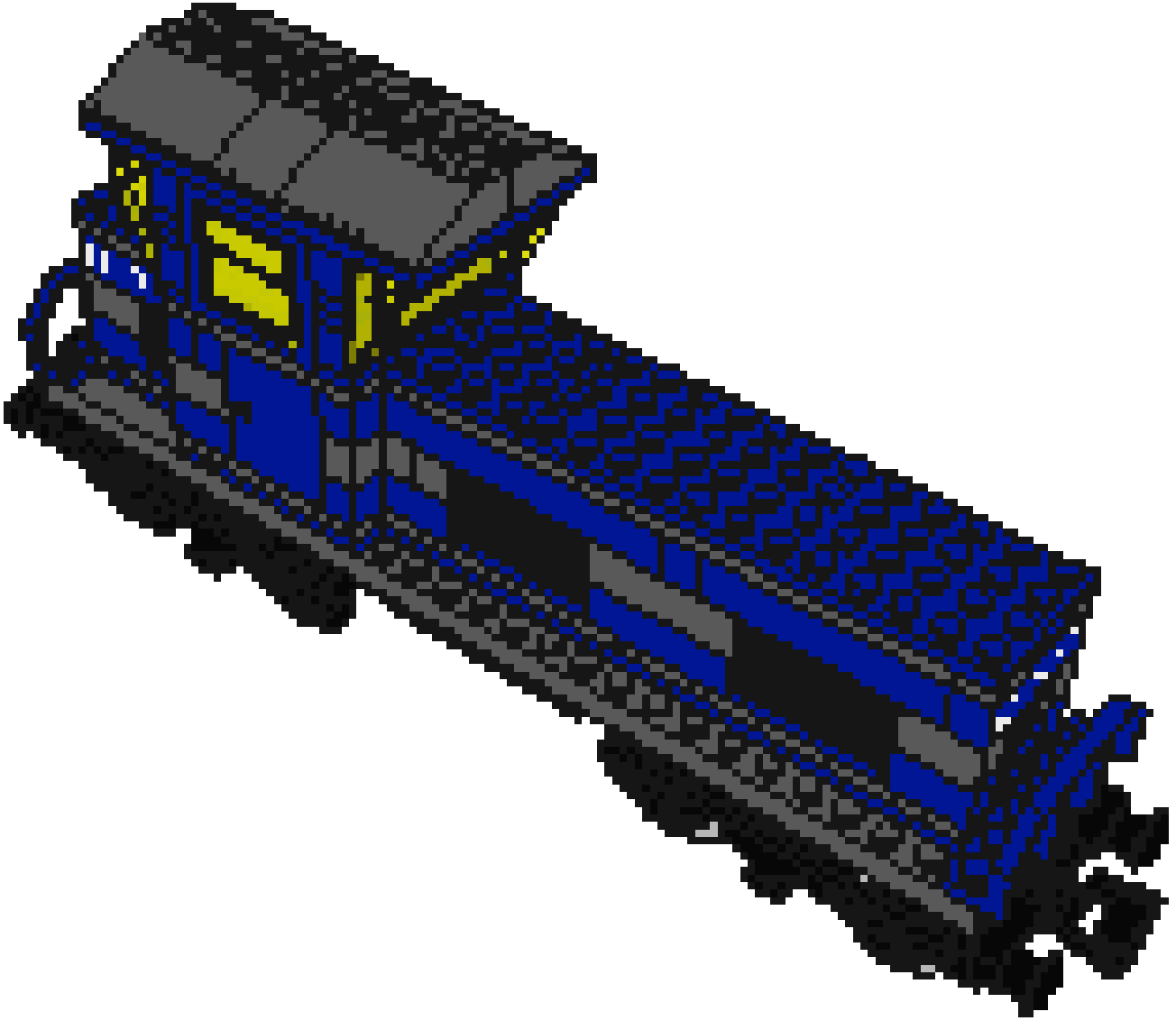

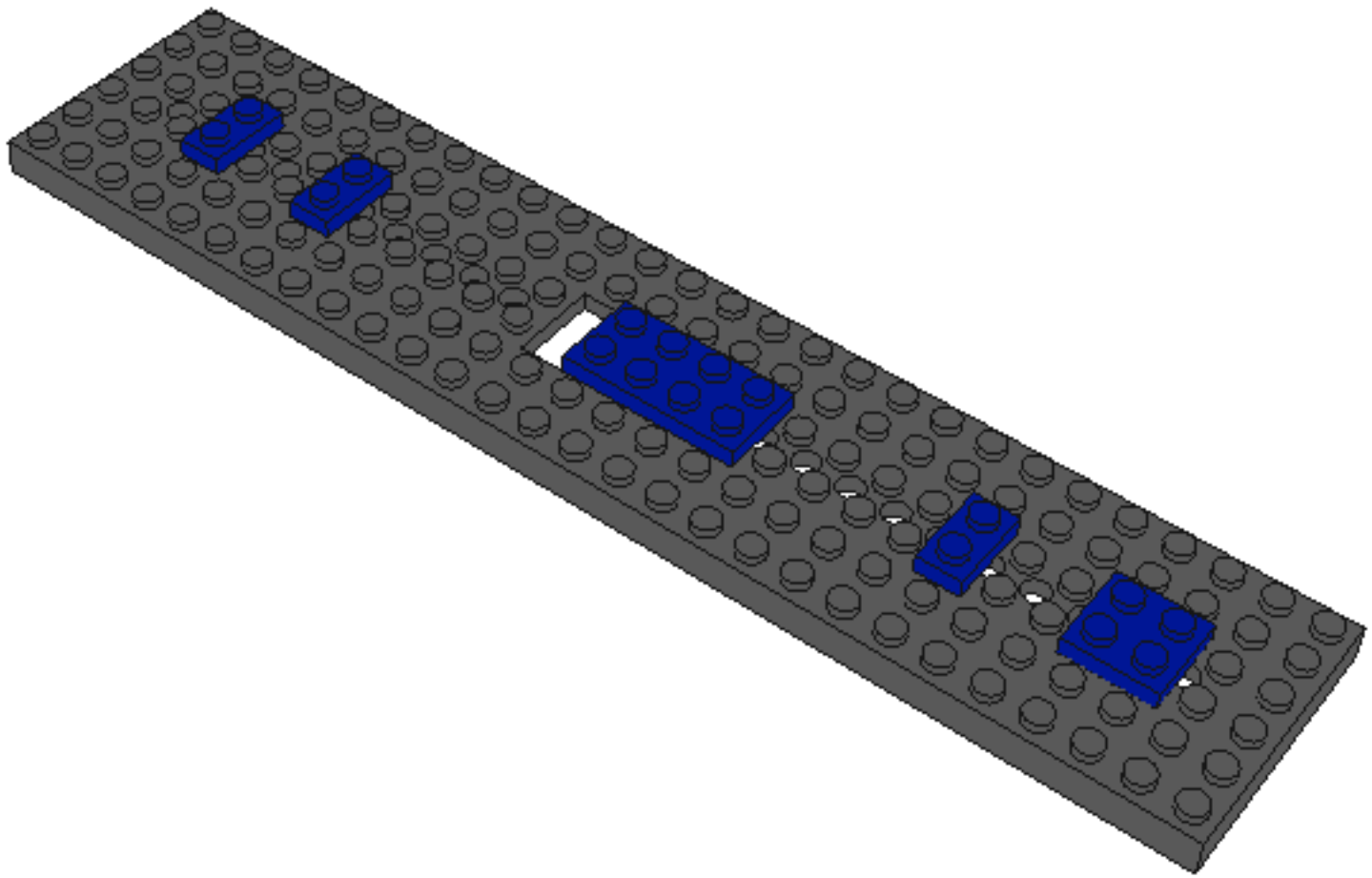

© Brickbuilder - 2006

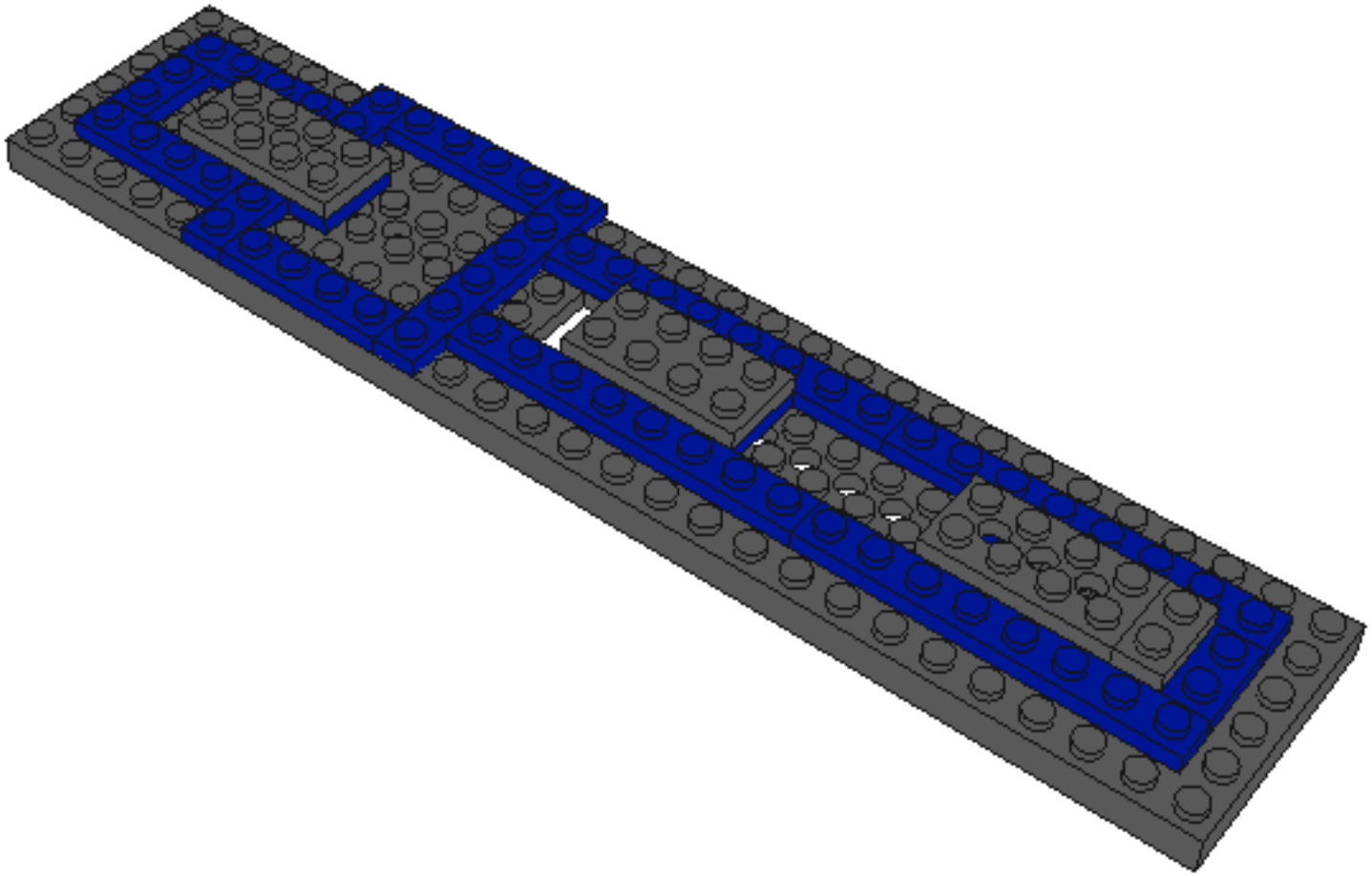

© Brickbuilder - 2006

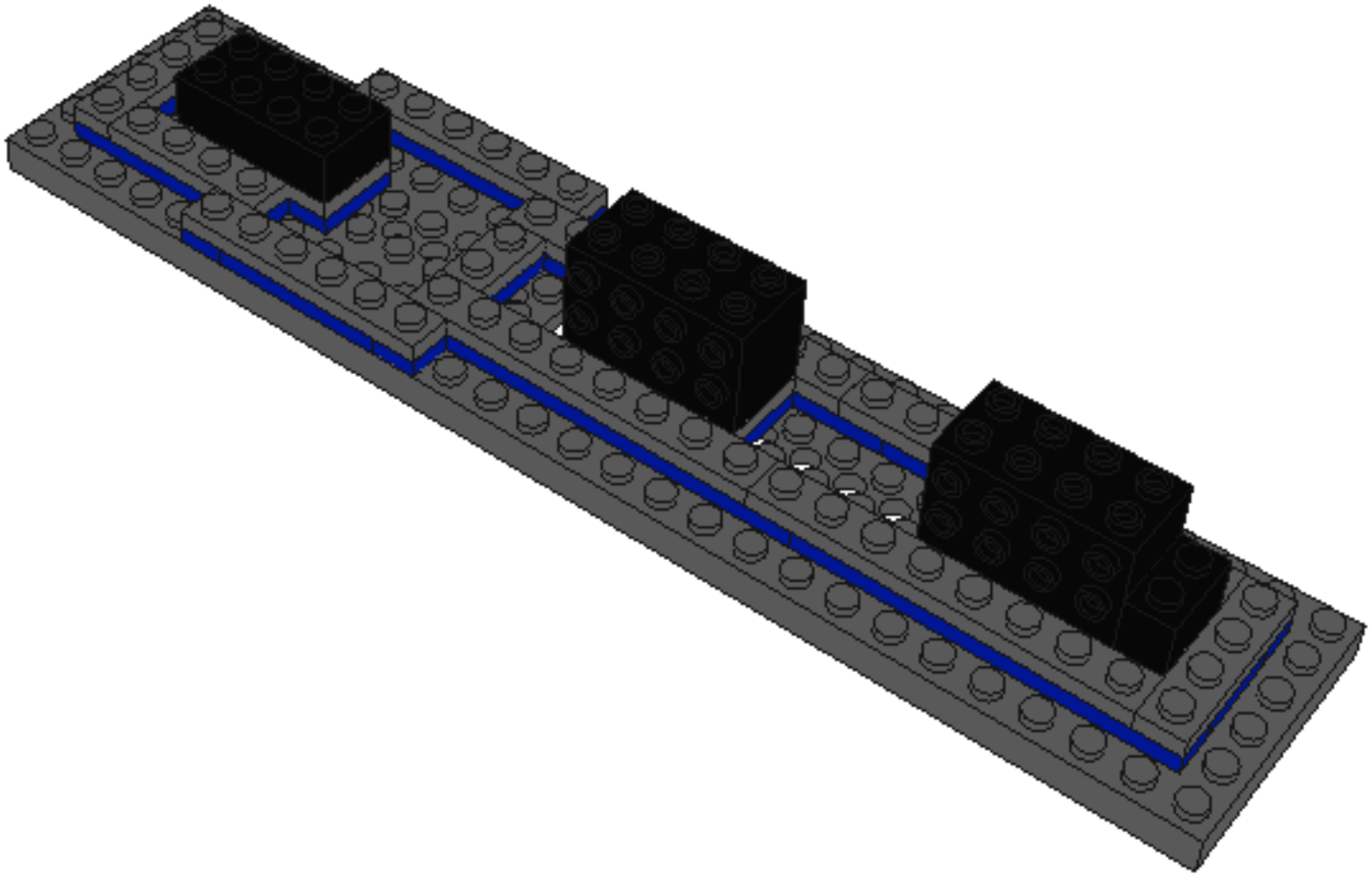

© Brickbuilder - 2006

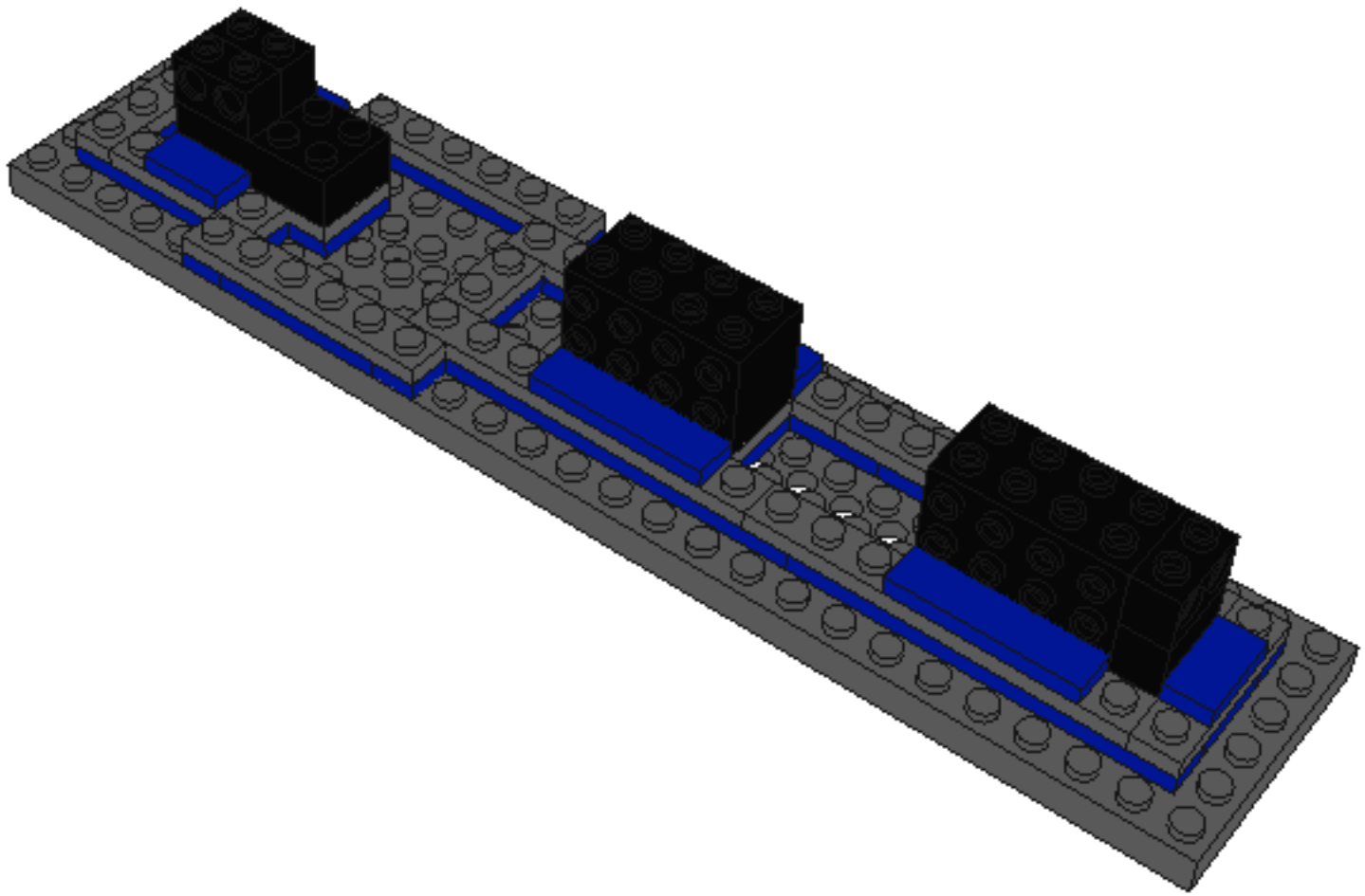

© Brickbuilder - 2006

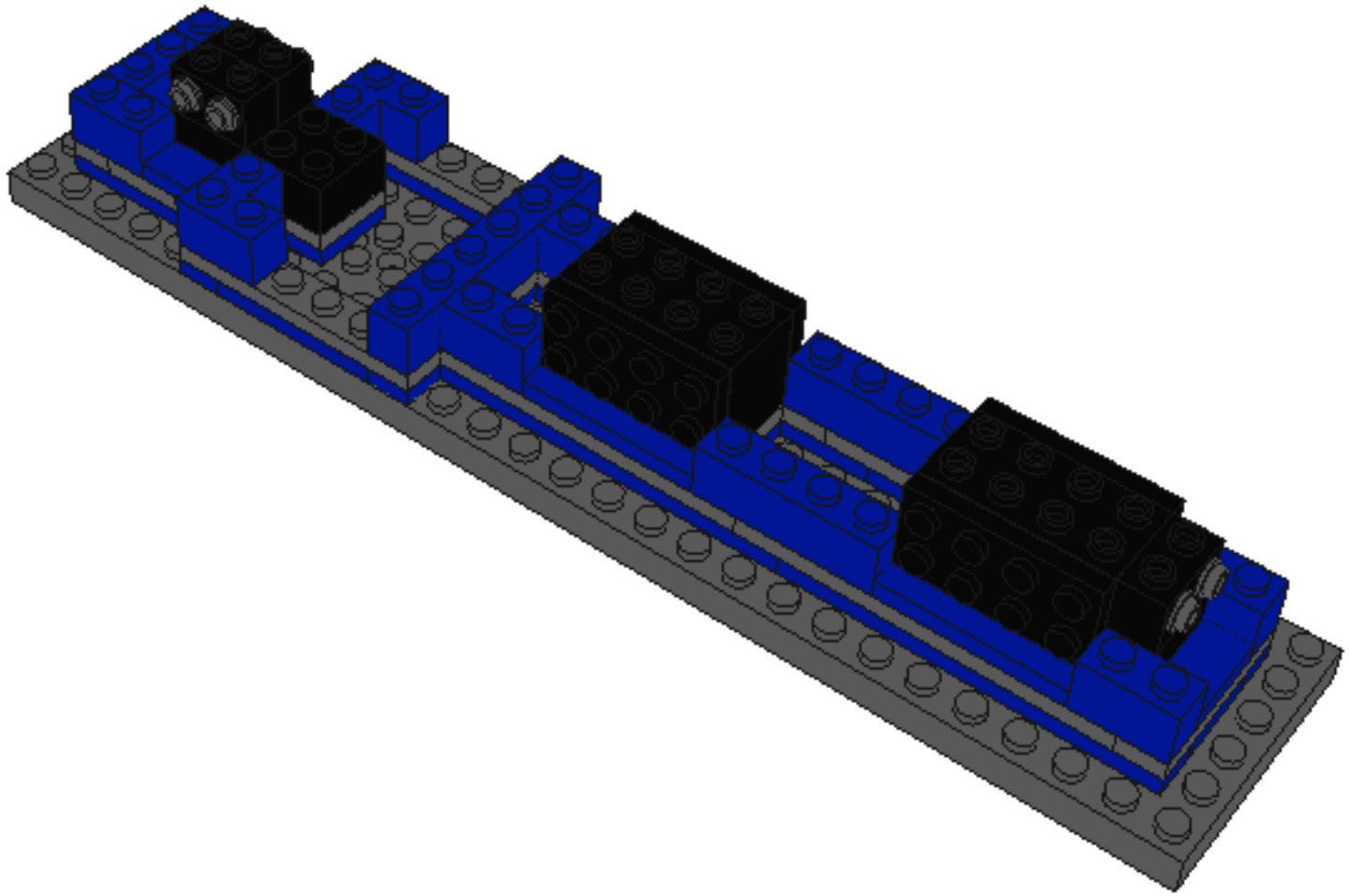

© Brickbuilder - 2006

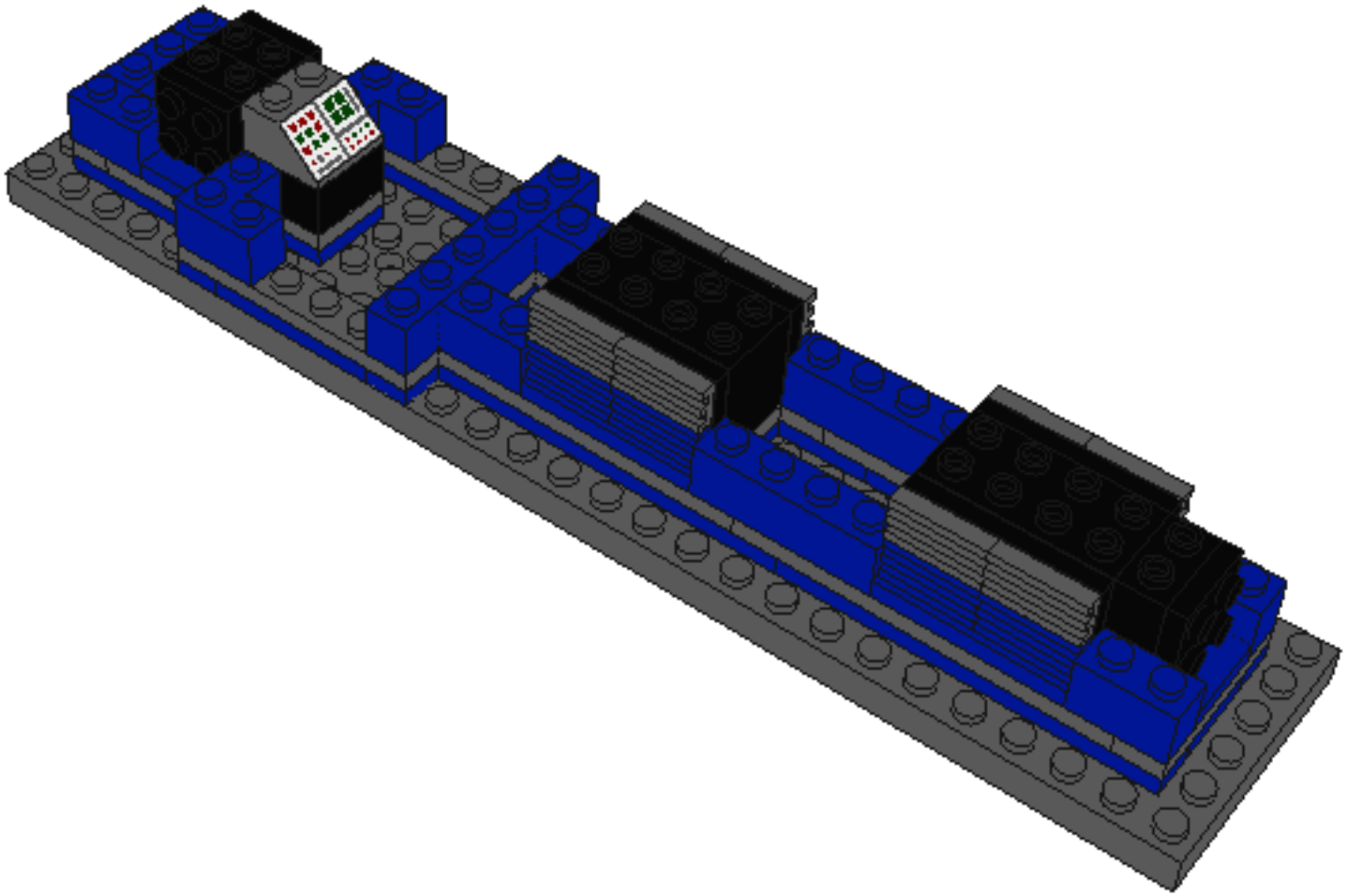

© Brickbuilder - 2006

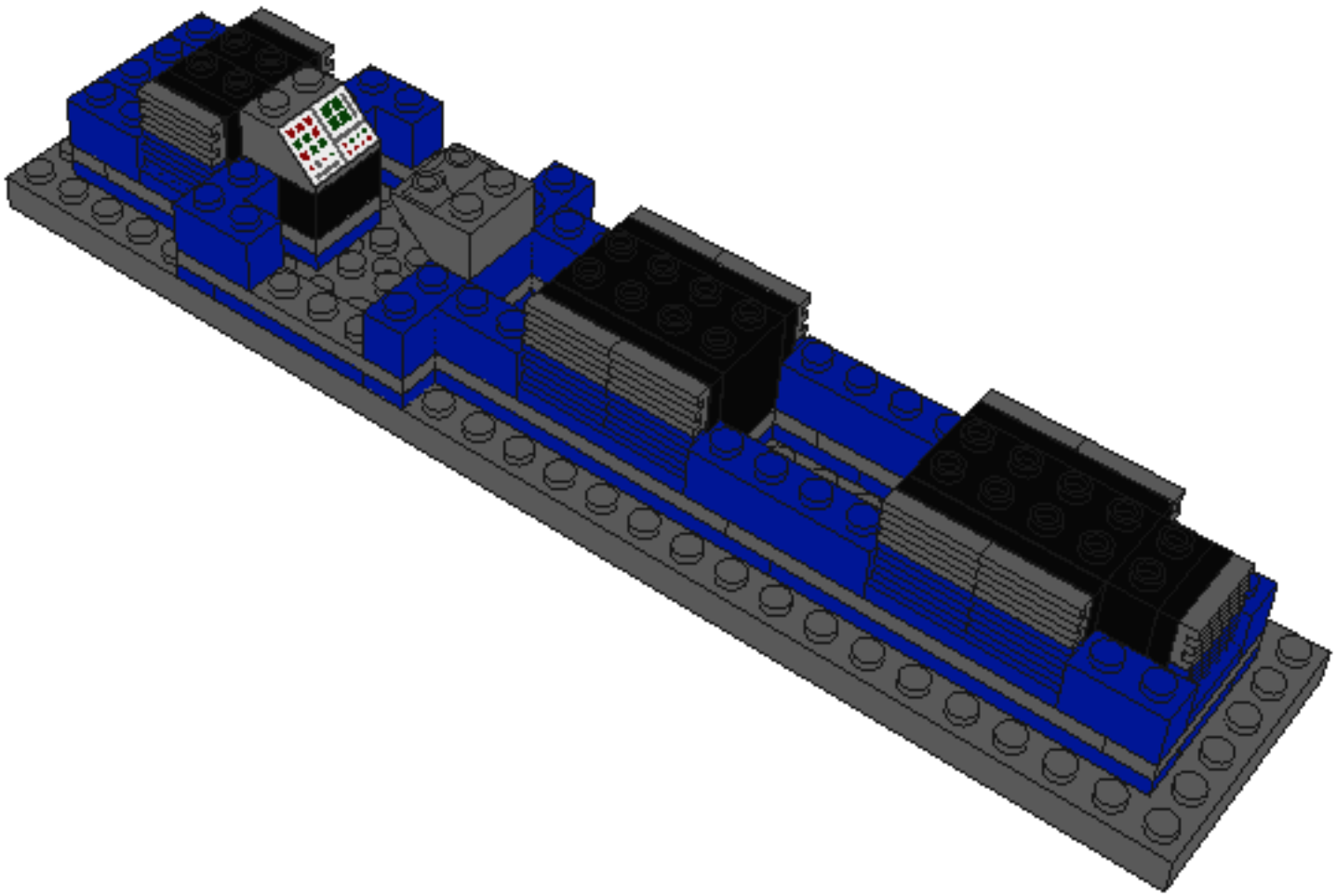

© Brickbuilder - 2006

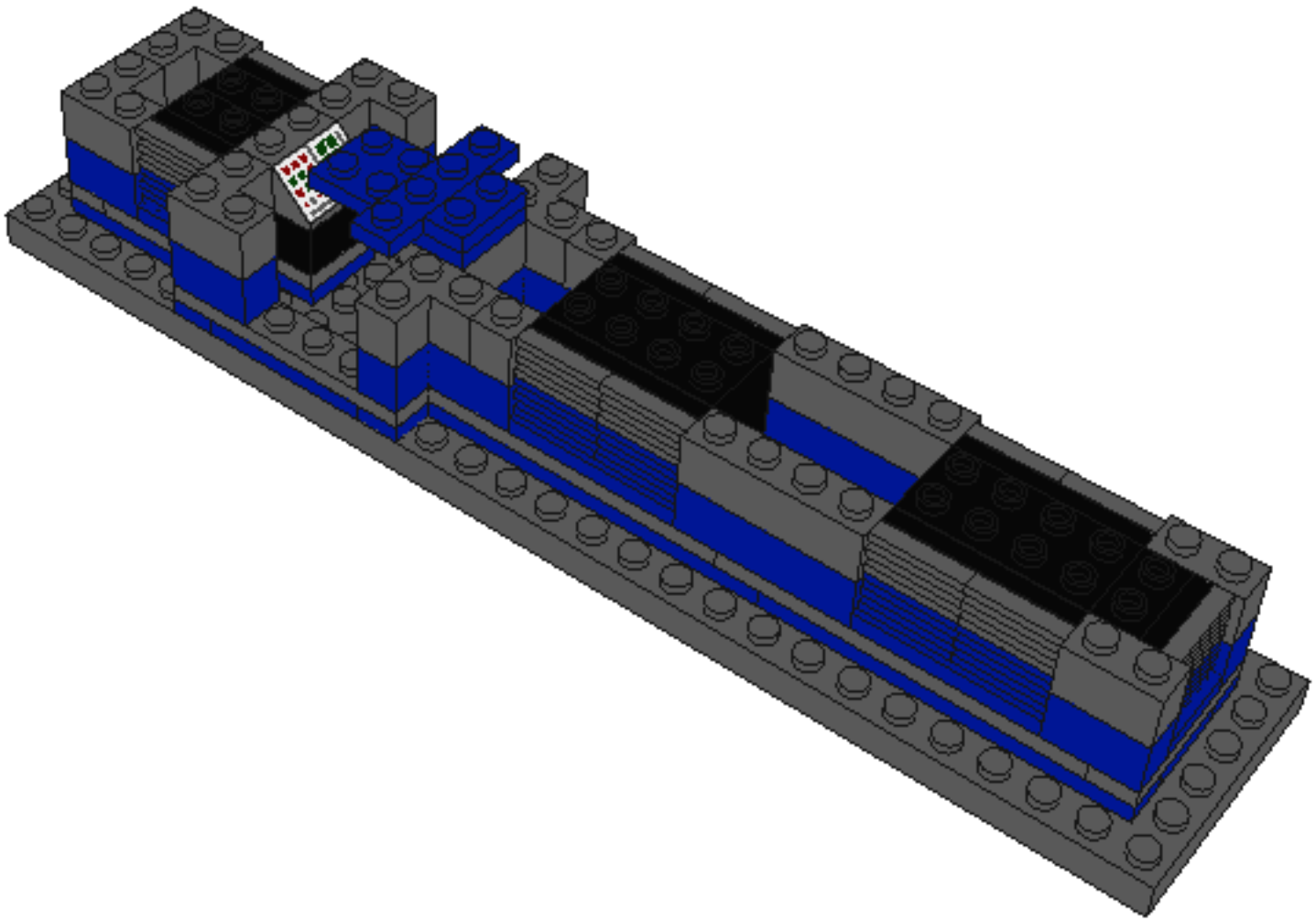

© Brickbuilder - 2006

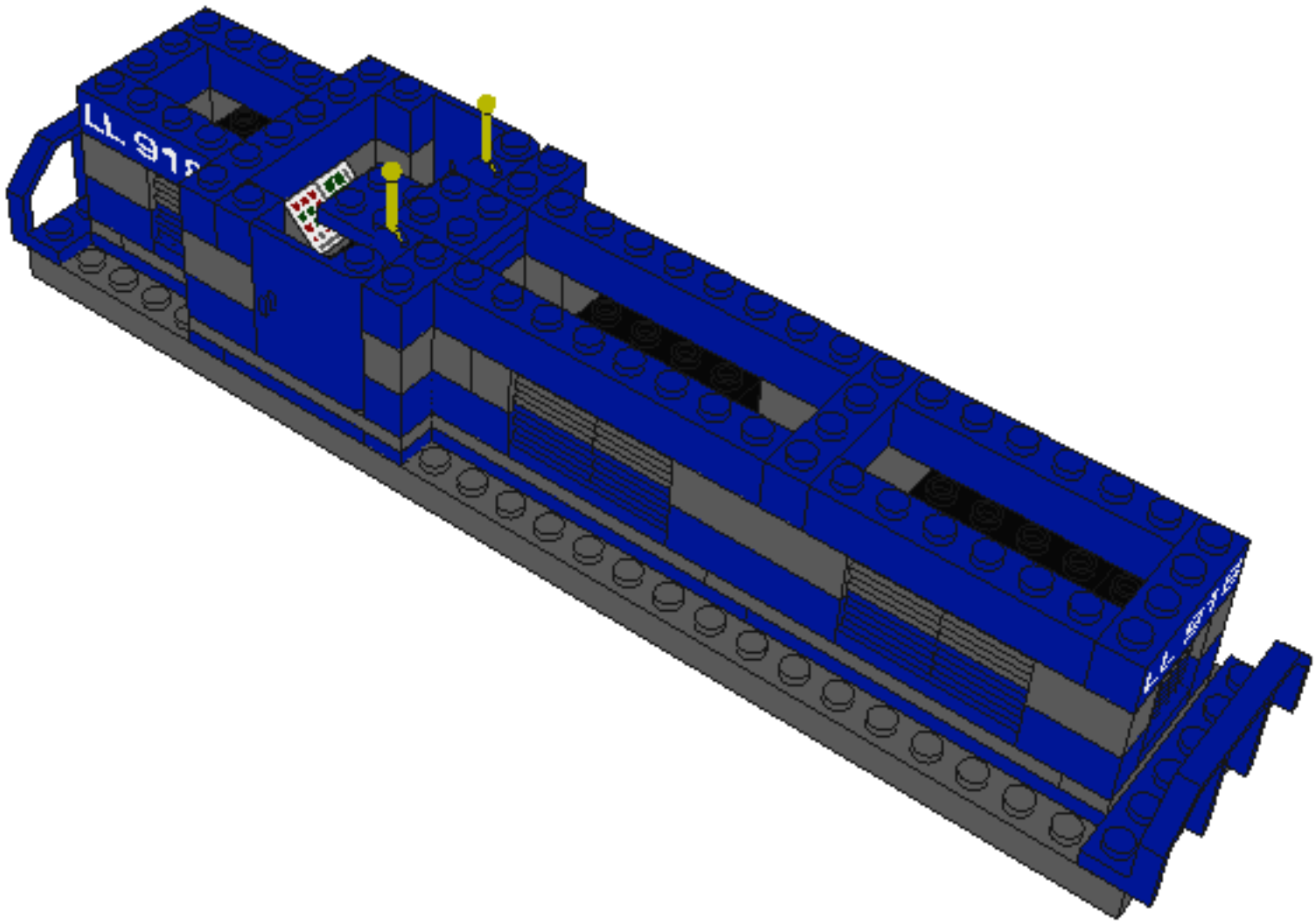

© Brickbuilder - 2006

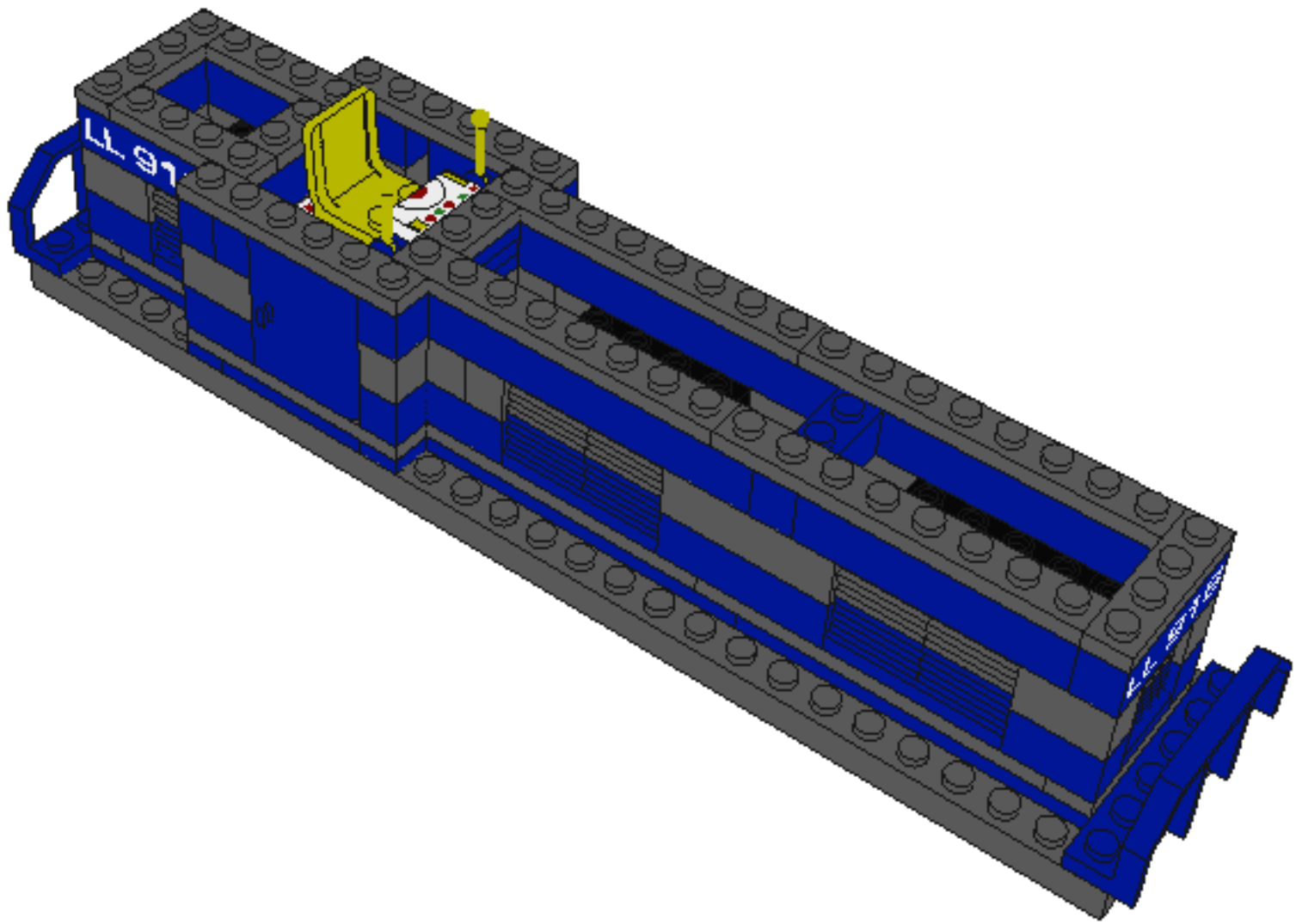

© Brickbuilder - 2006

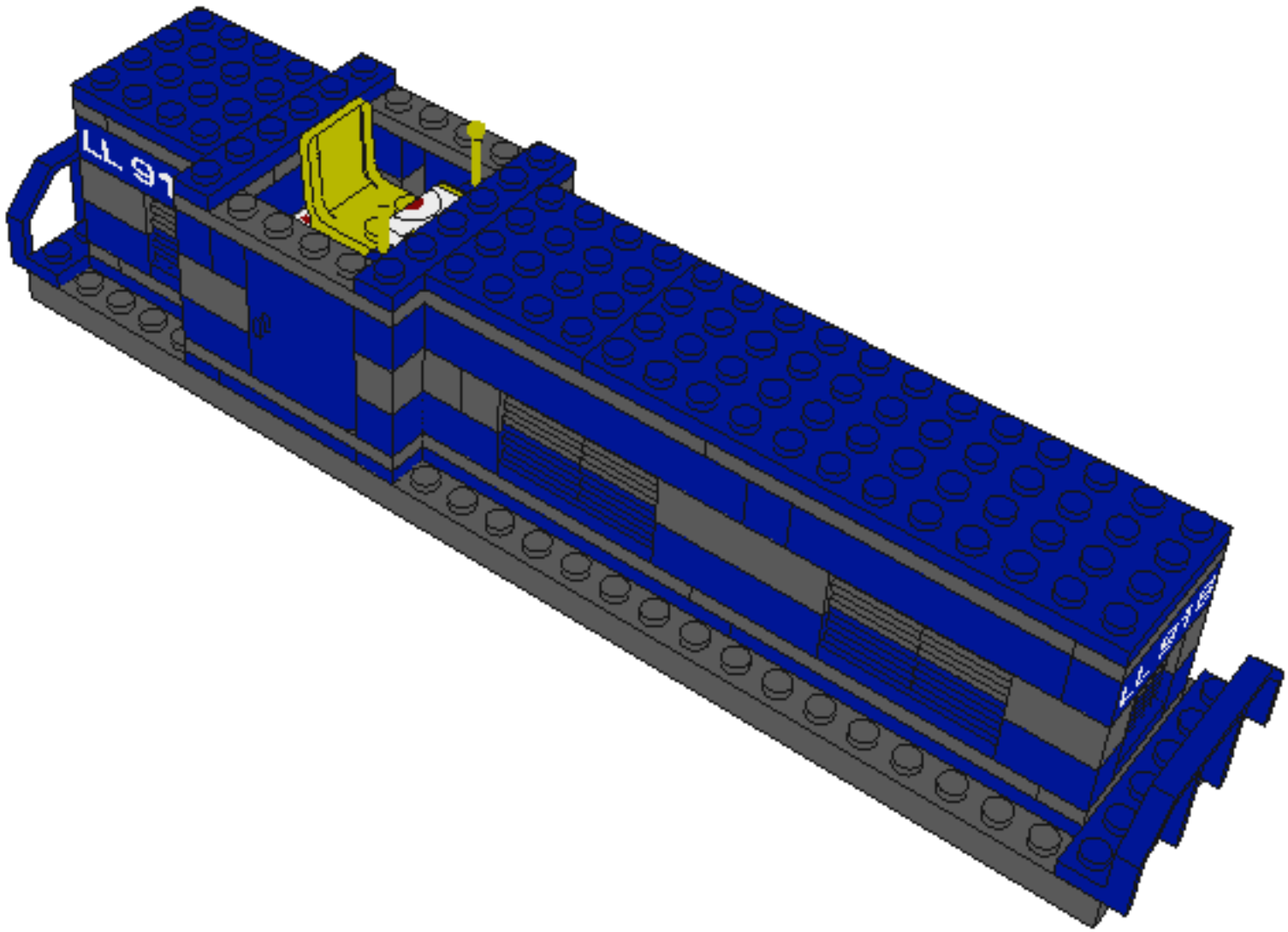

© Brickbuilder - 2006

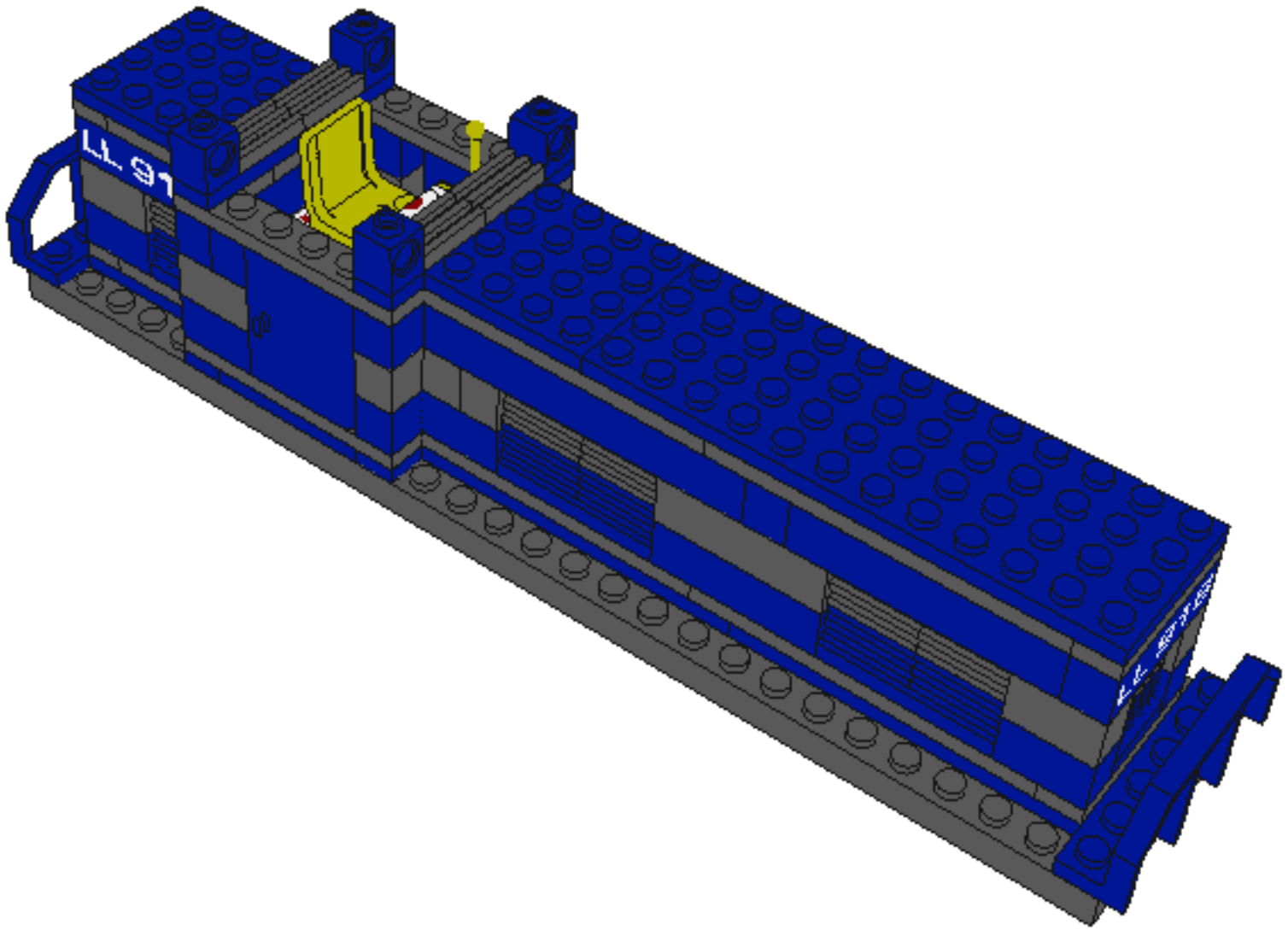

© Brickbuilder - 2006

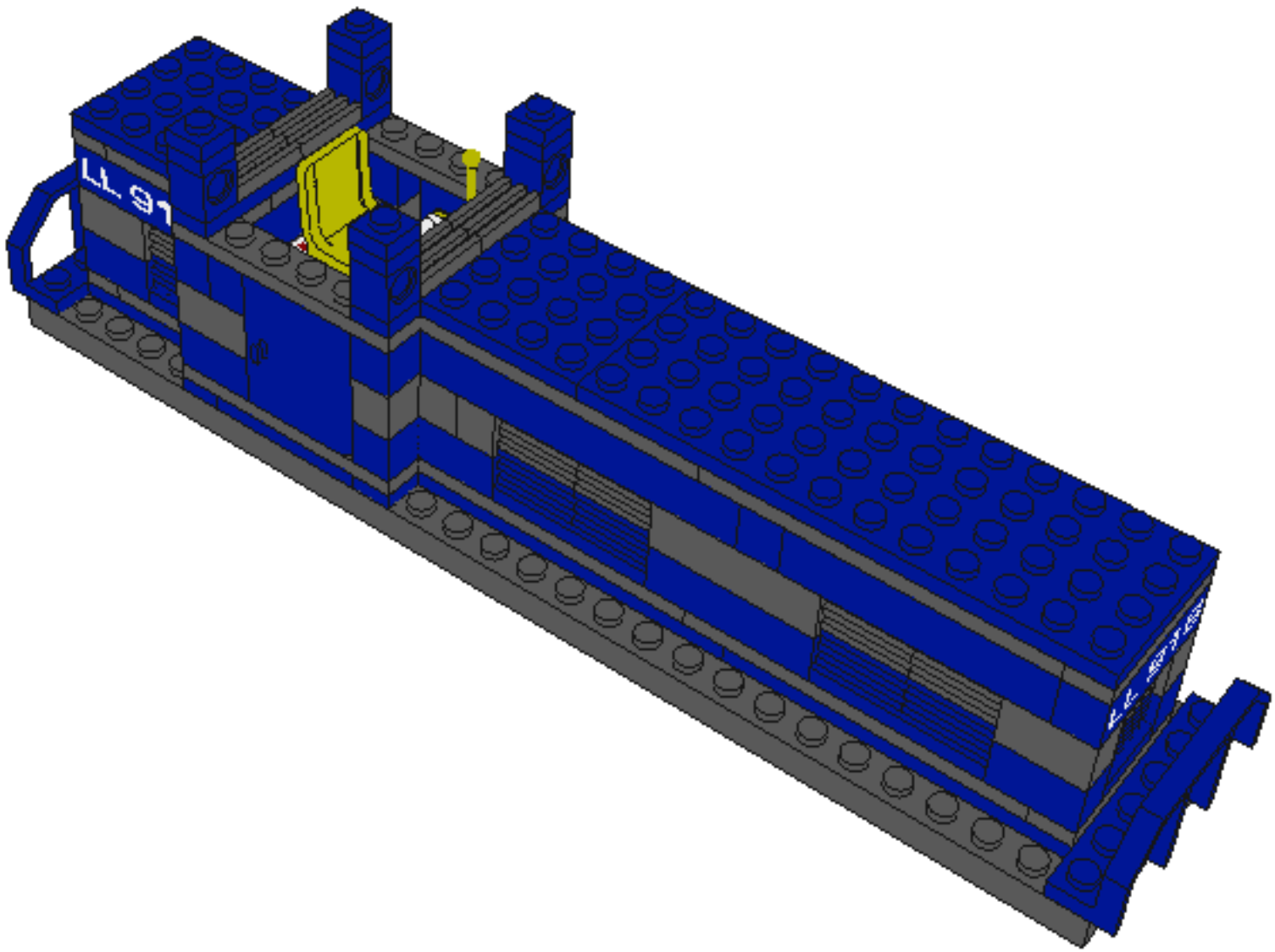

© Brickbuilder - 2006

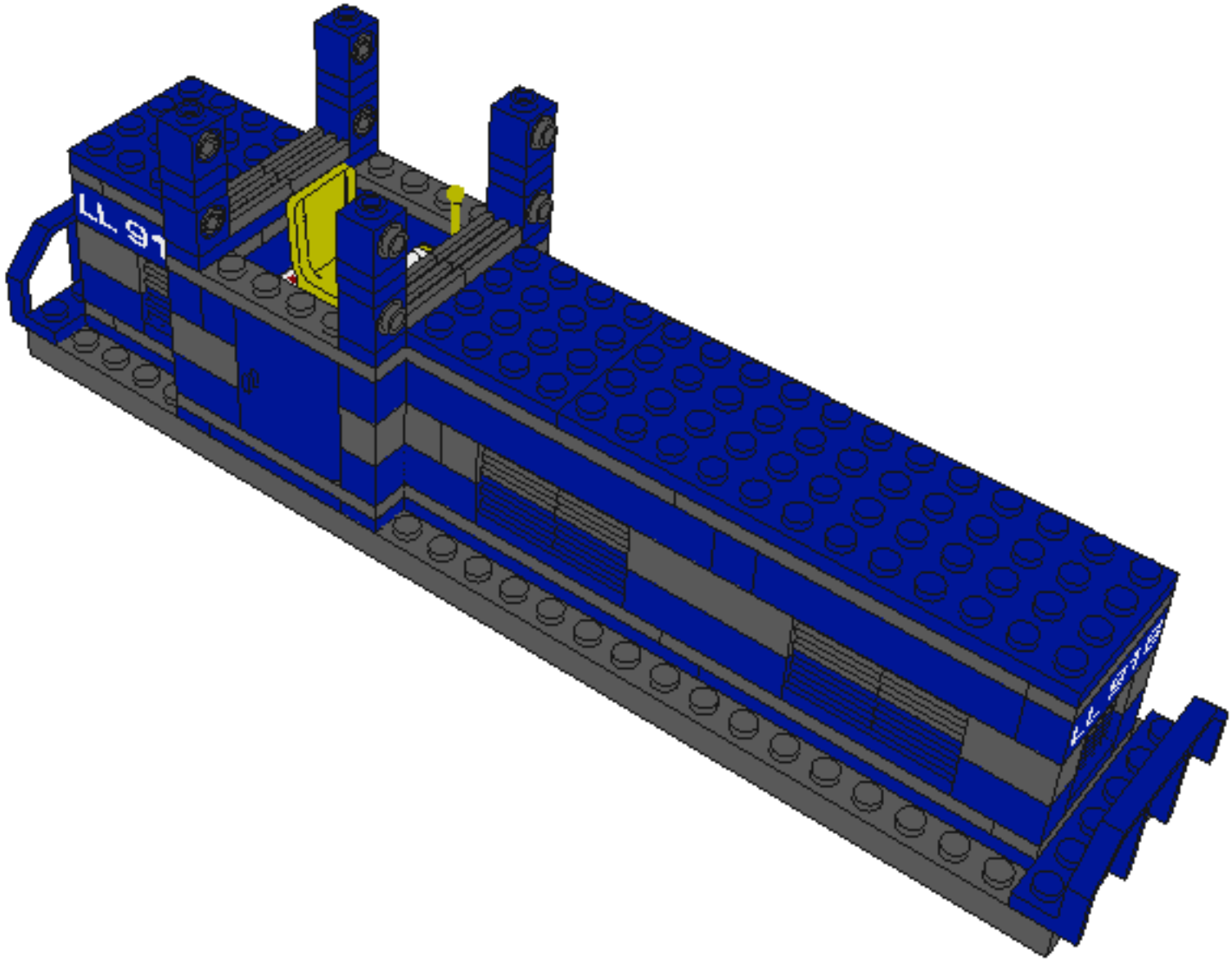

© Brickbuilder - 2006

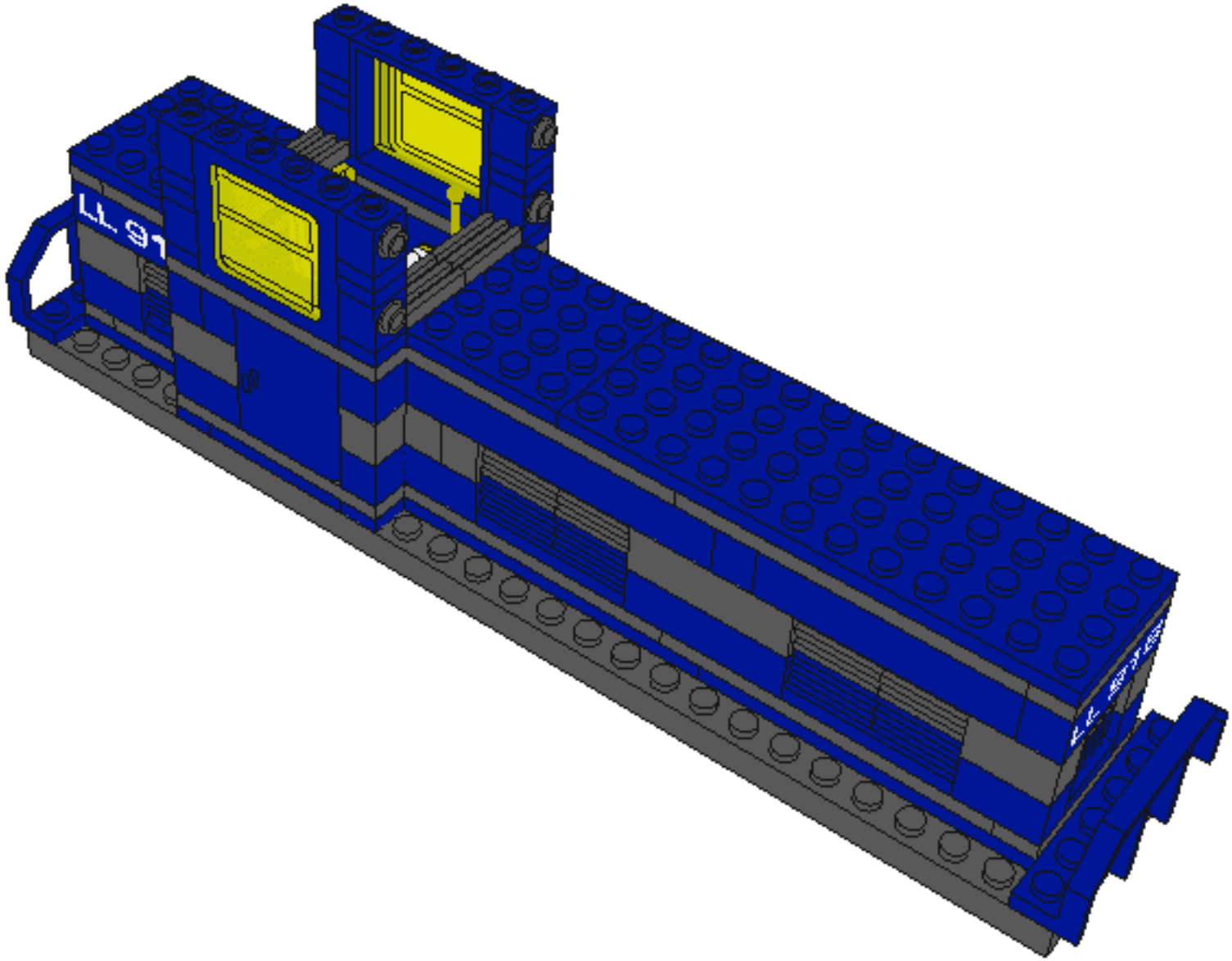

© Brickbuilder - 2006

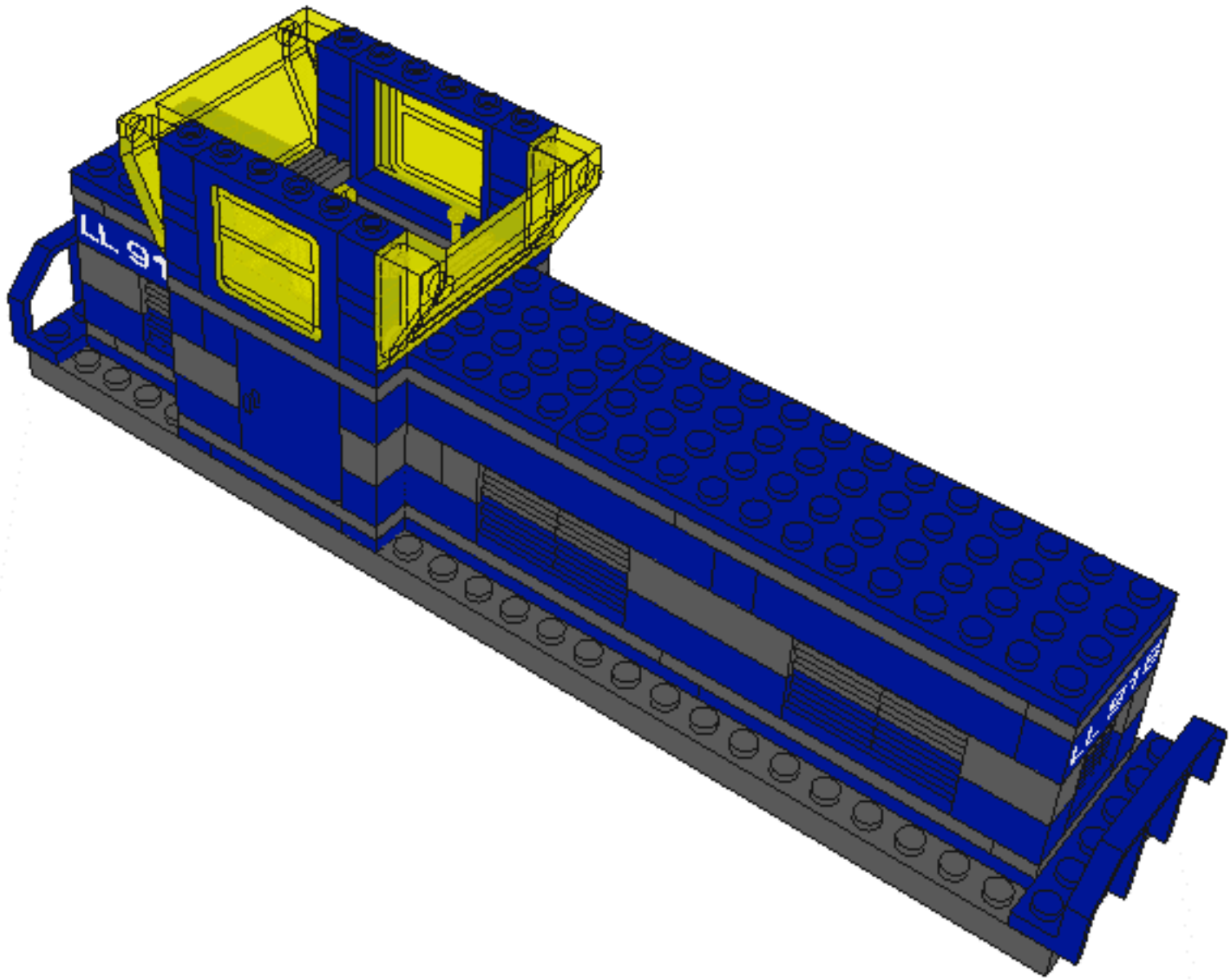

© Brickbuilder - 2006

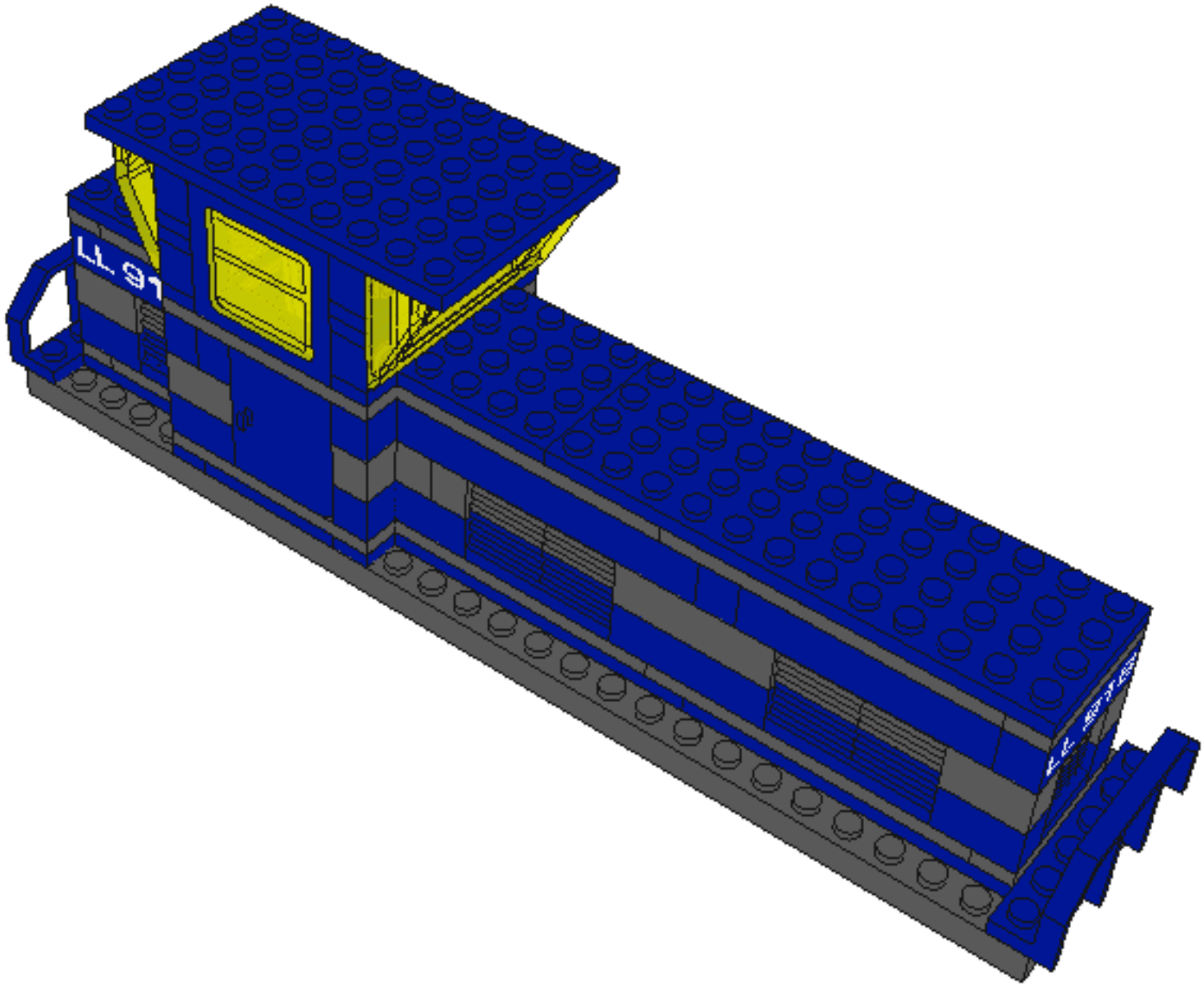

© Brickbuilder - 2006

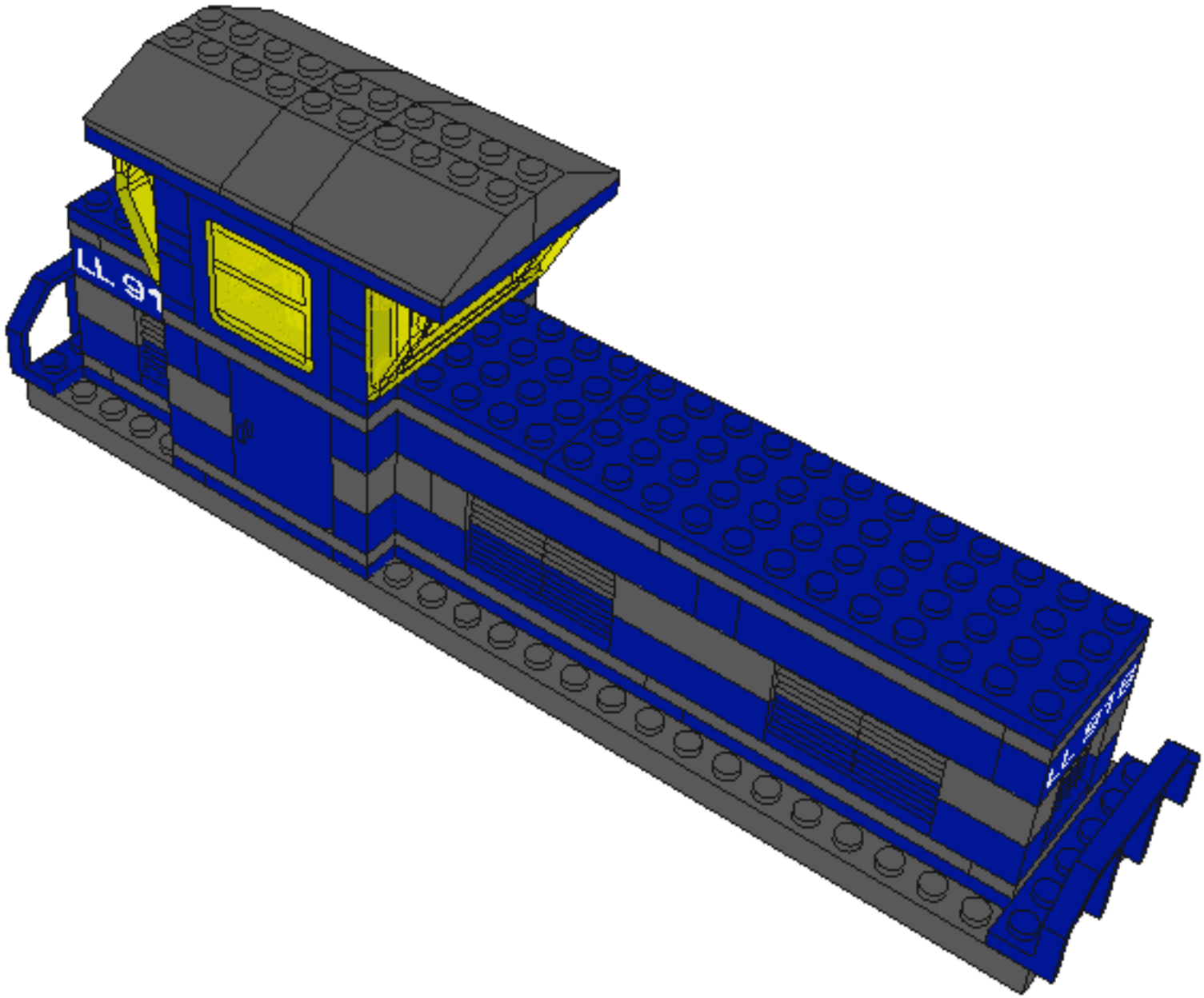

© Brickbuilder - 2006

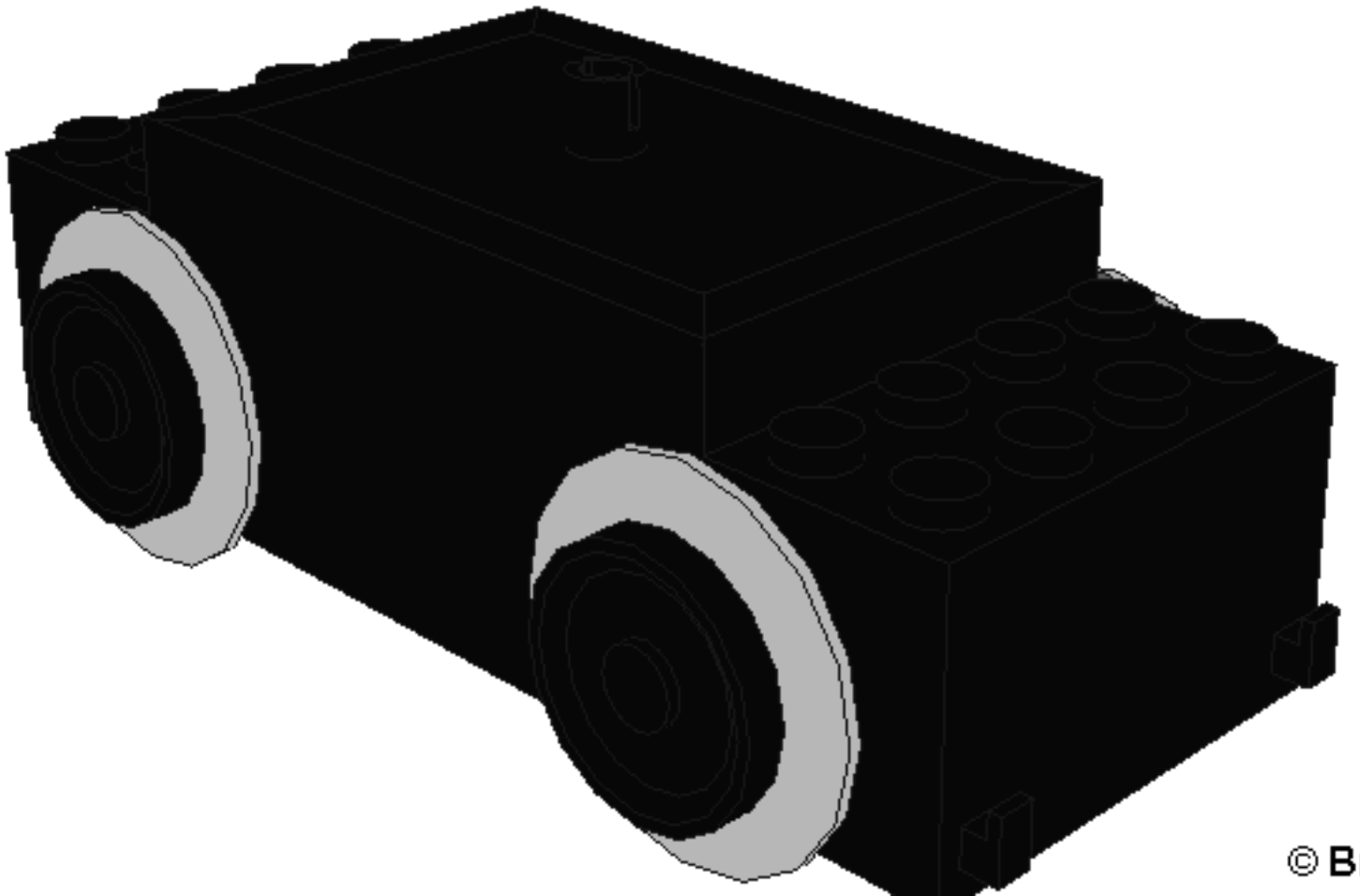

© Brickbuilder - 2006

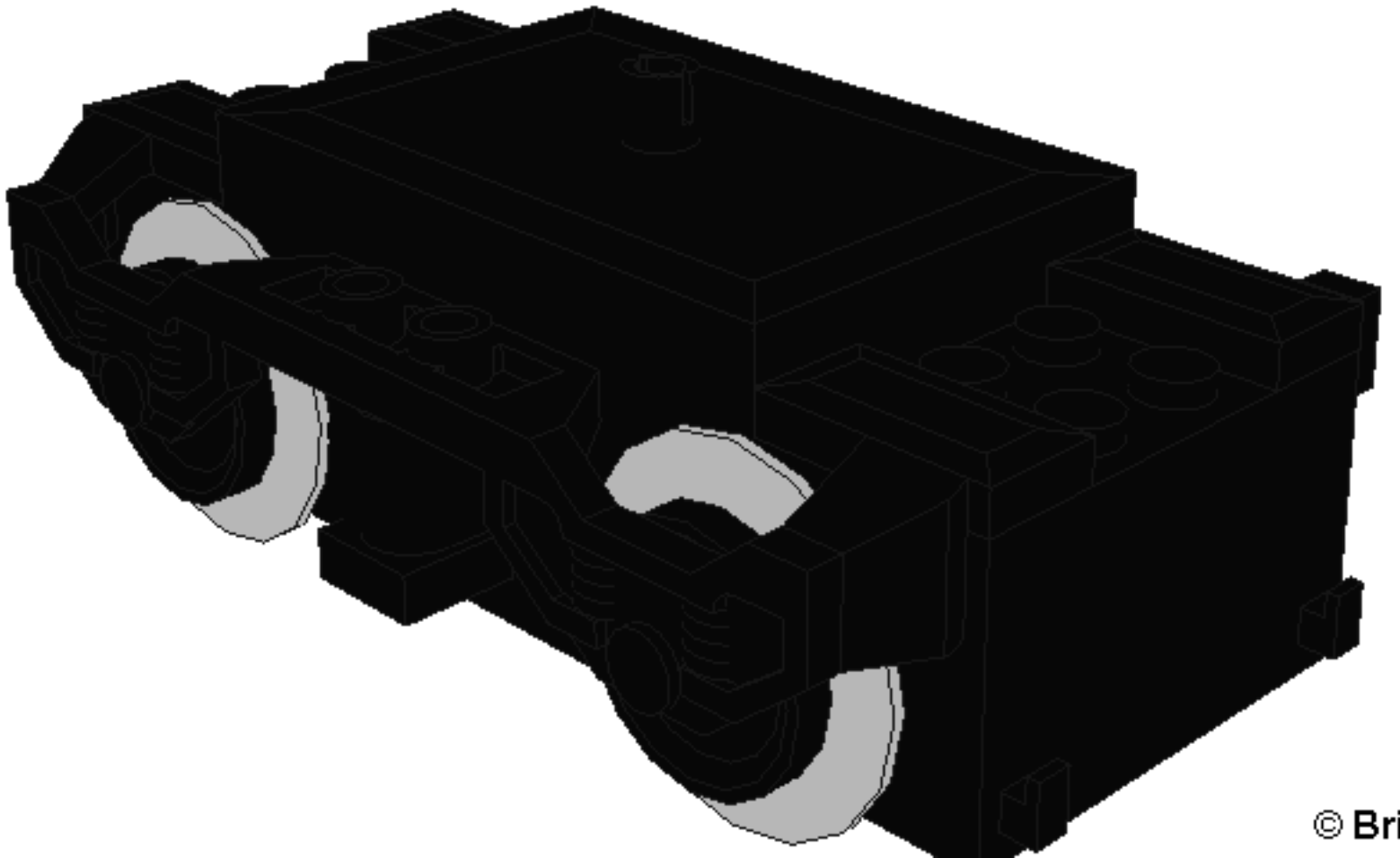

© Brickbuilder - 2006

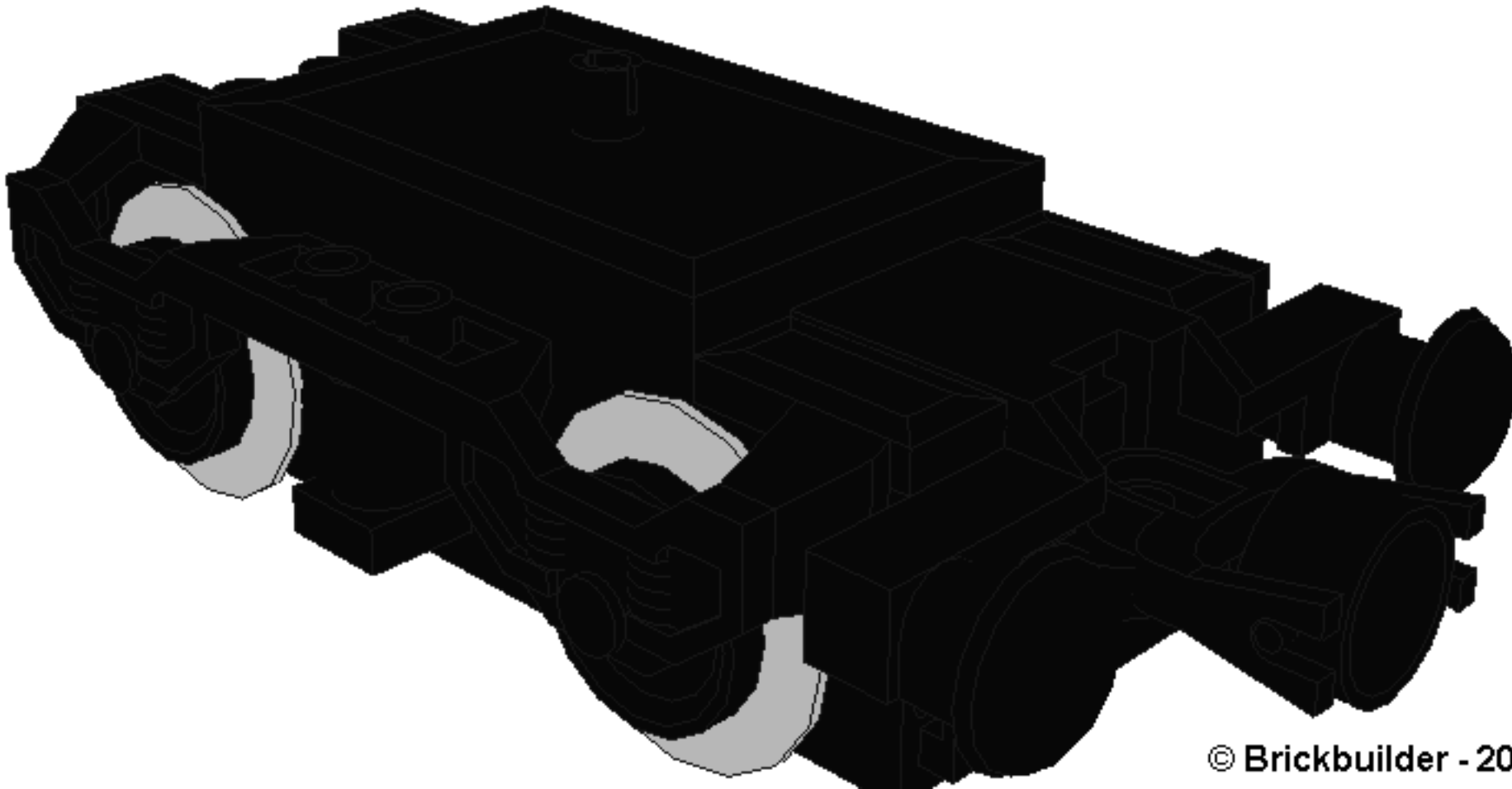

© Brickbuilder - 2006

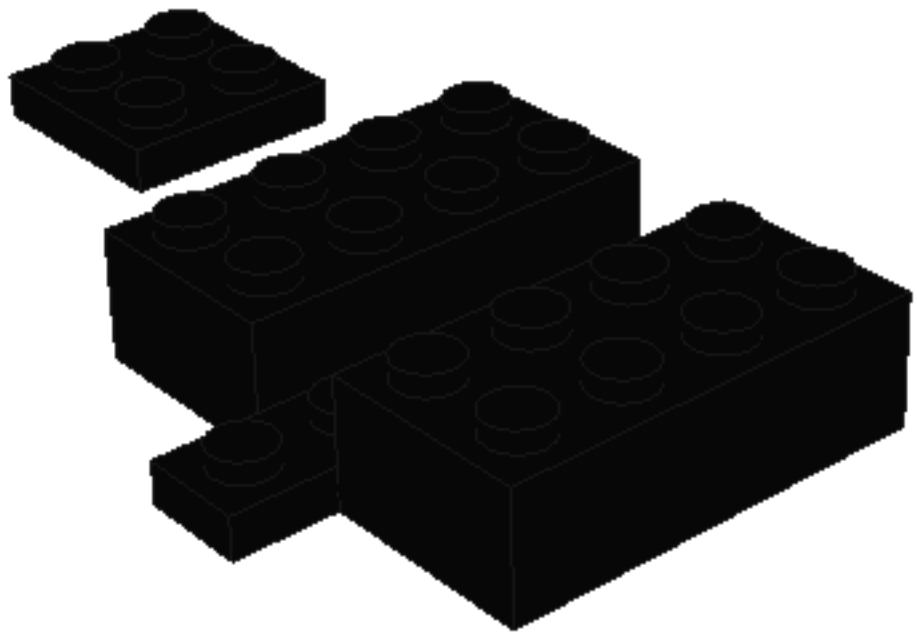

© Brickbuilder - 2006

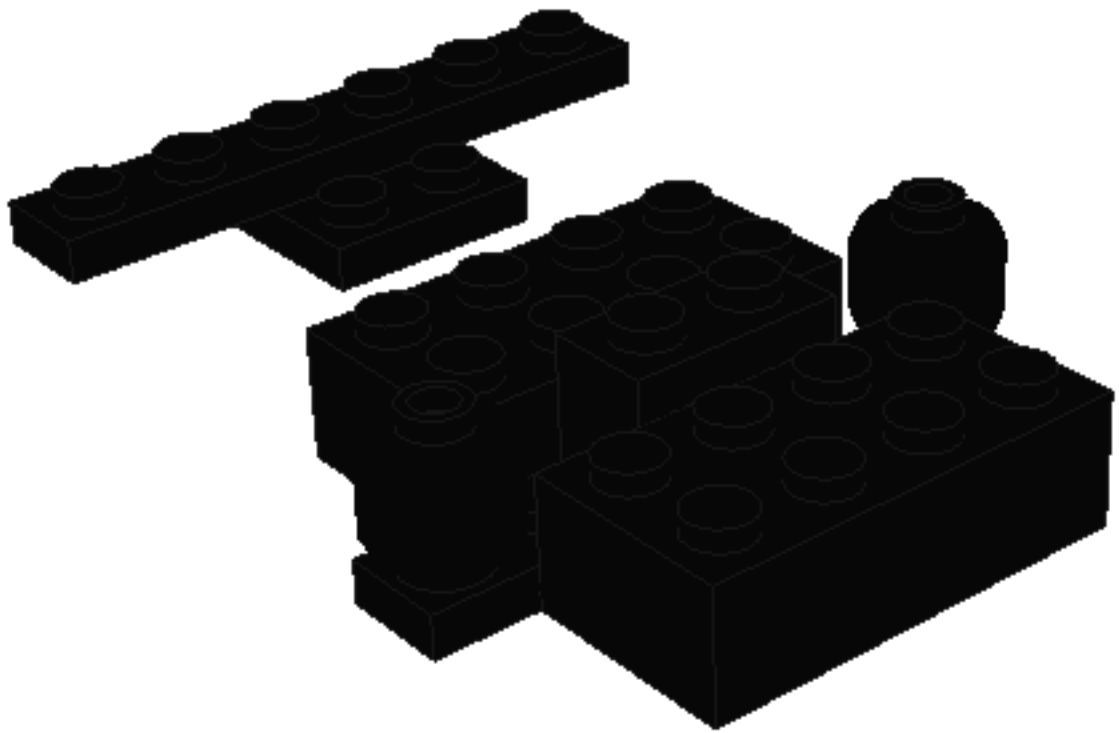

© Brickbuilder - 2006

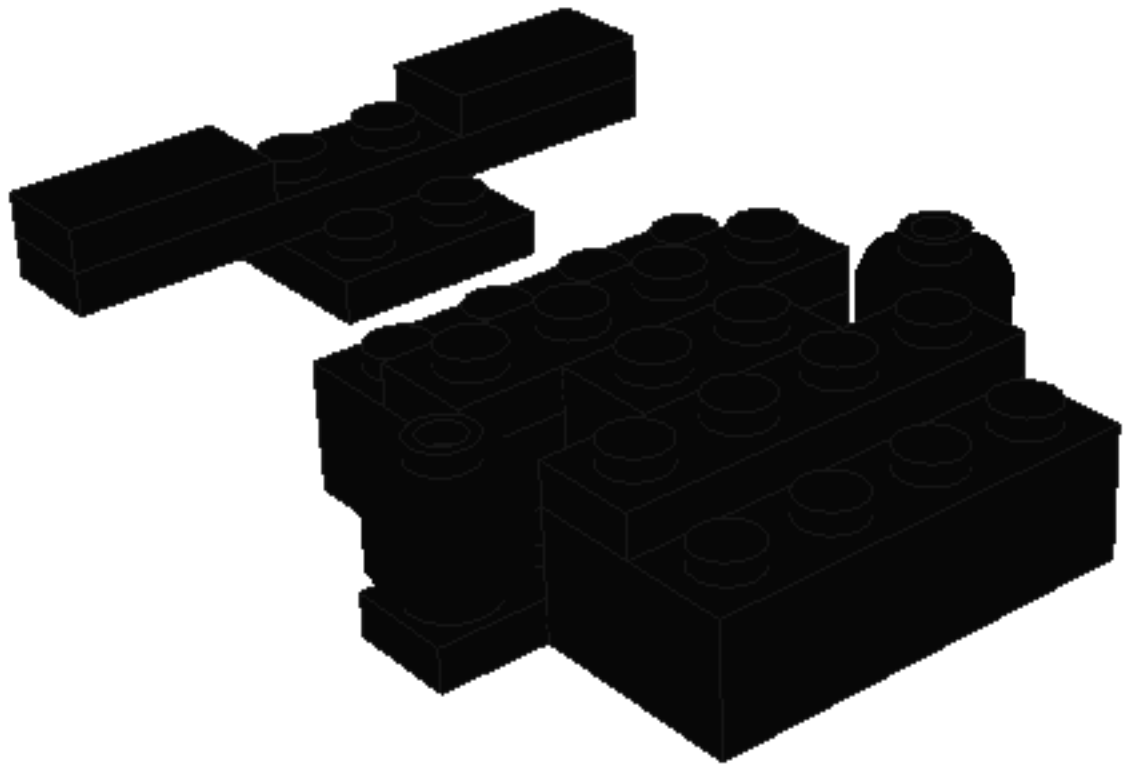

© Brickbuilder - 2006

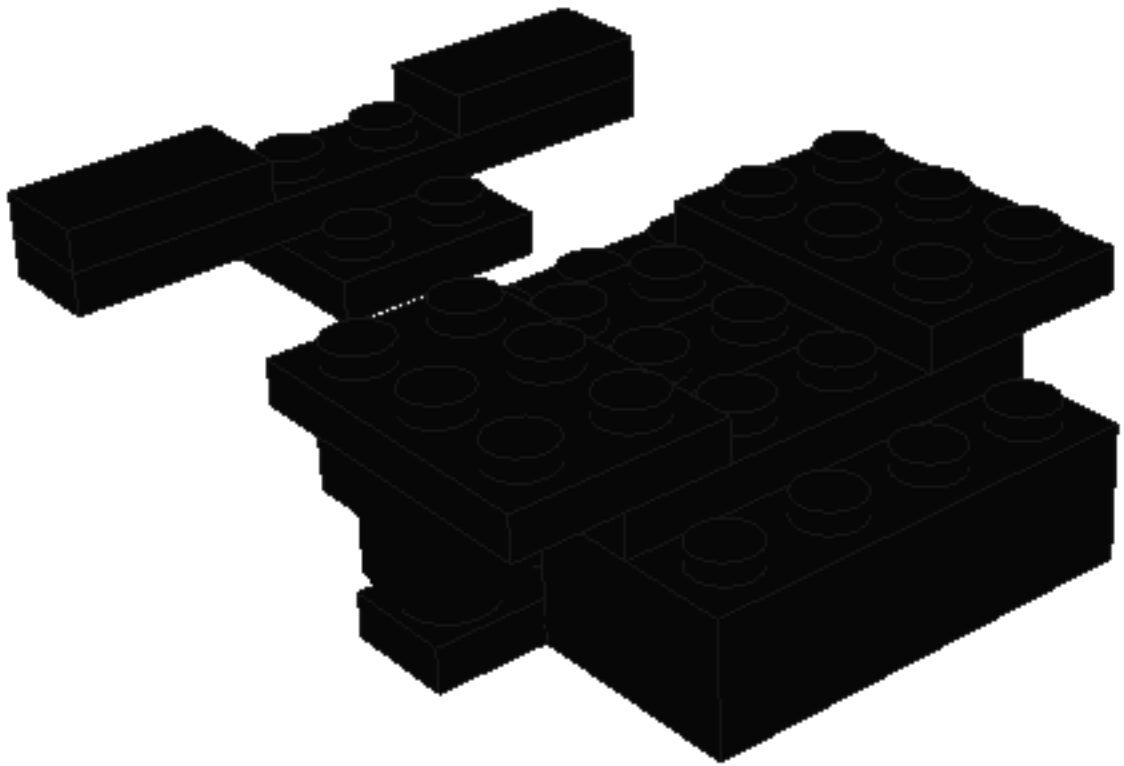

© Brickbuilder - 2006

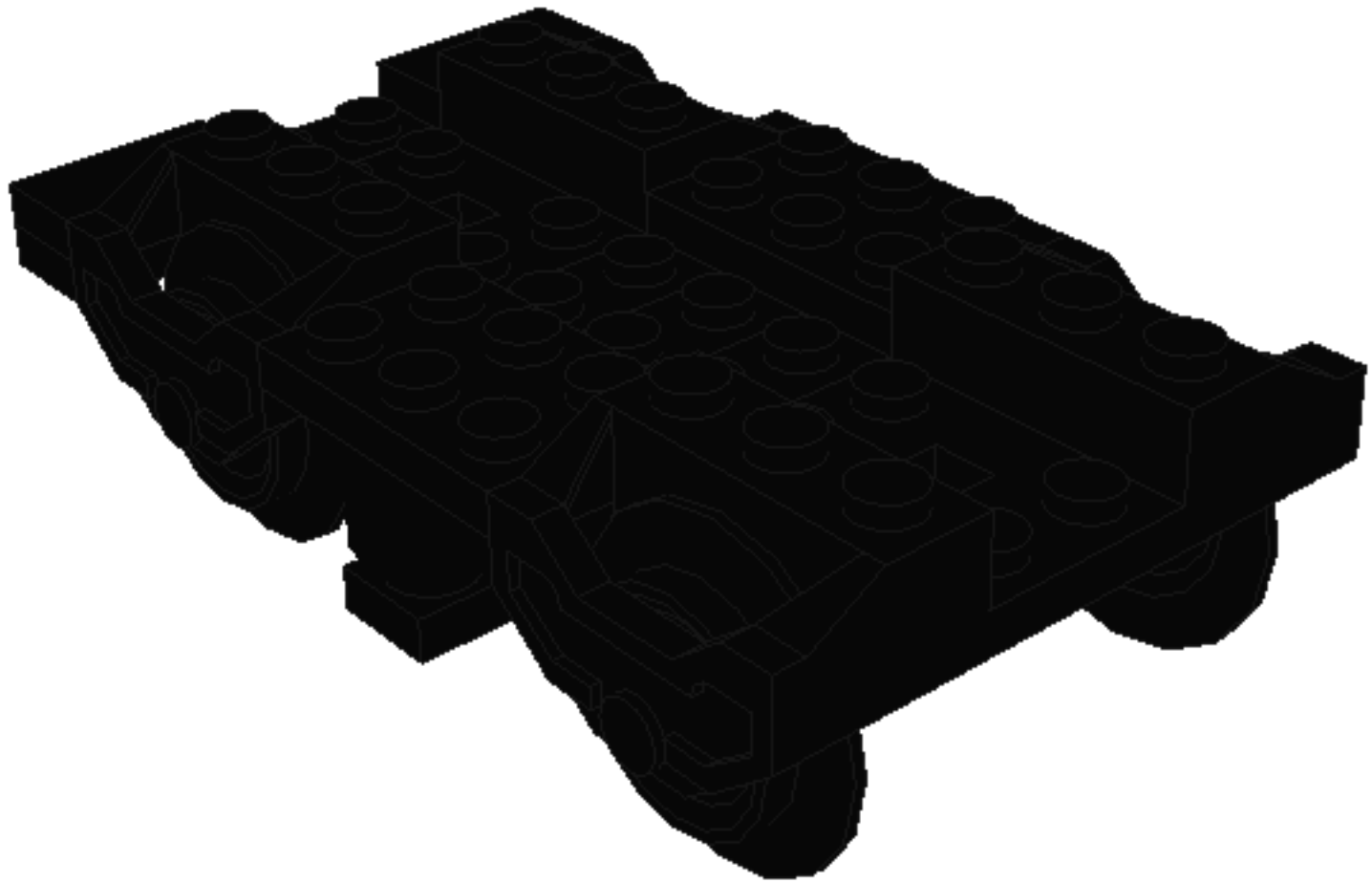

© Brickbuilder - 2006

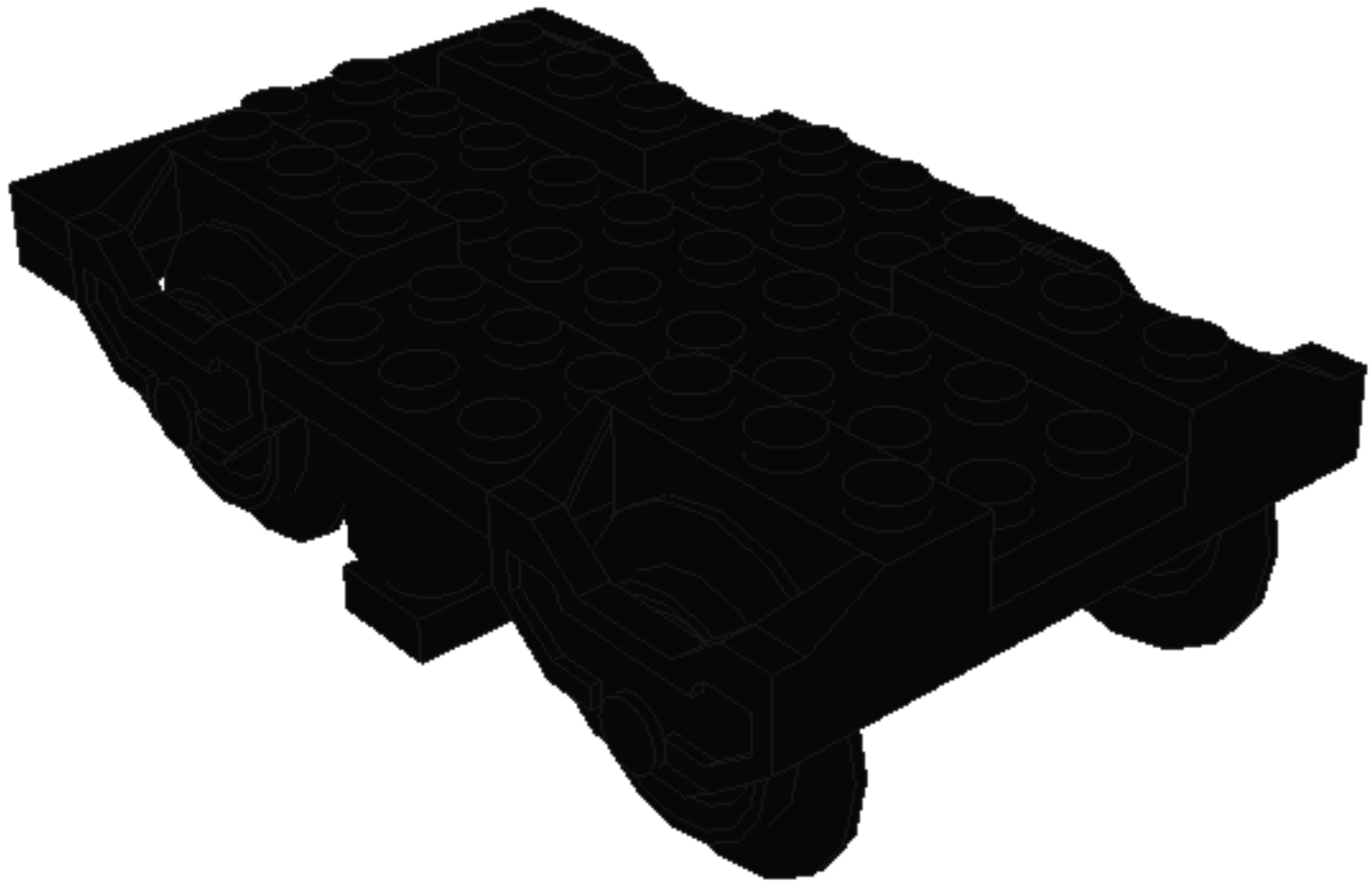

© Brickbuilder - 2006

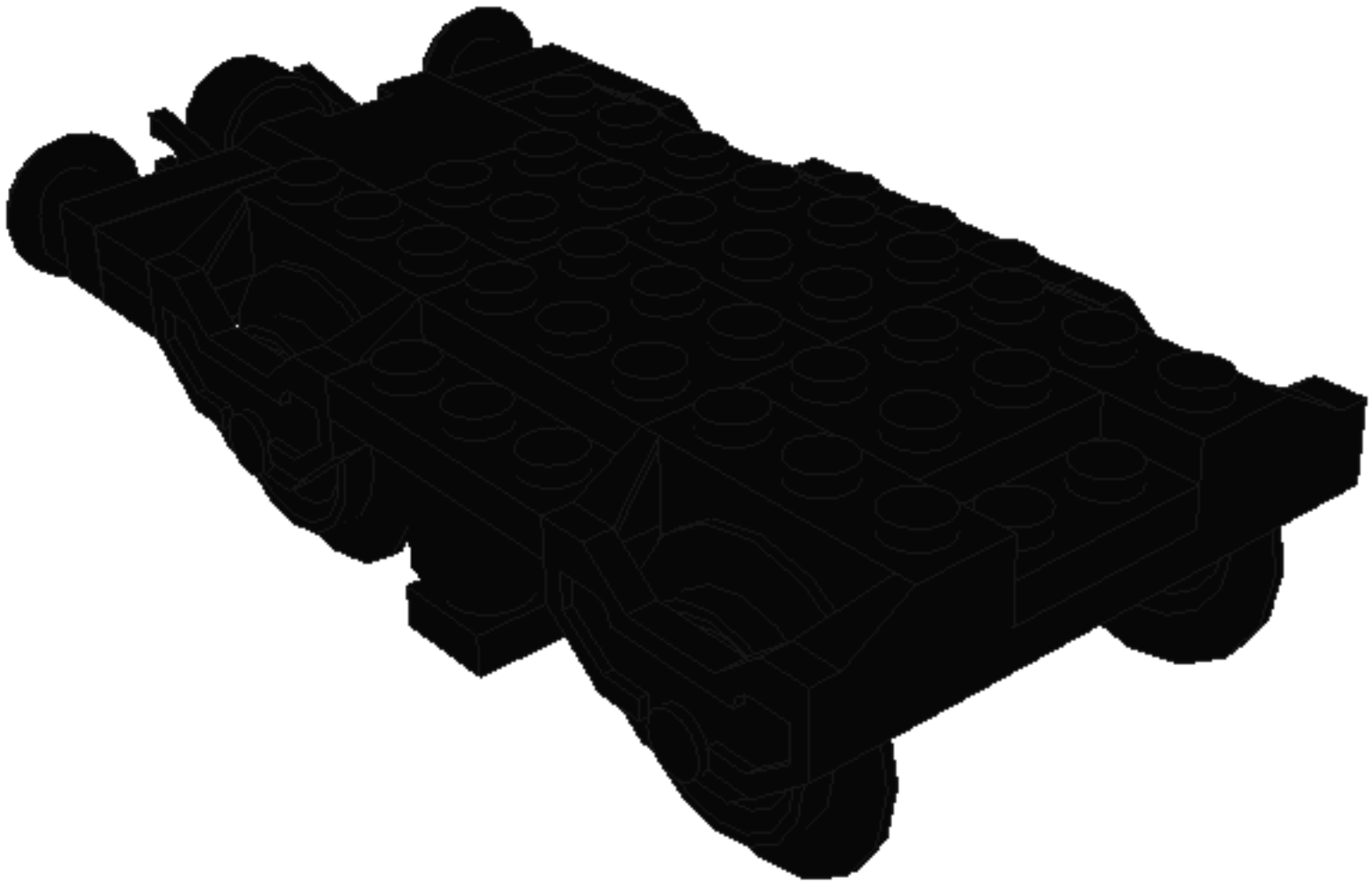

© Brickbuilder - 2006

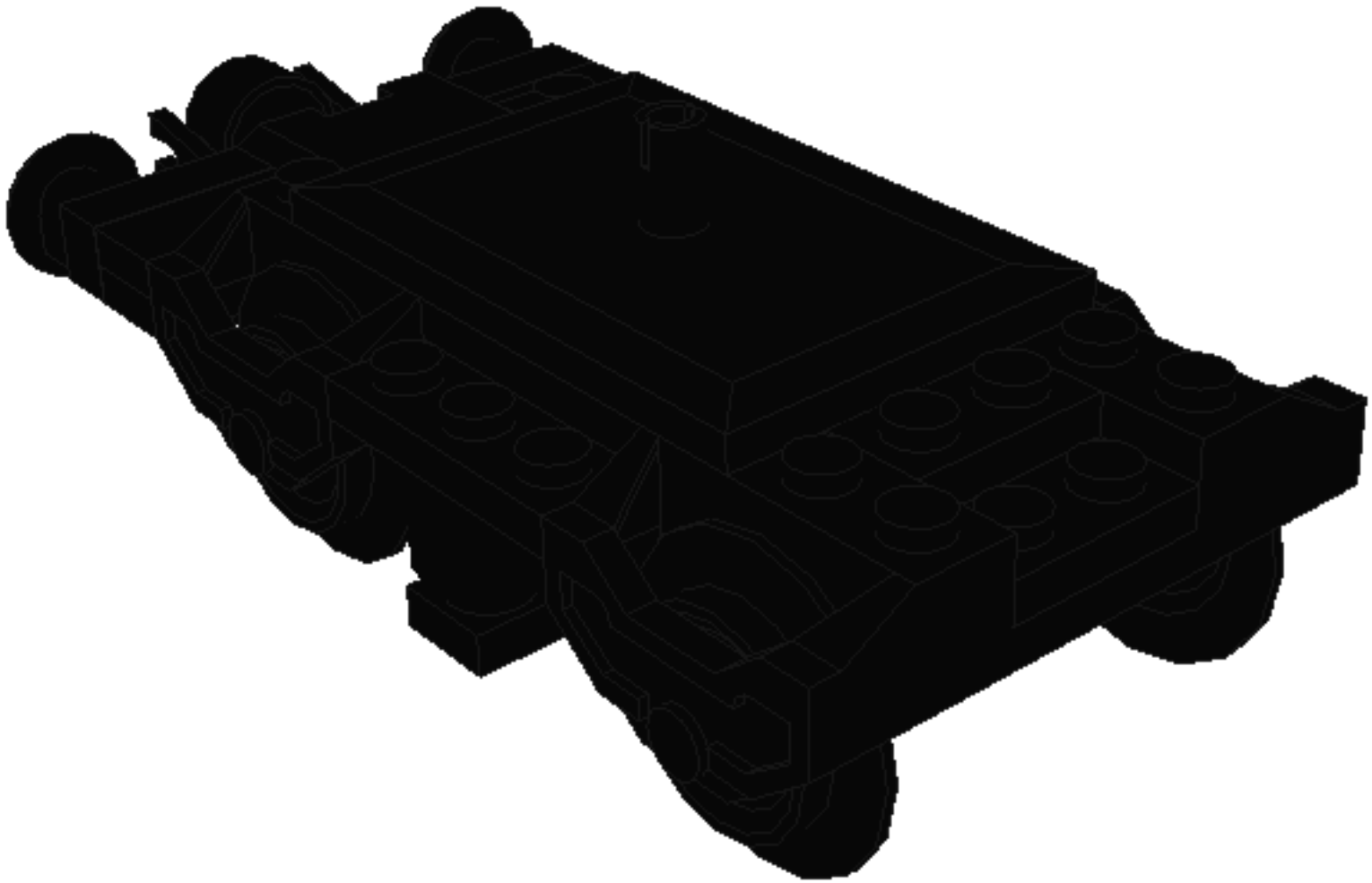

© Brickbuilder - 2006

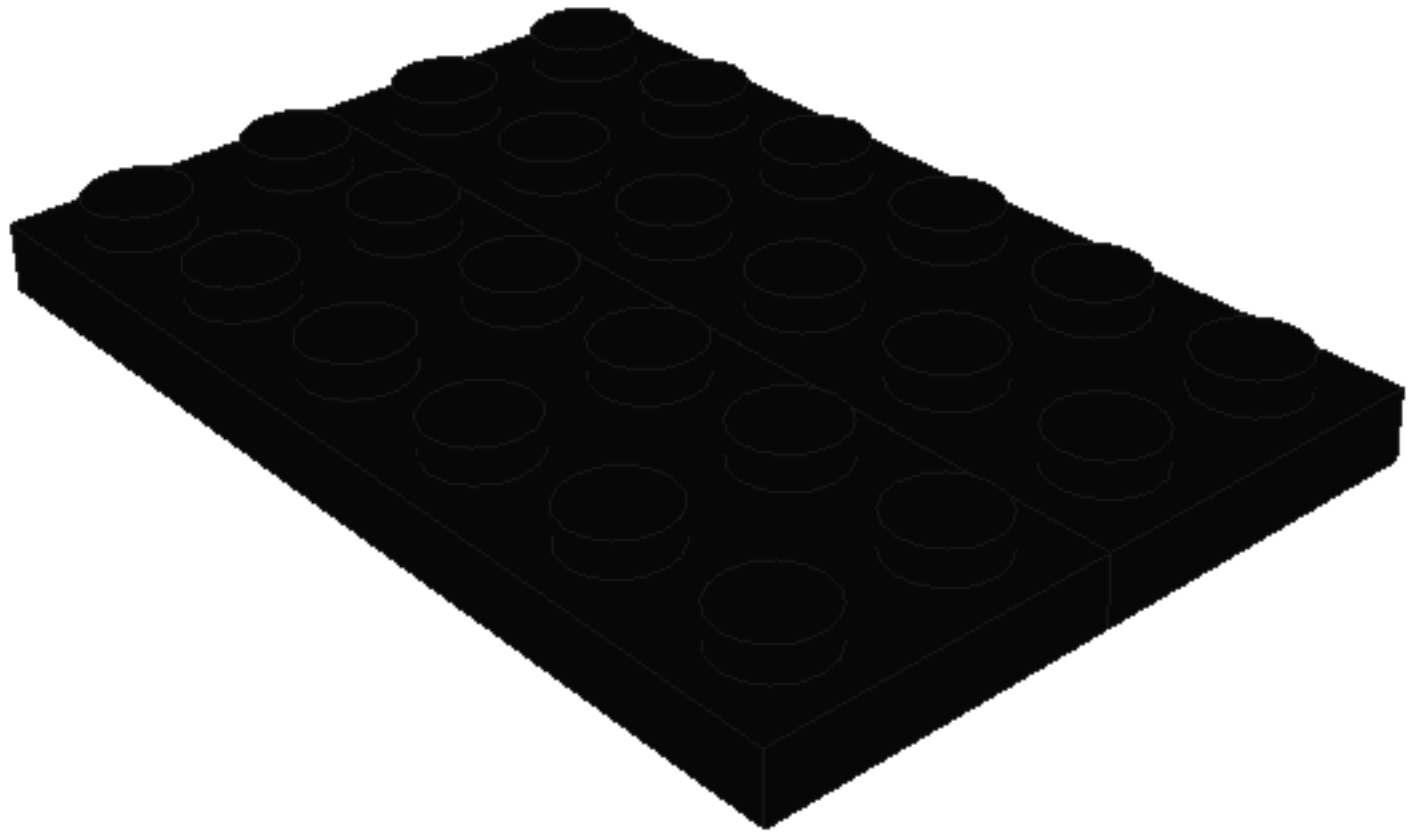

© Brickbuilder - 2006

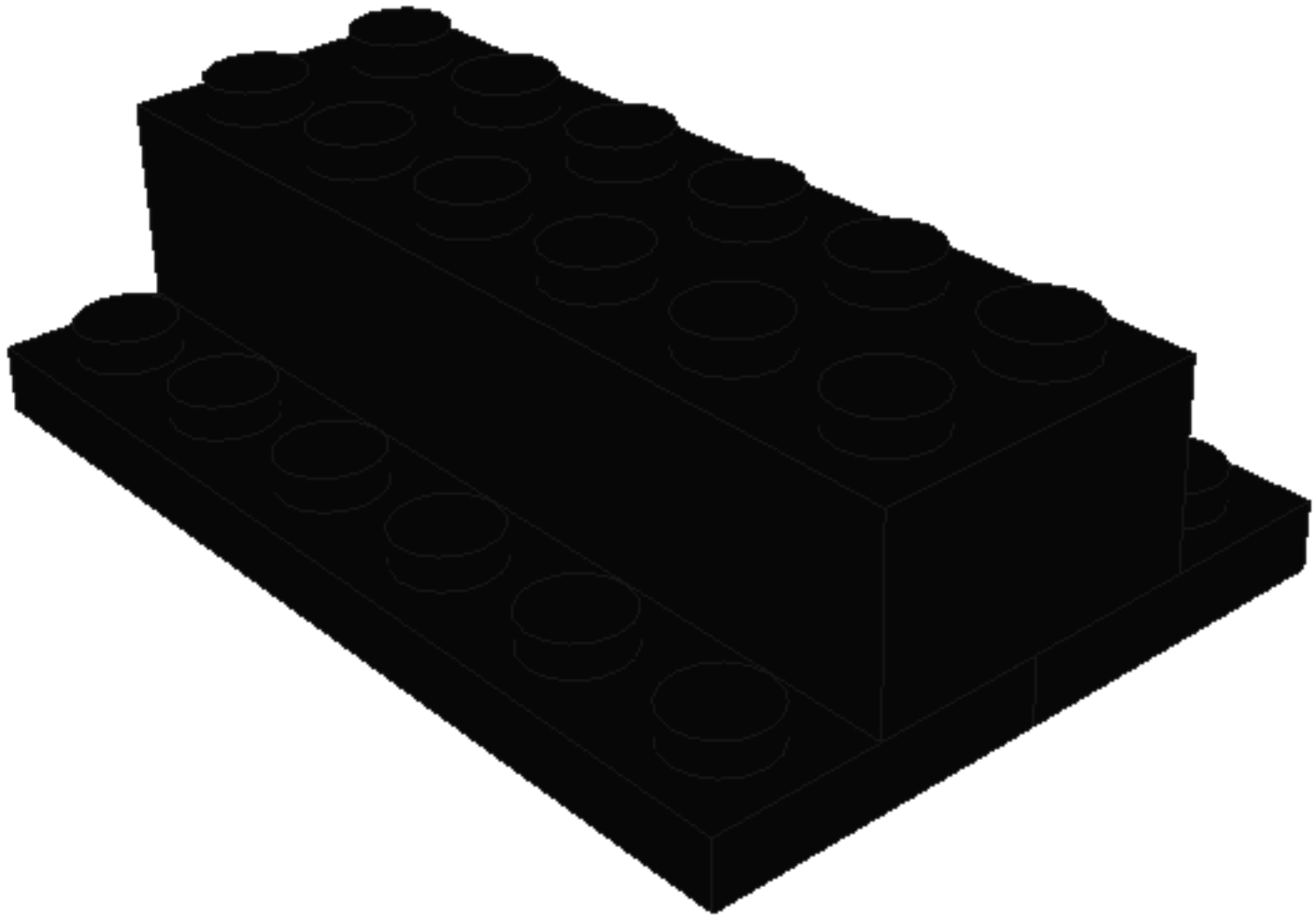

© Brickbuilder - 2006

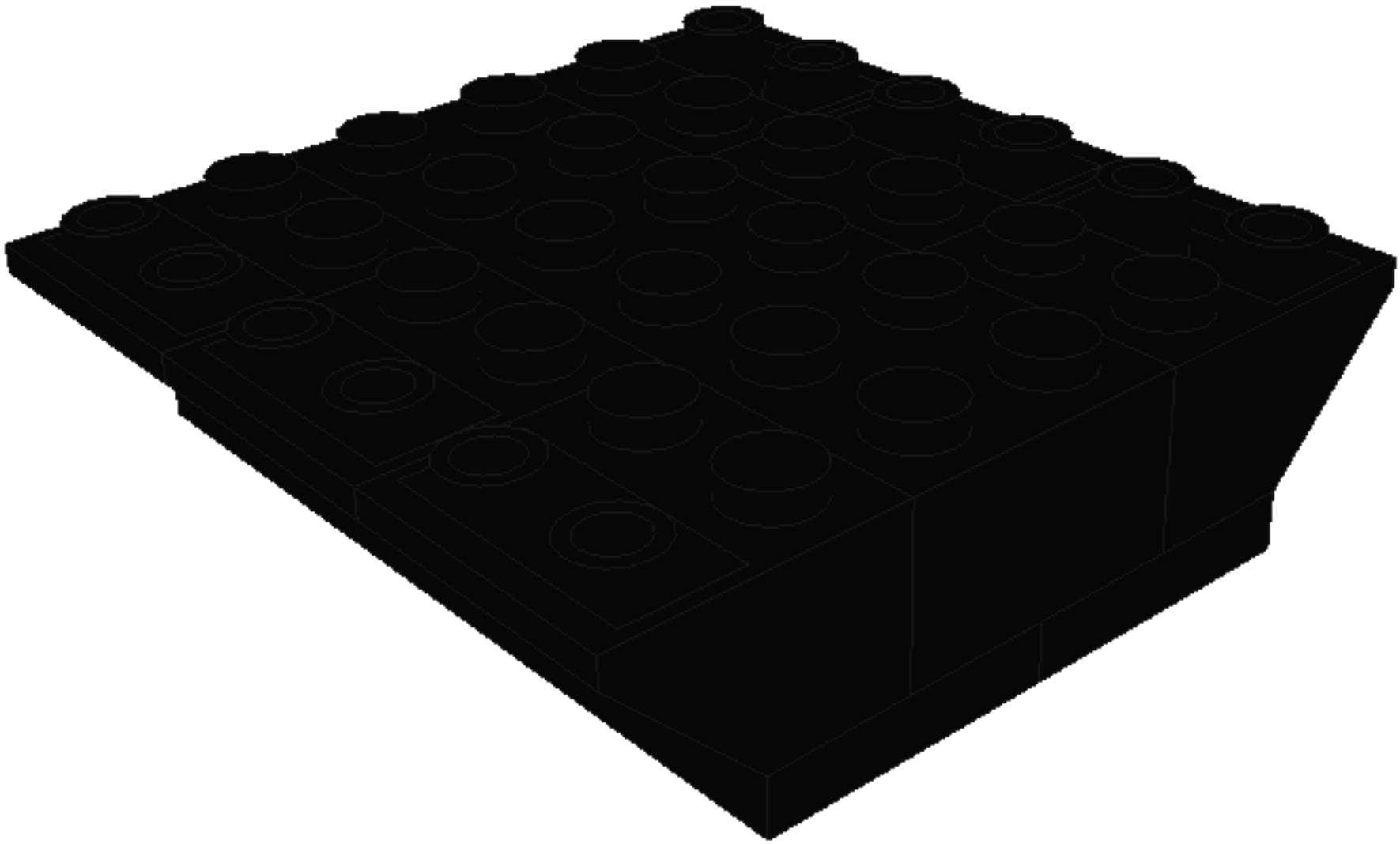

© Brickbuilder - 2006

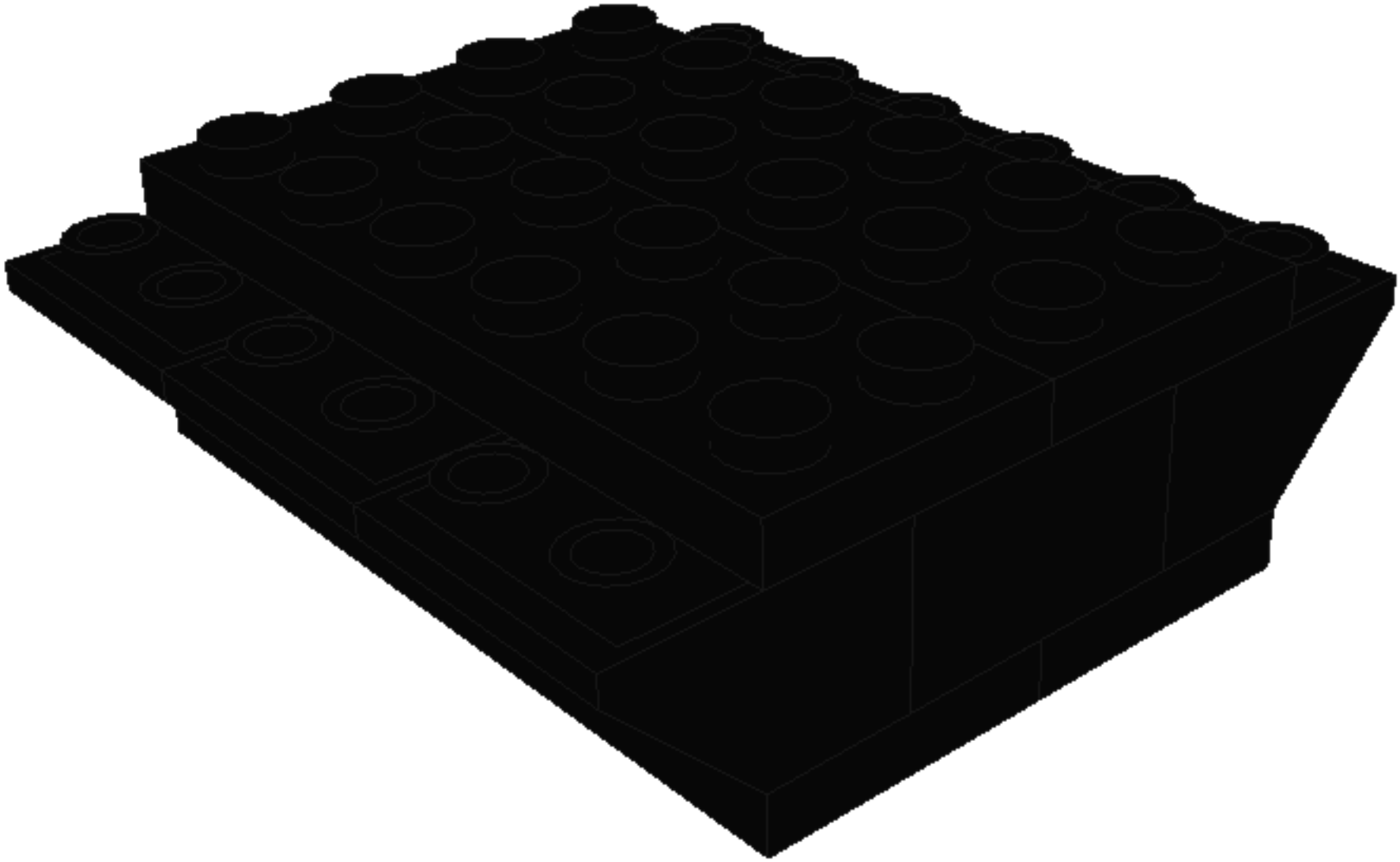

© Brickbuilder - 2006

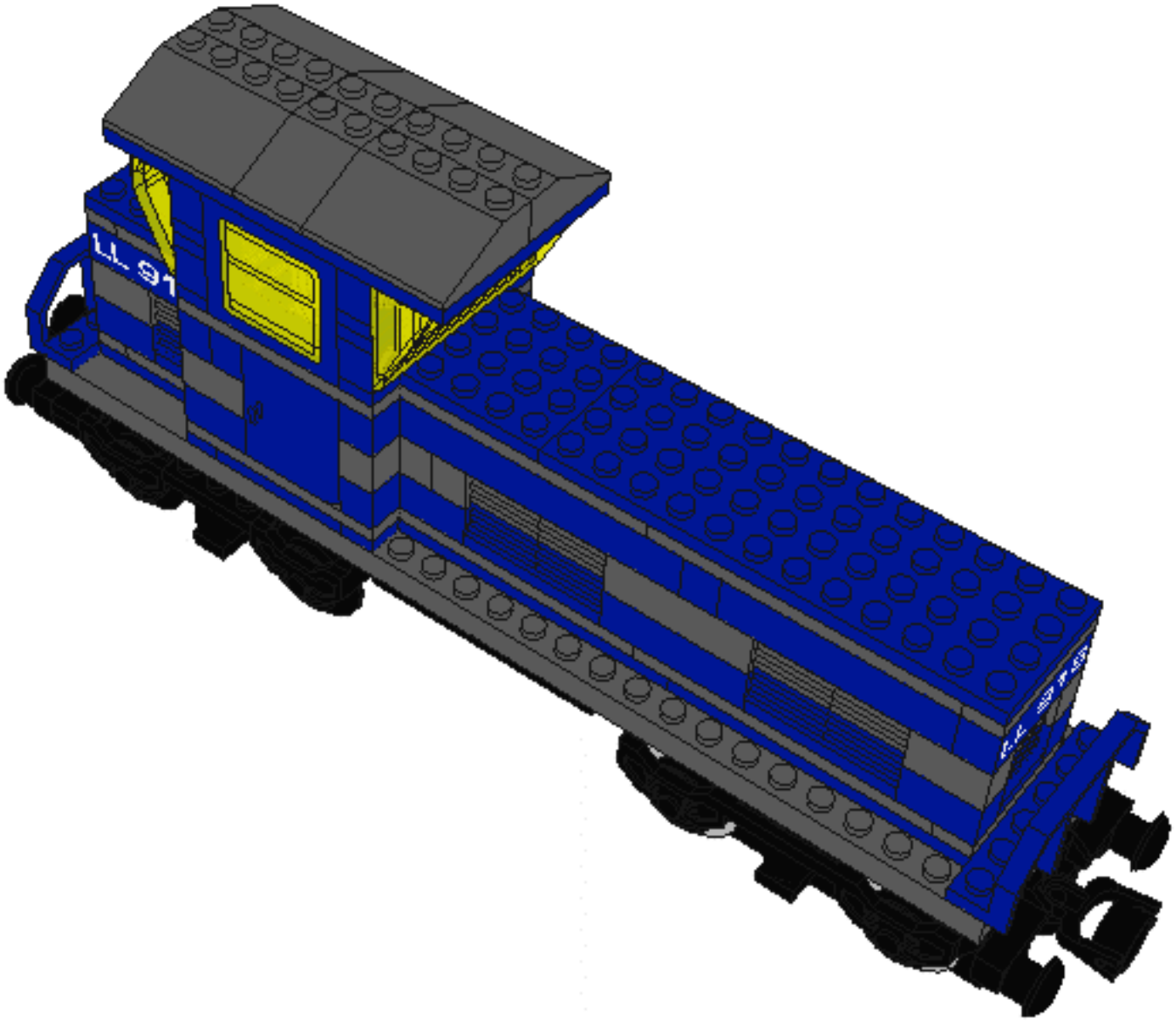

© Brickbuilder - 2006