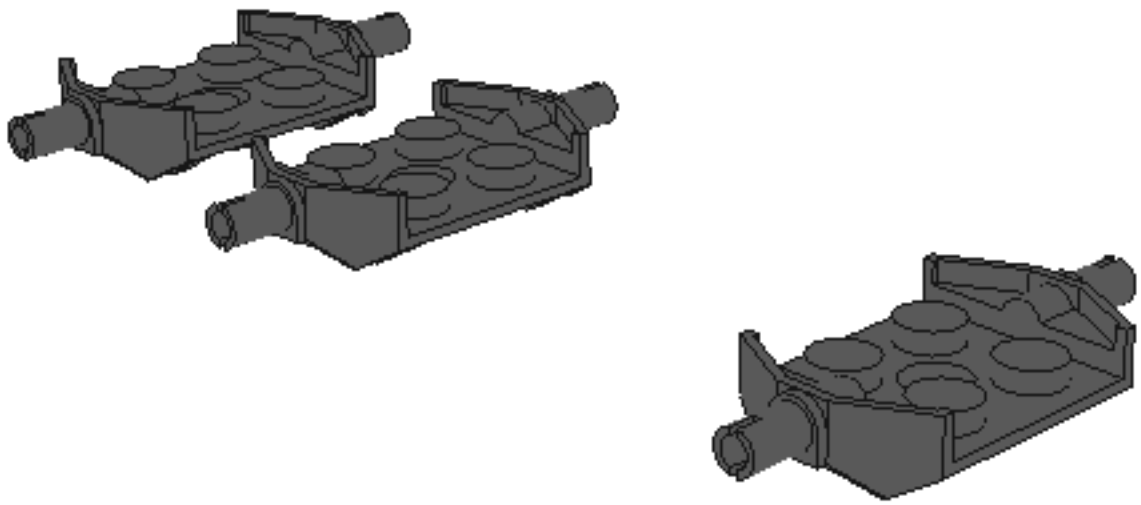

© Brickbuilder - 2006

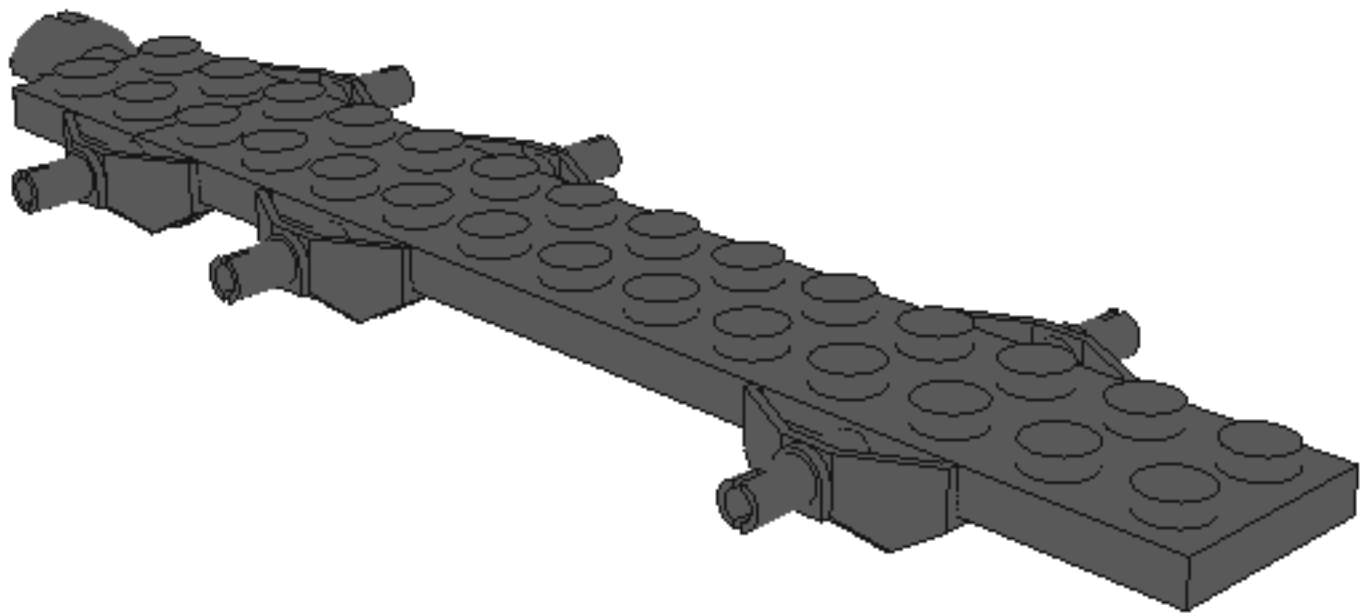

© Brickbuilder - 2006

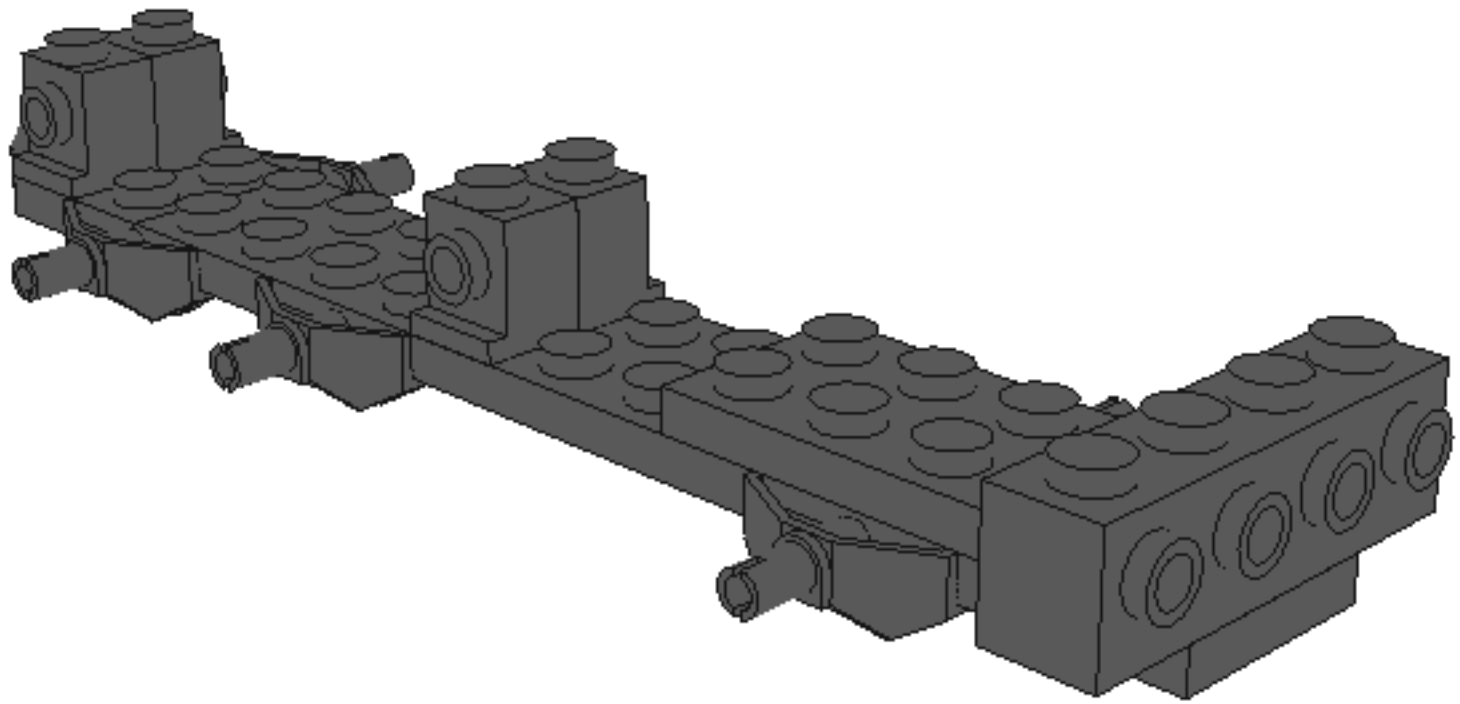

© Brickbuilder - 2006

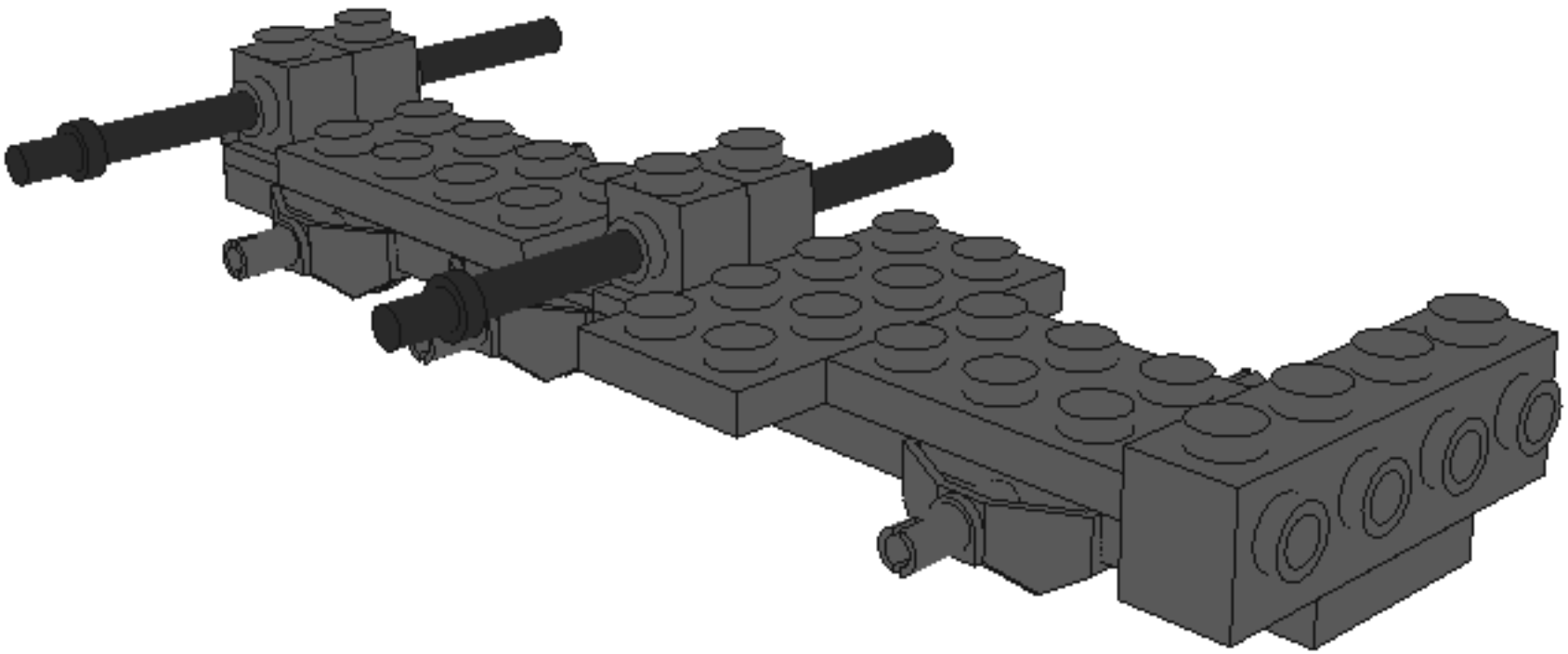

© Brickbuilder - 2006

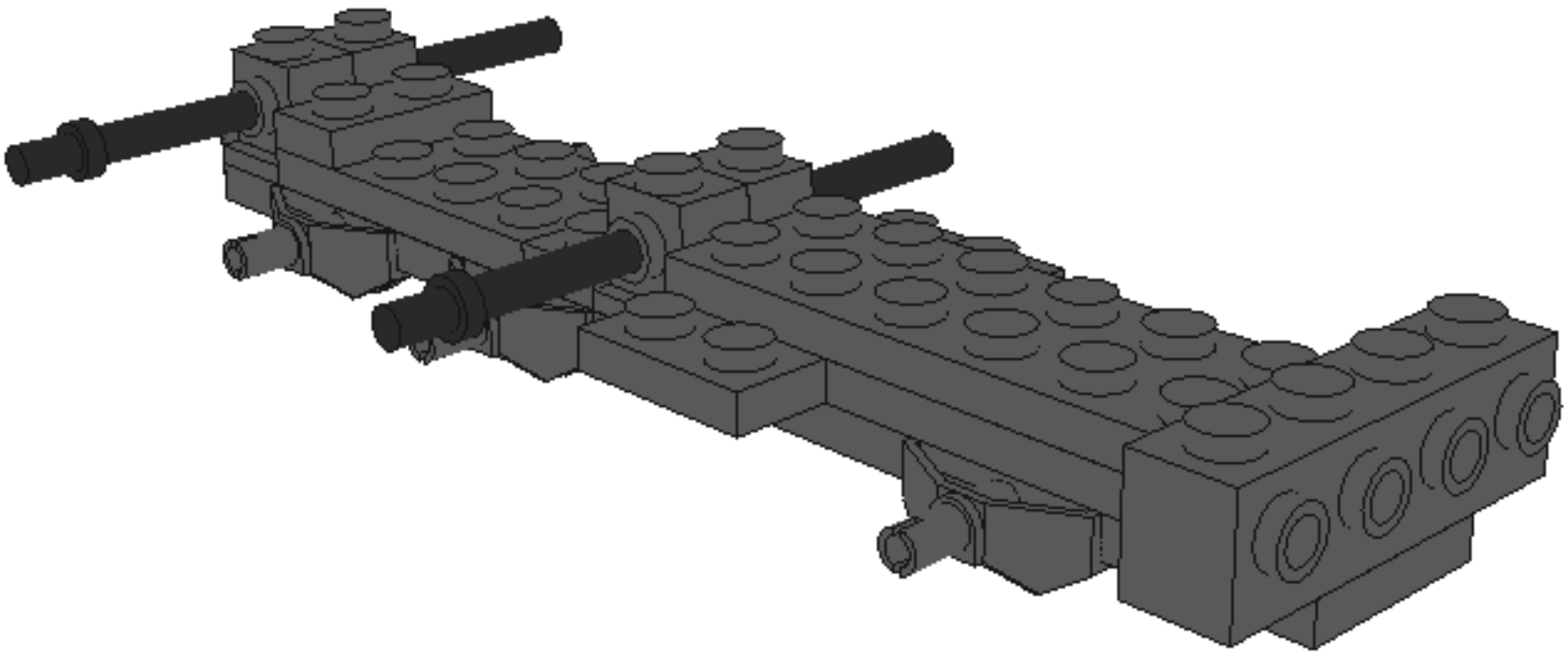

© Brickbuilder - 2006

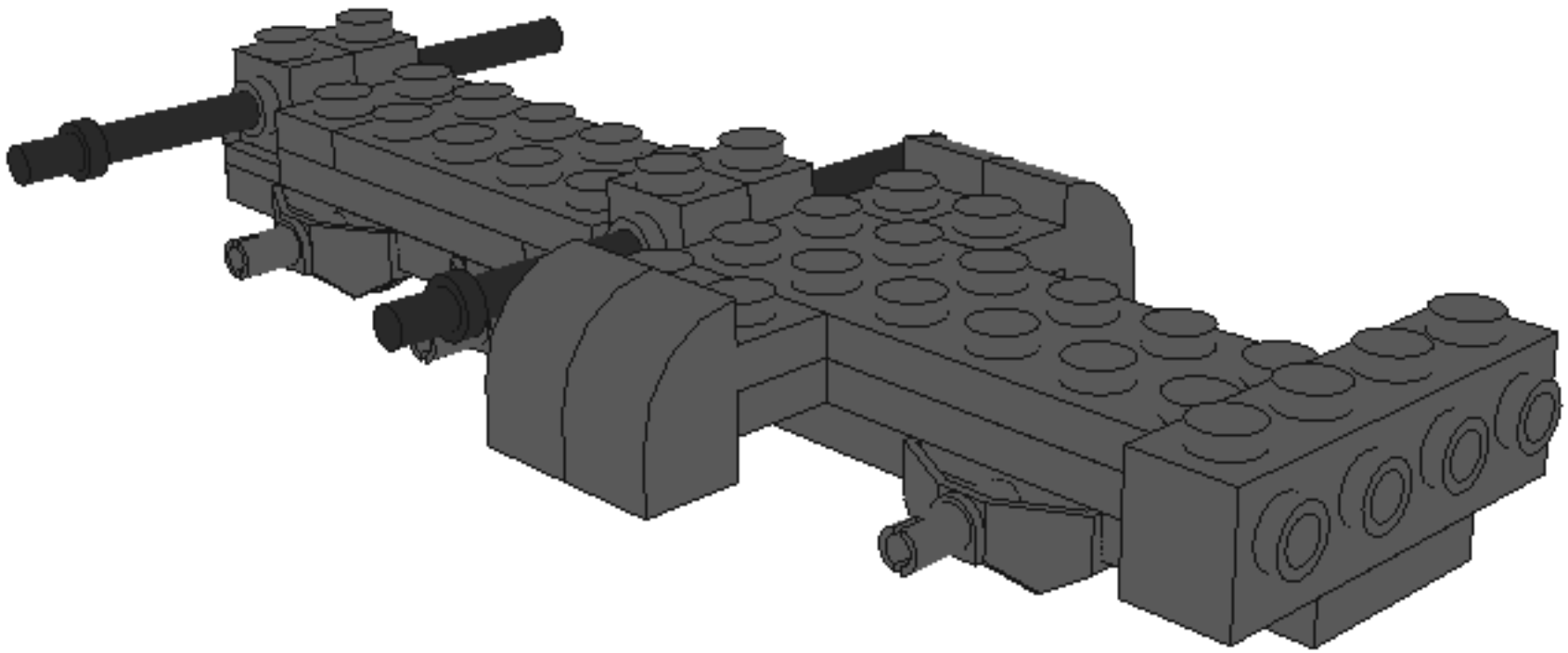

© Brickbuilder - 2006

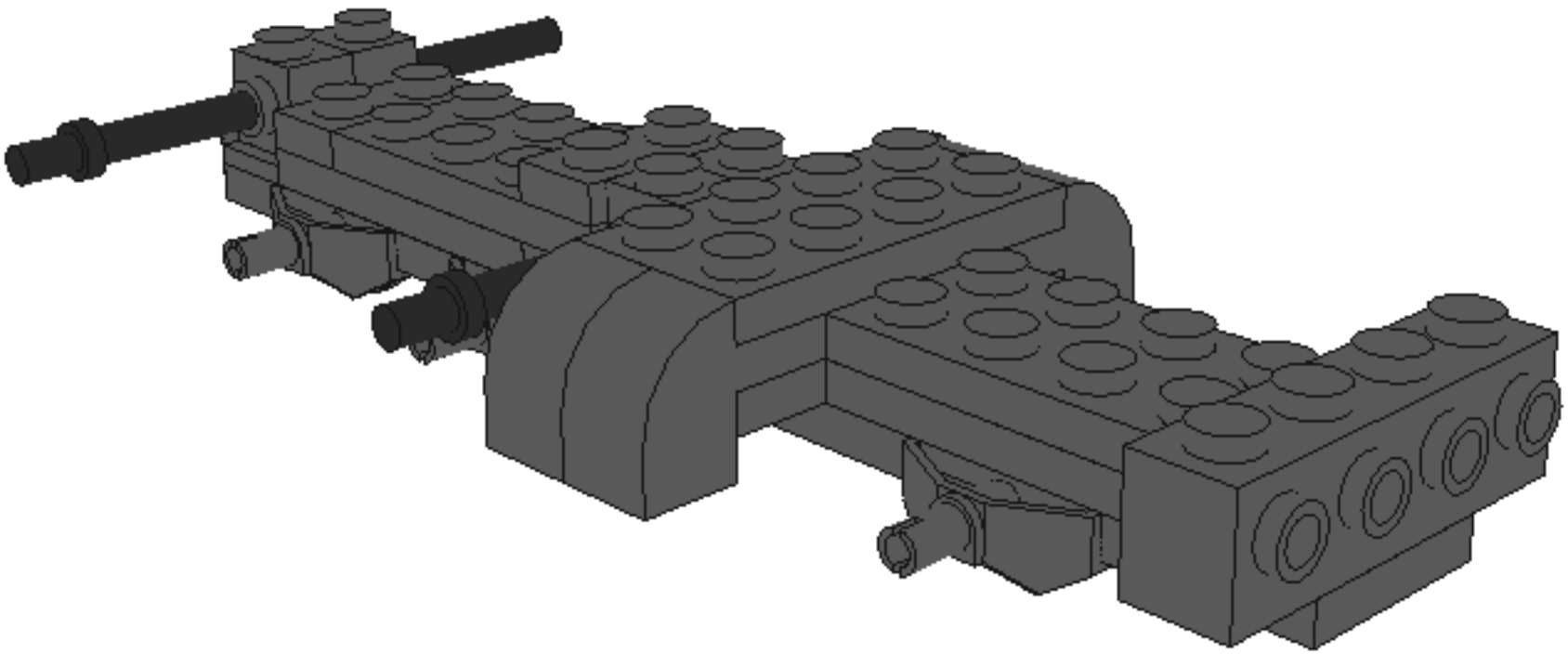

© Brickbuilder - 2006

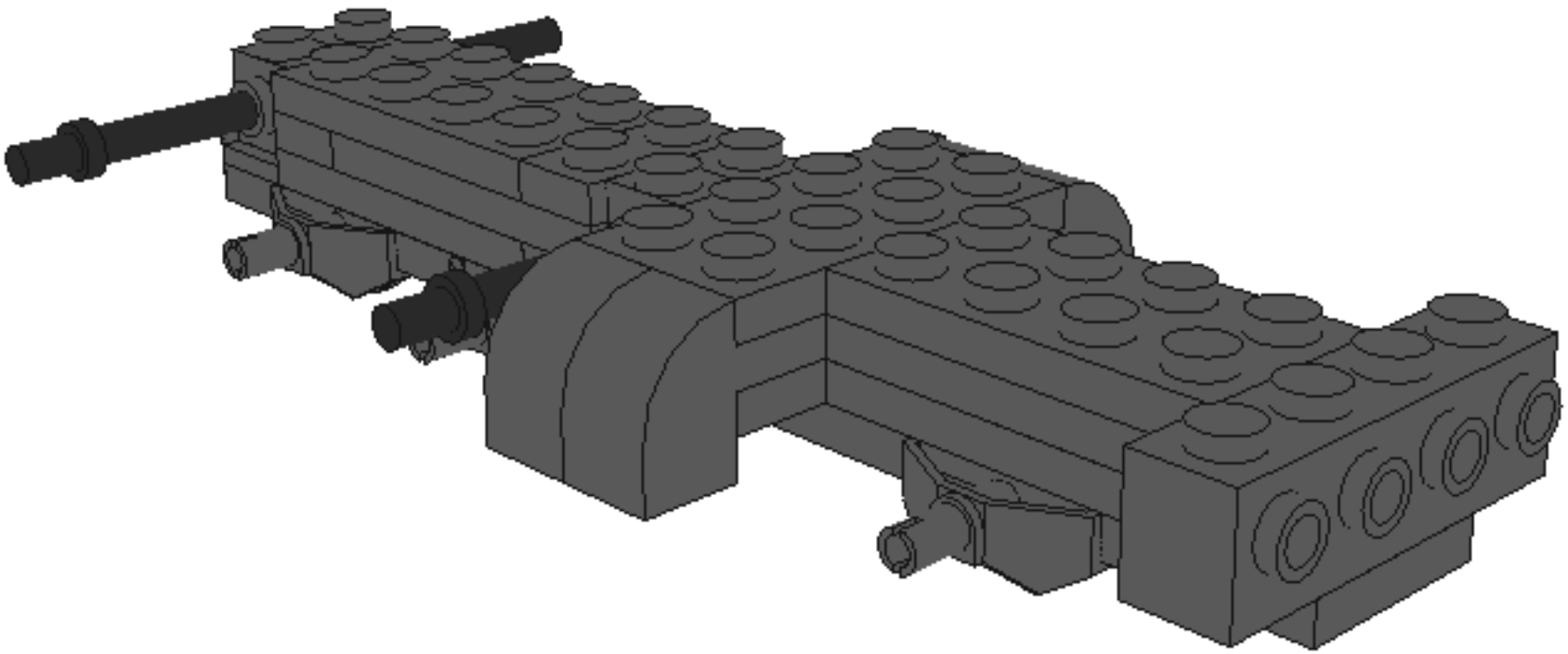

© Brickbuilder - 2006

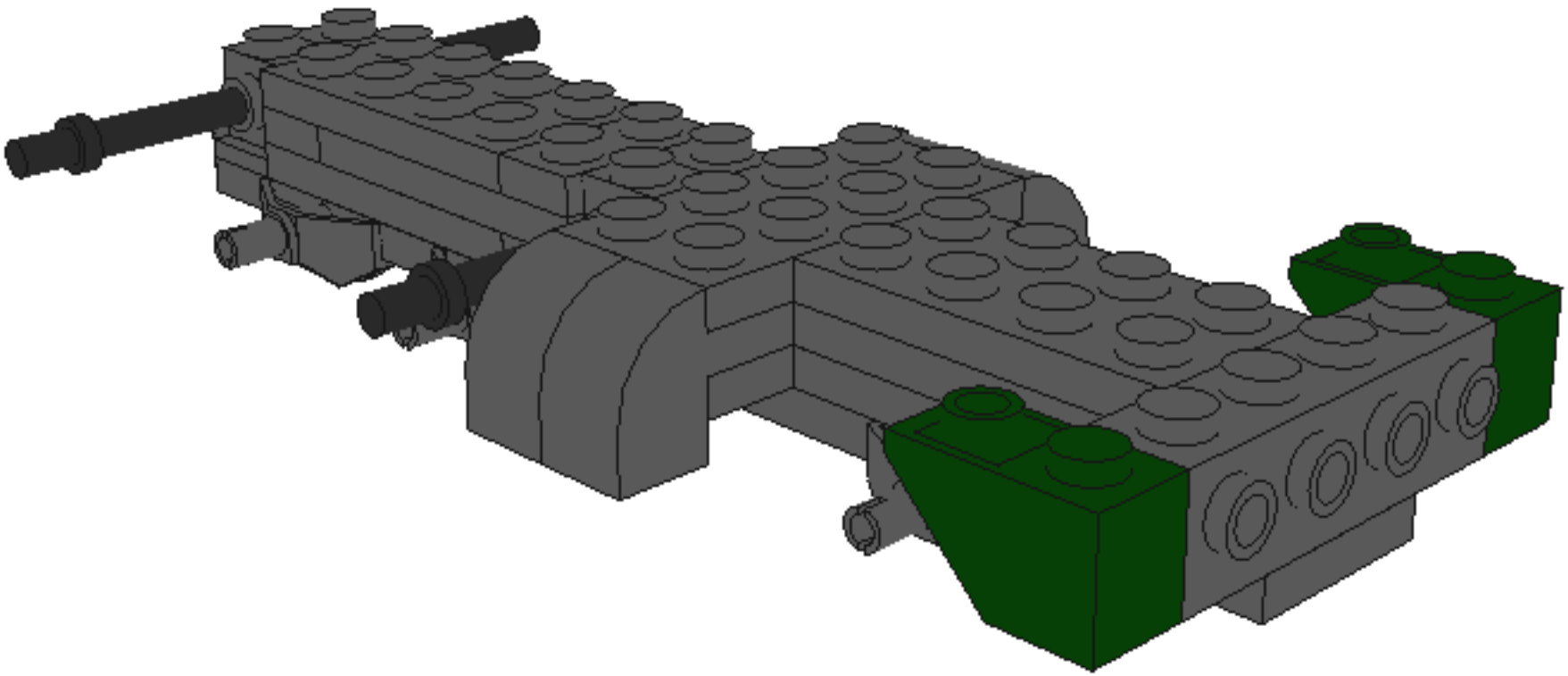

© Brickbuilder - 2006

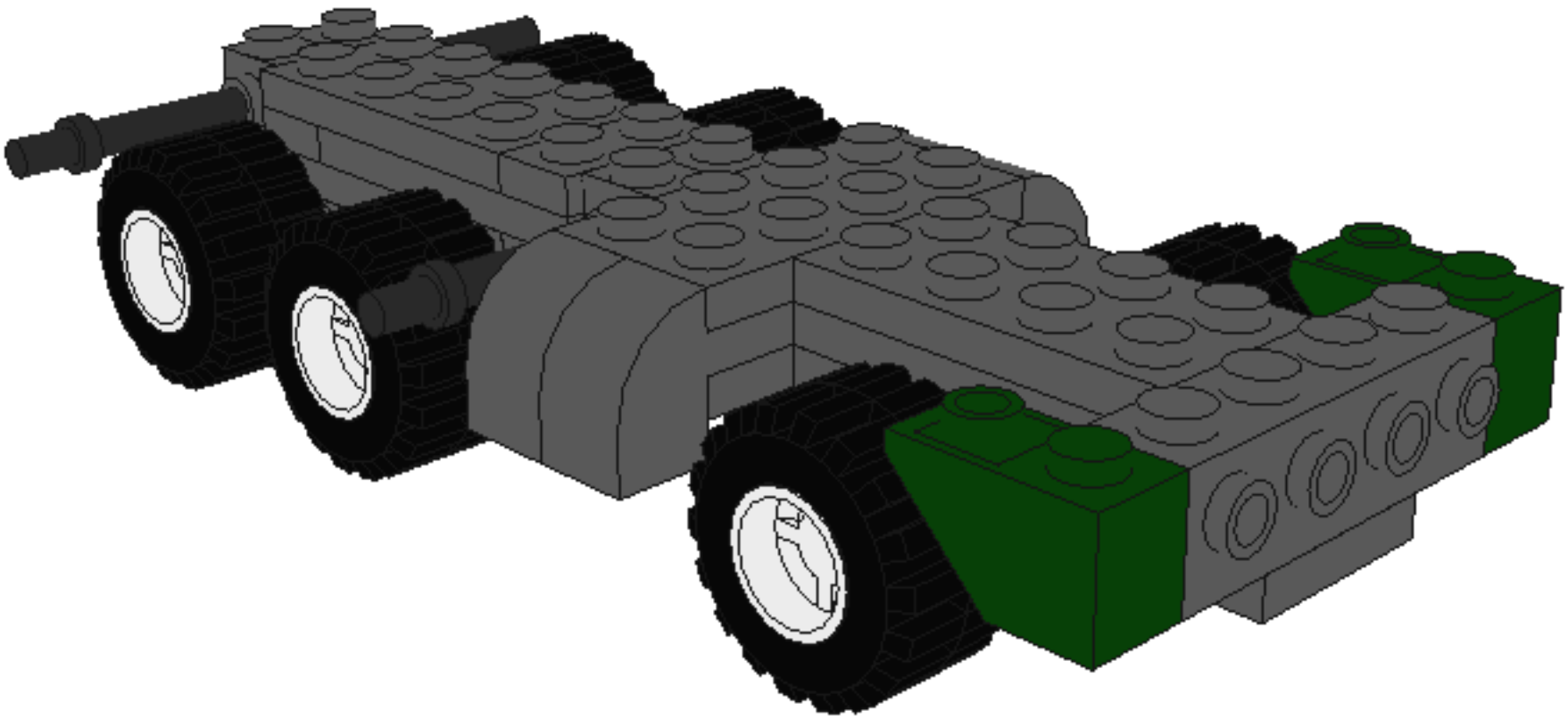

© Brickbuilder - 2006

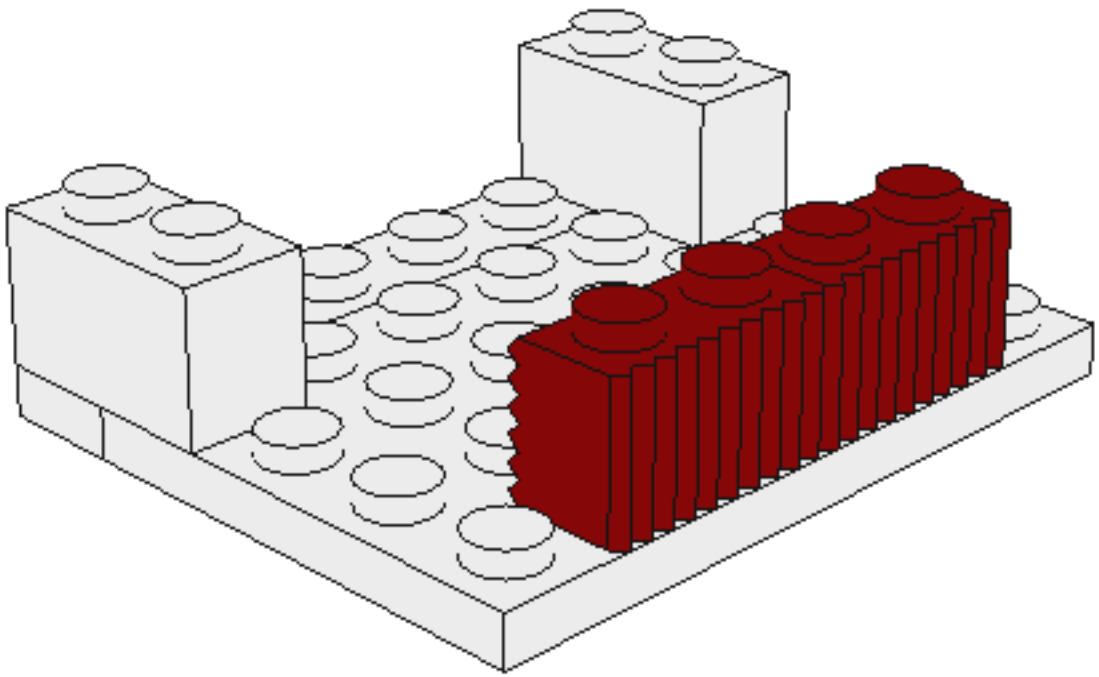

© Brickbuilder - 2006

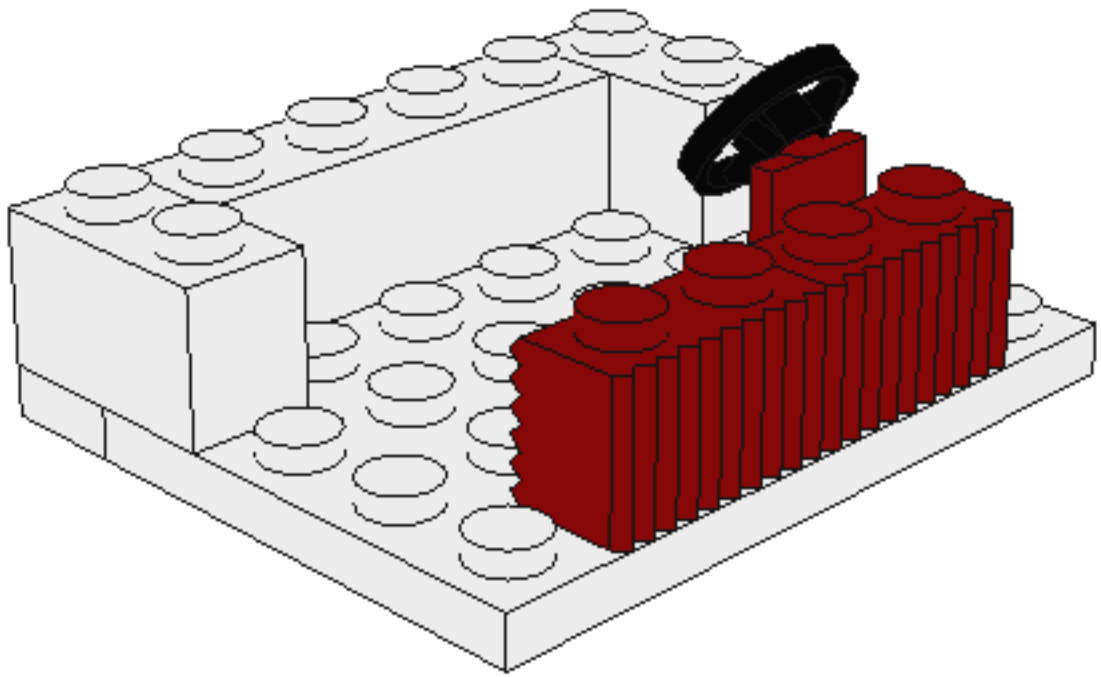

© Brickbuilder - 2006

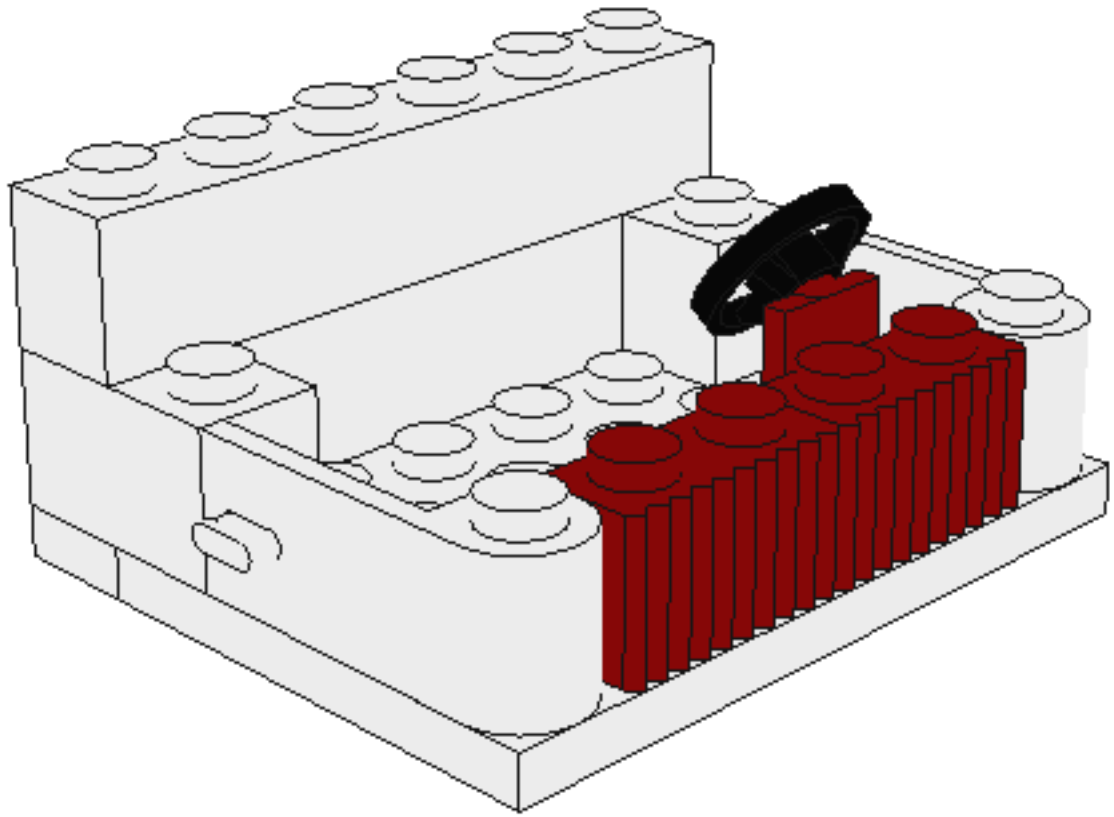

© Brickbuilder - 2006

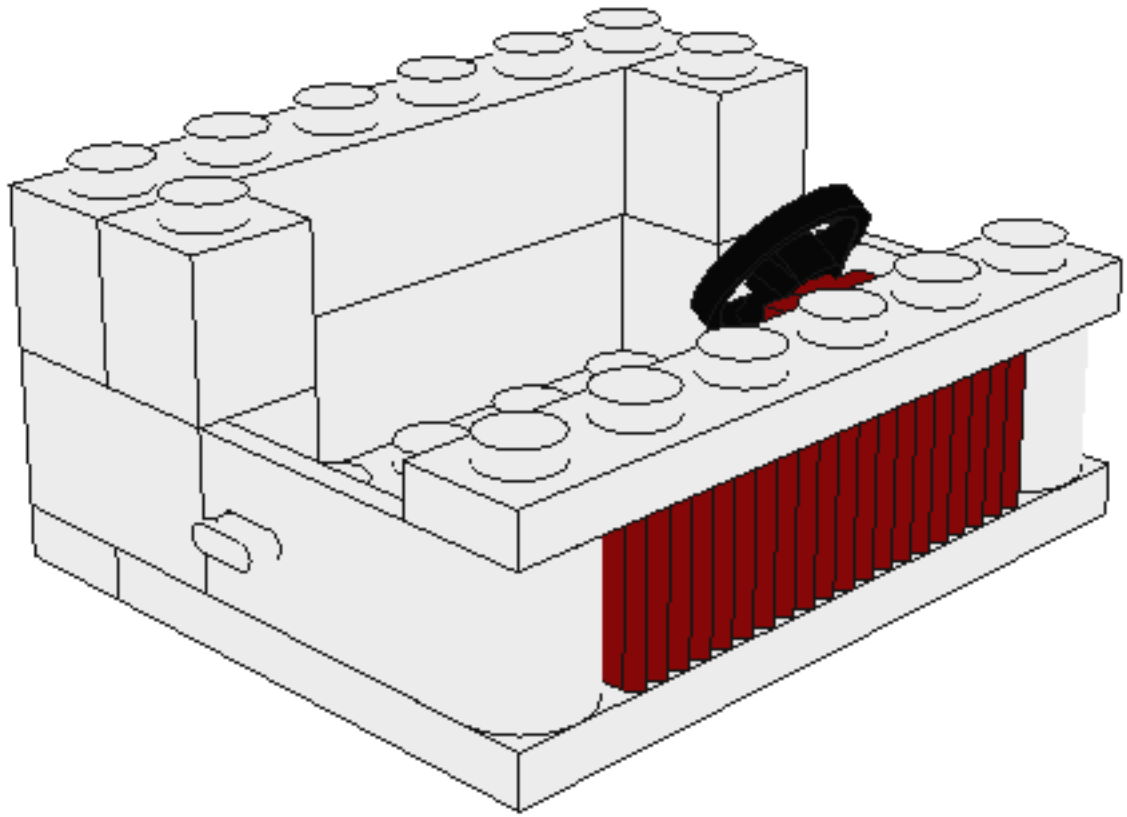

© Brickbuilder - 2006

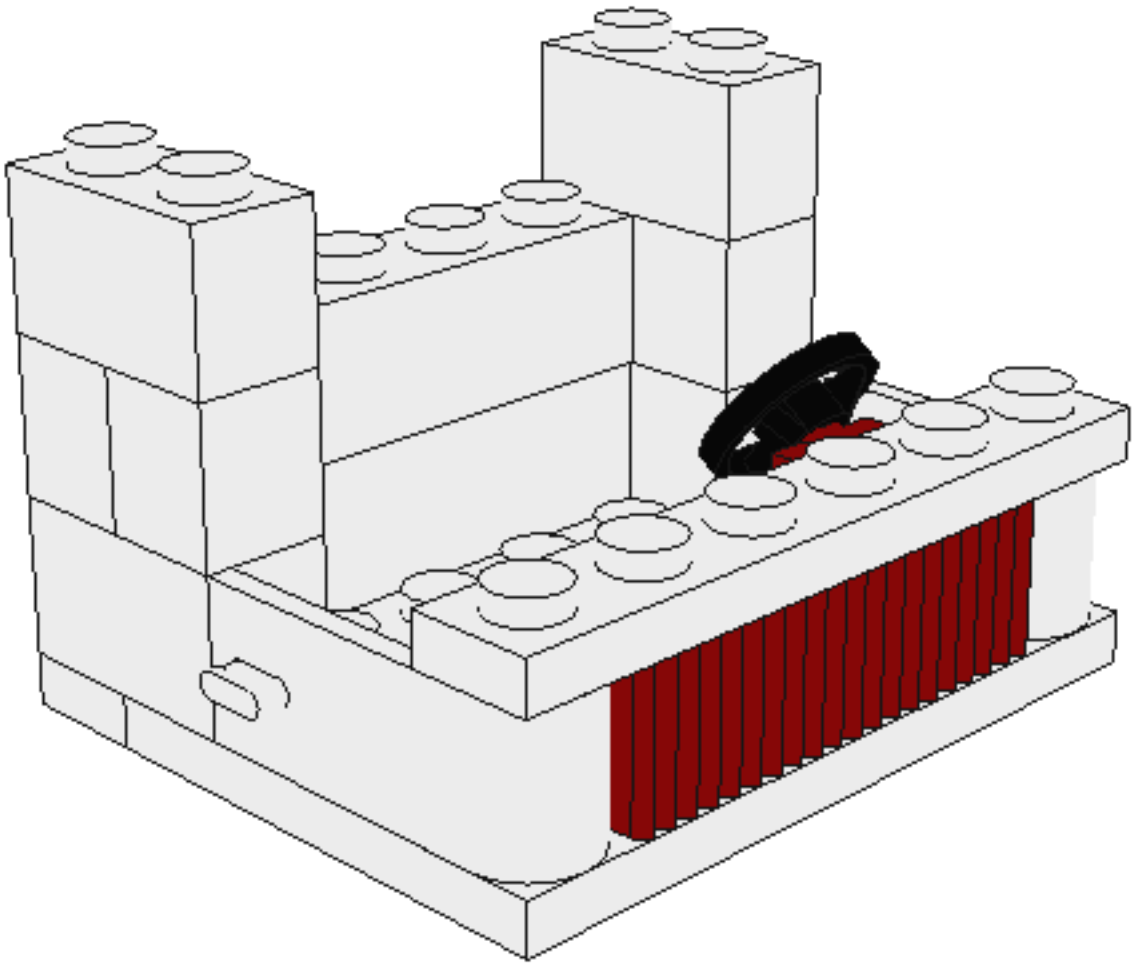

© Brickbuilder - 2006

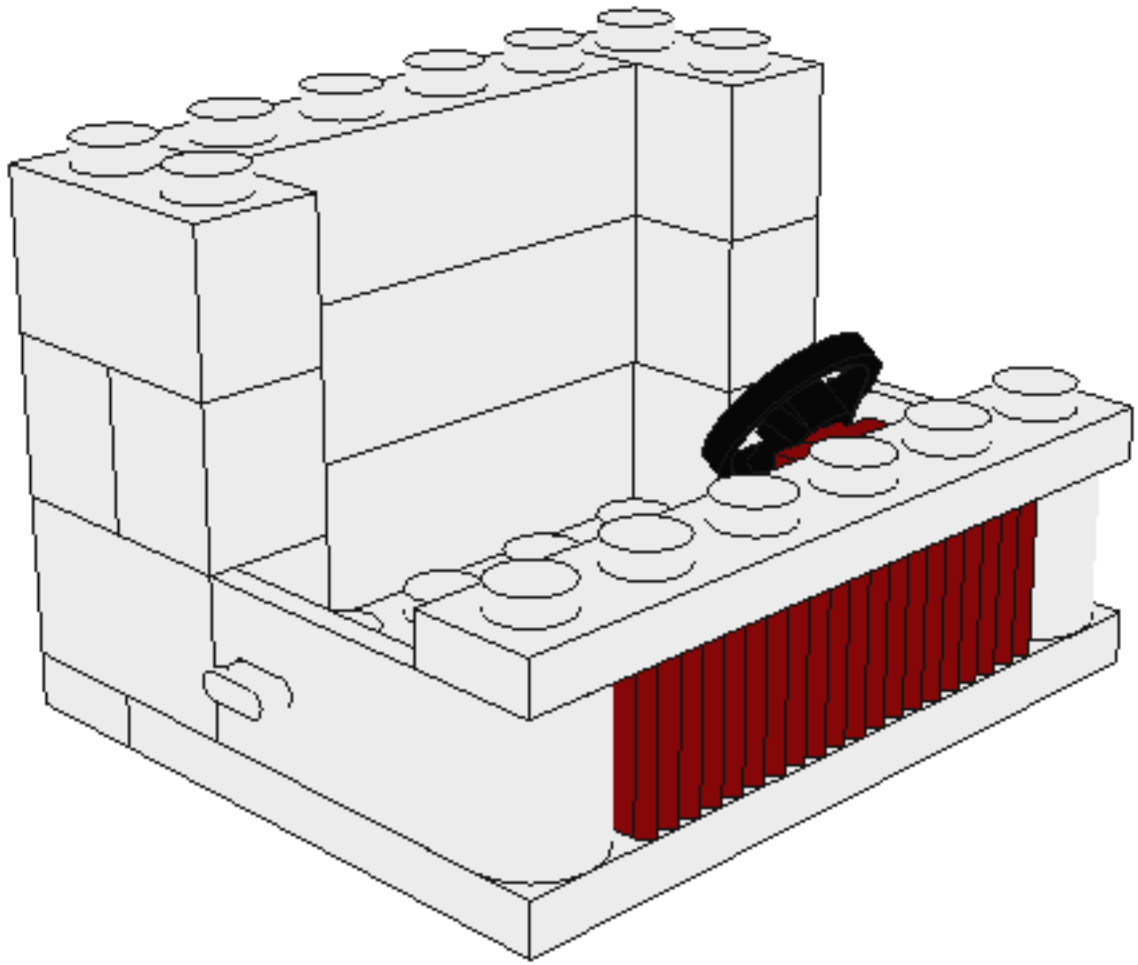

© Brickbuilder - 2006

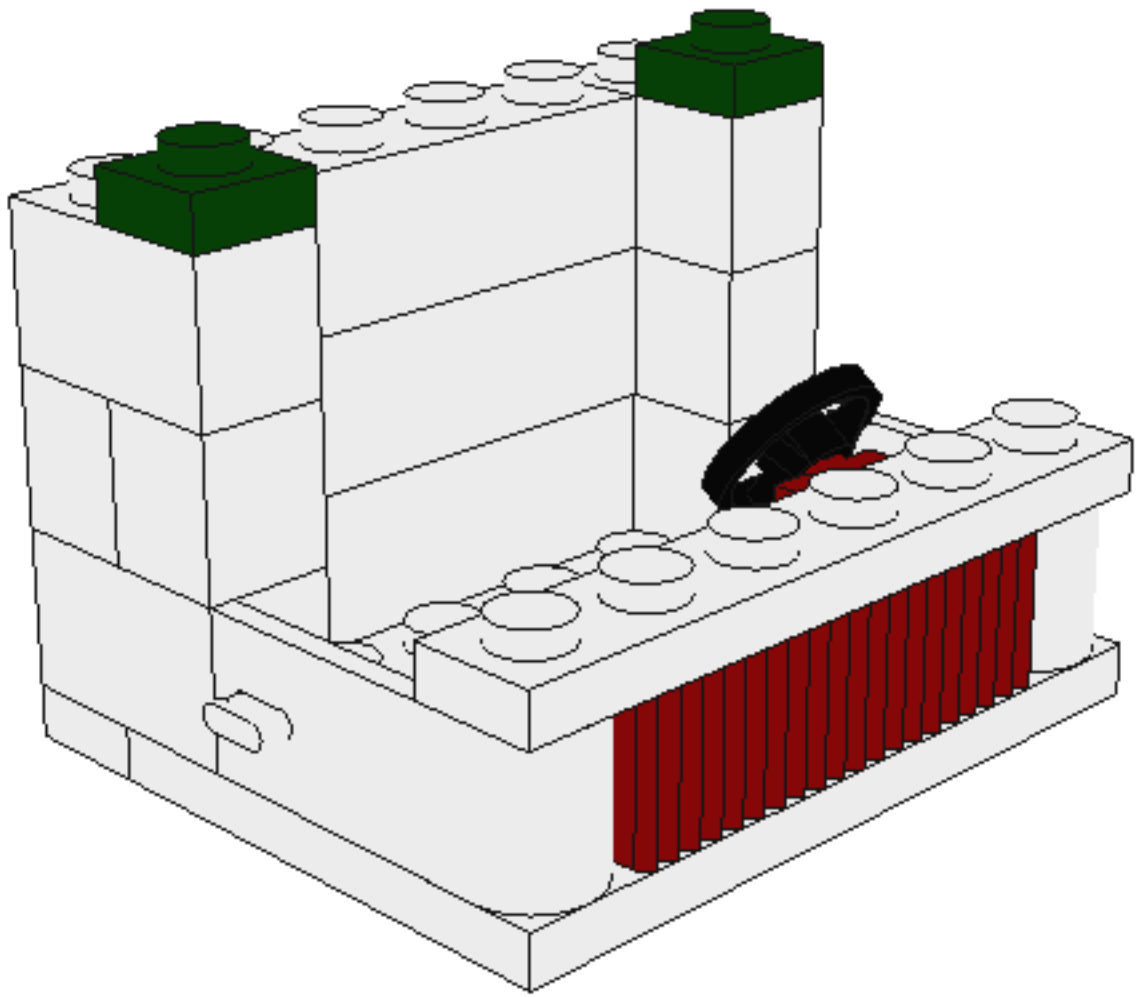

© Brickbuilder - 2006

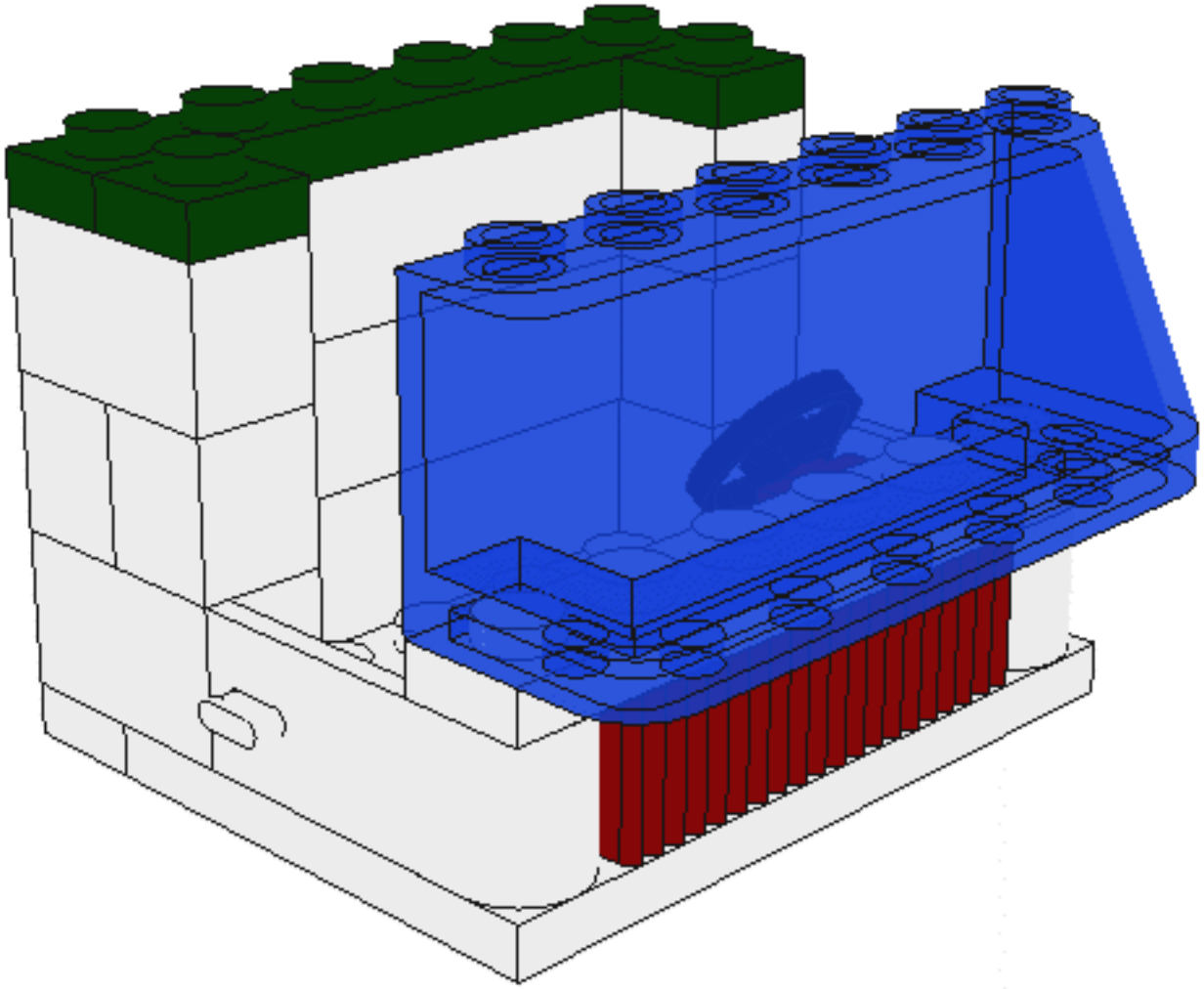

© Brickbuilder - 2006

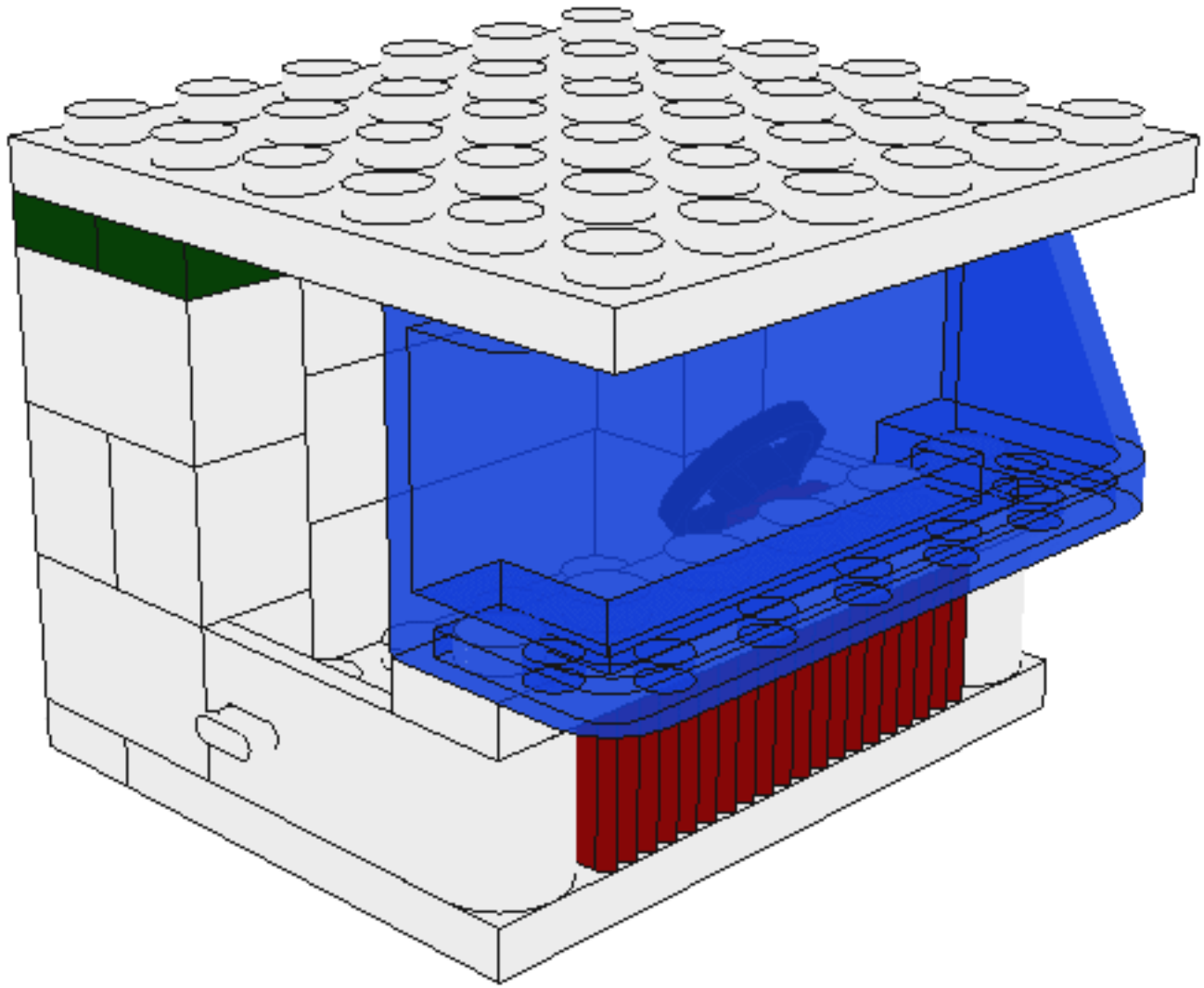

© Brickbuilder - 2006

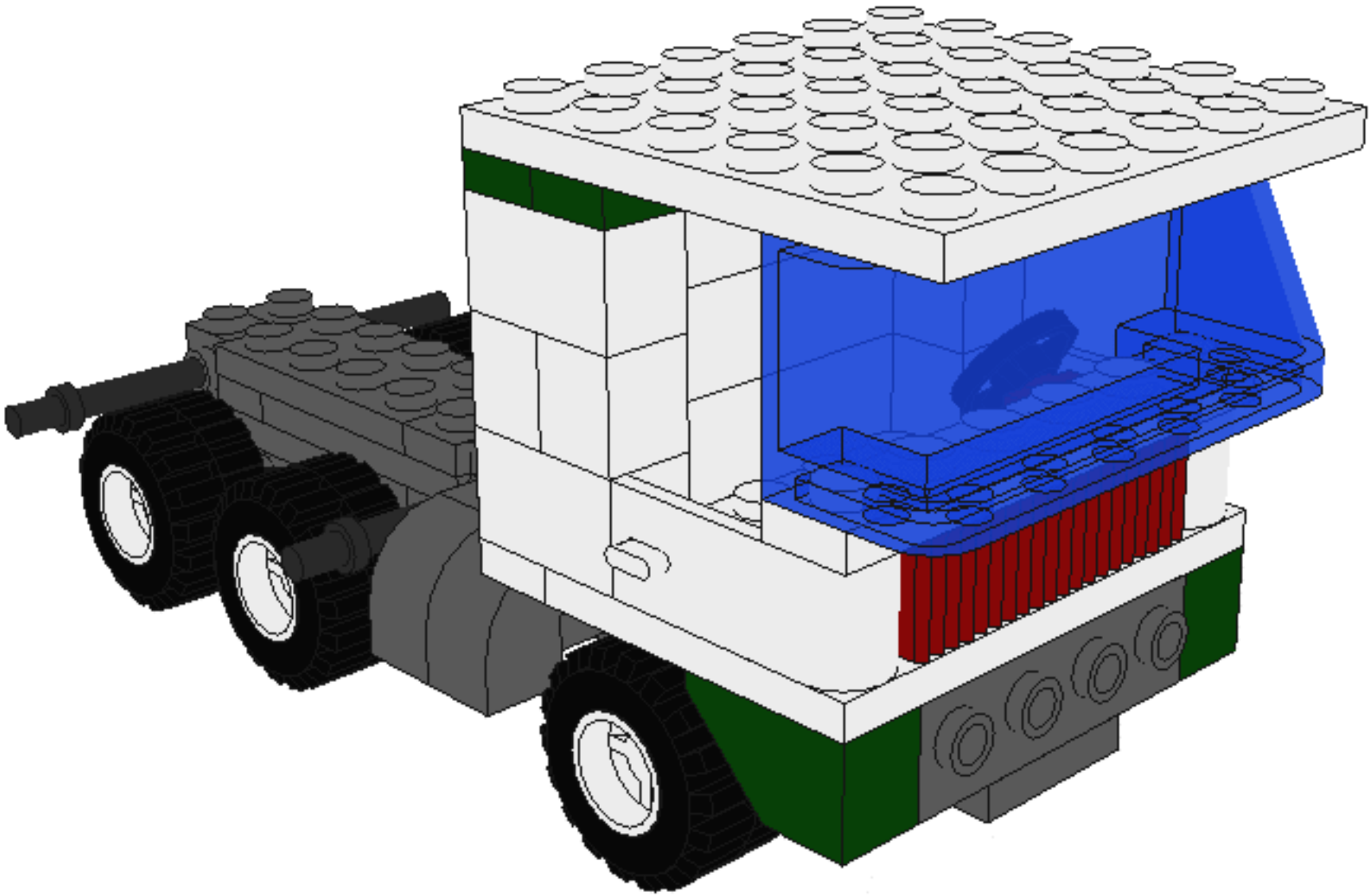

© Brickbuilder - 2006

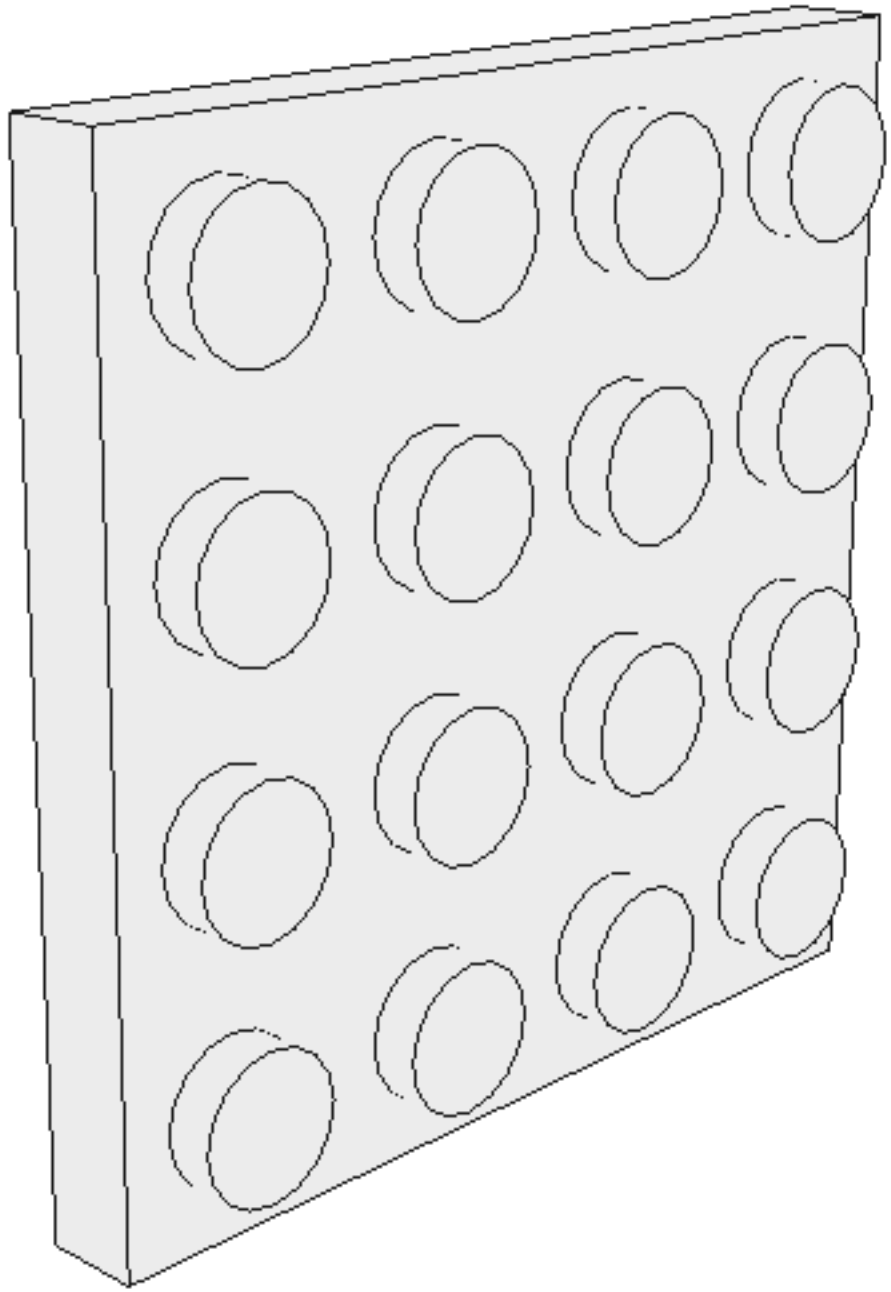

© Brickbuilder - 2006

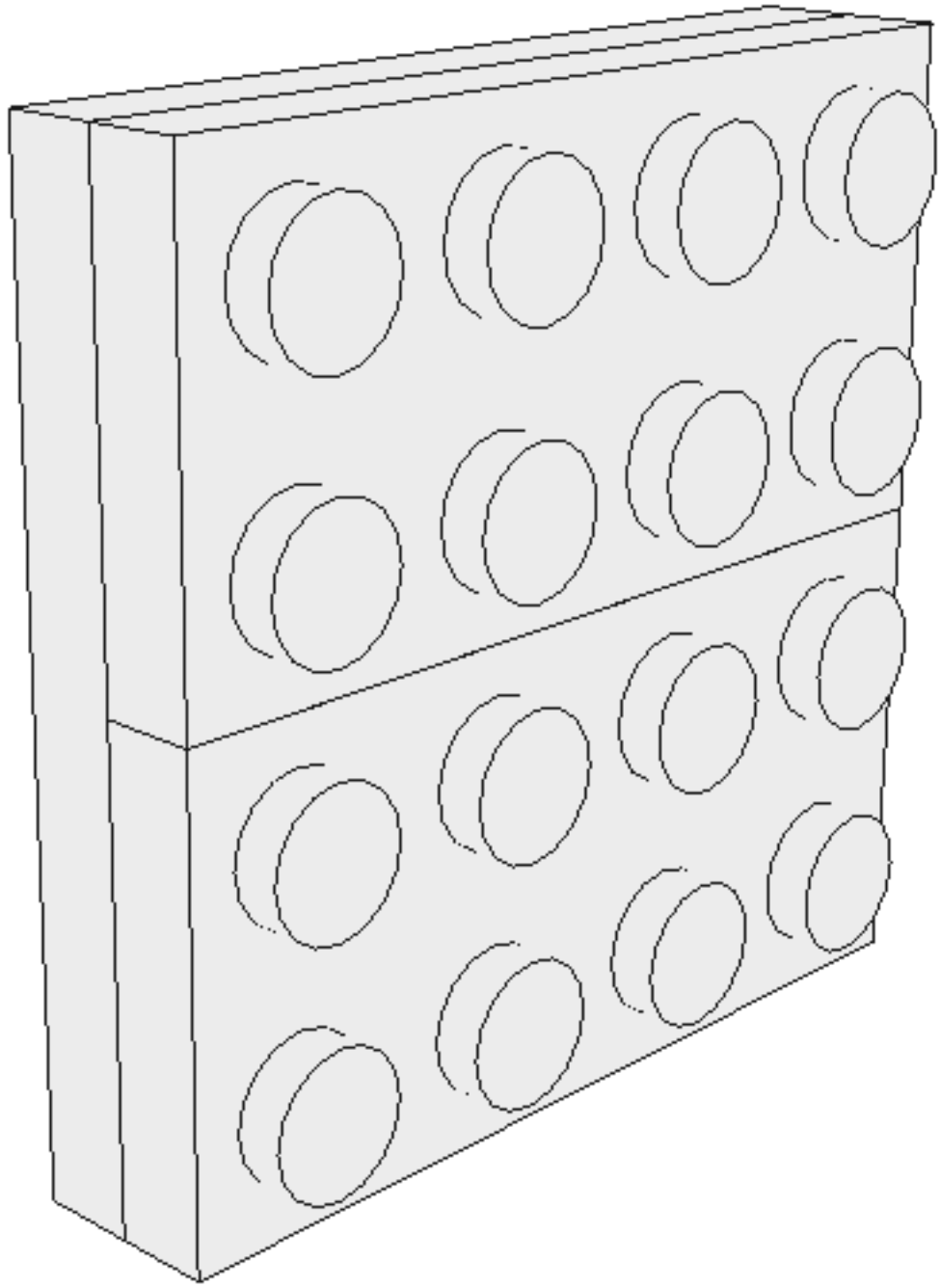

© Brickbuilder - 2006

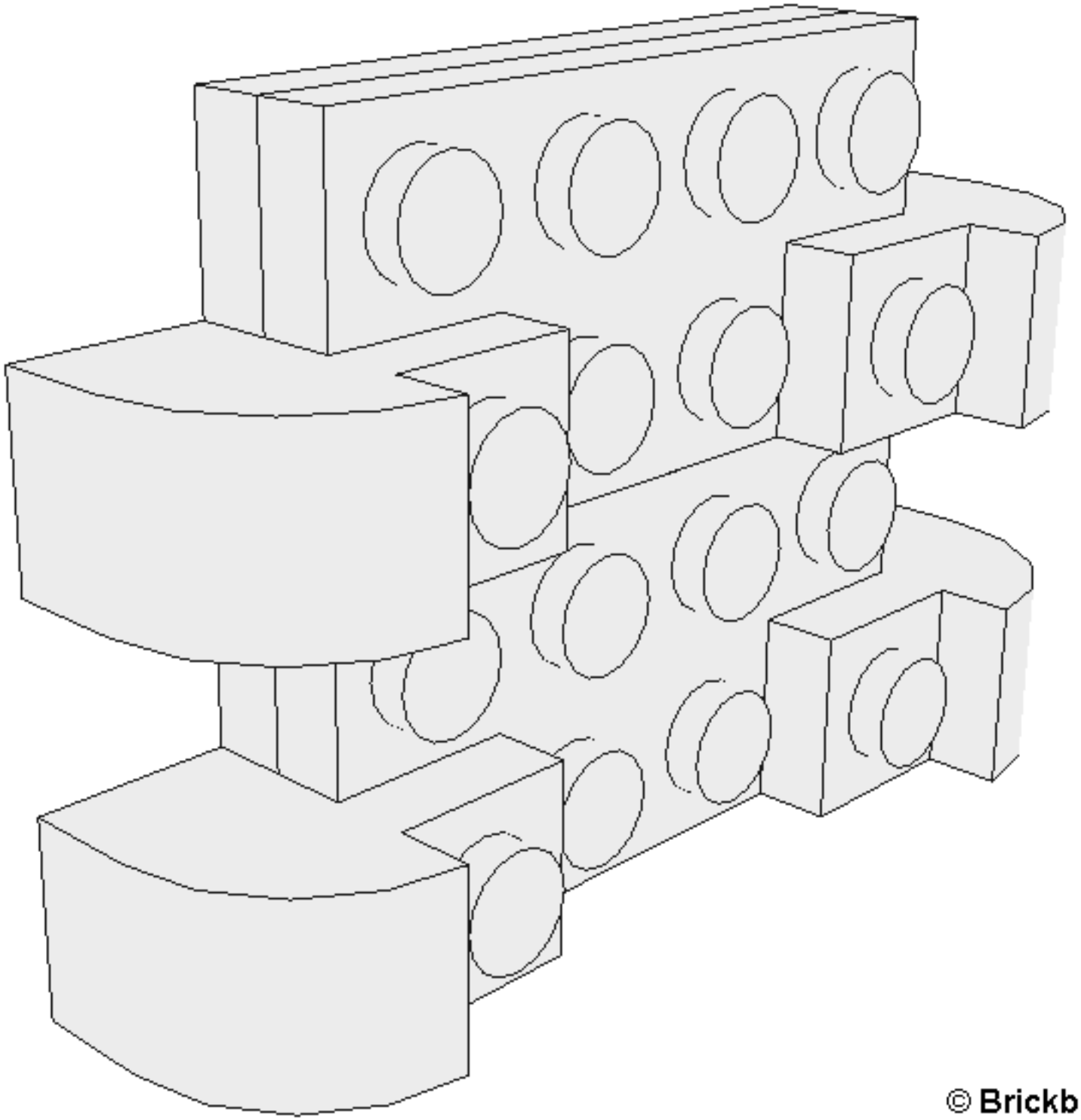

© Brickbuilder - 2006

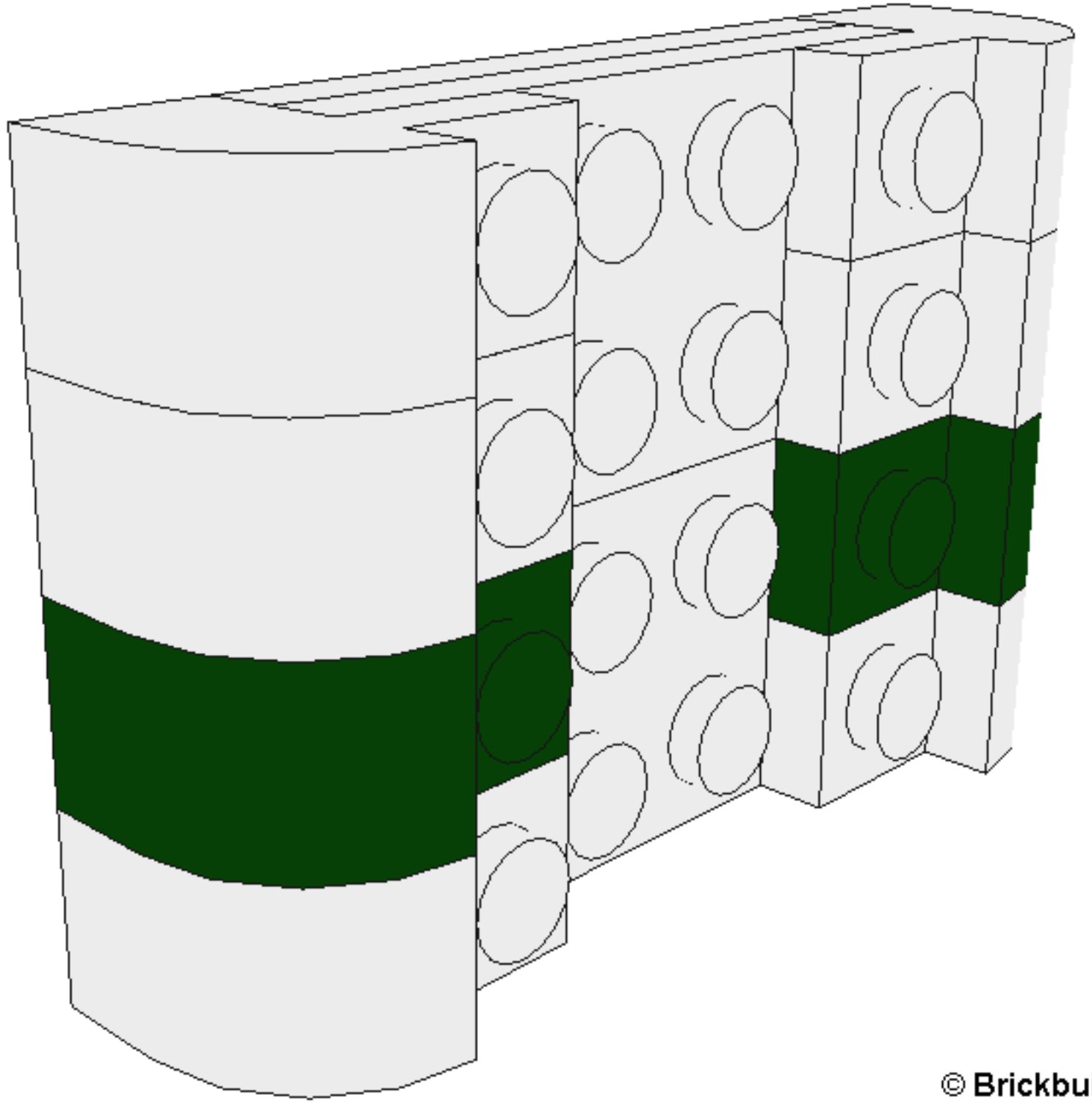

© Brickbuilder - 2006

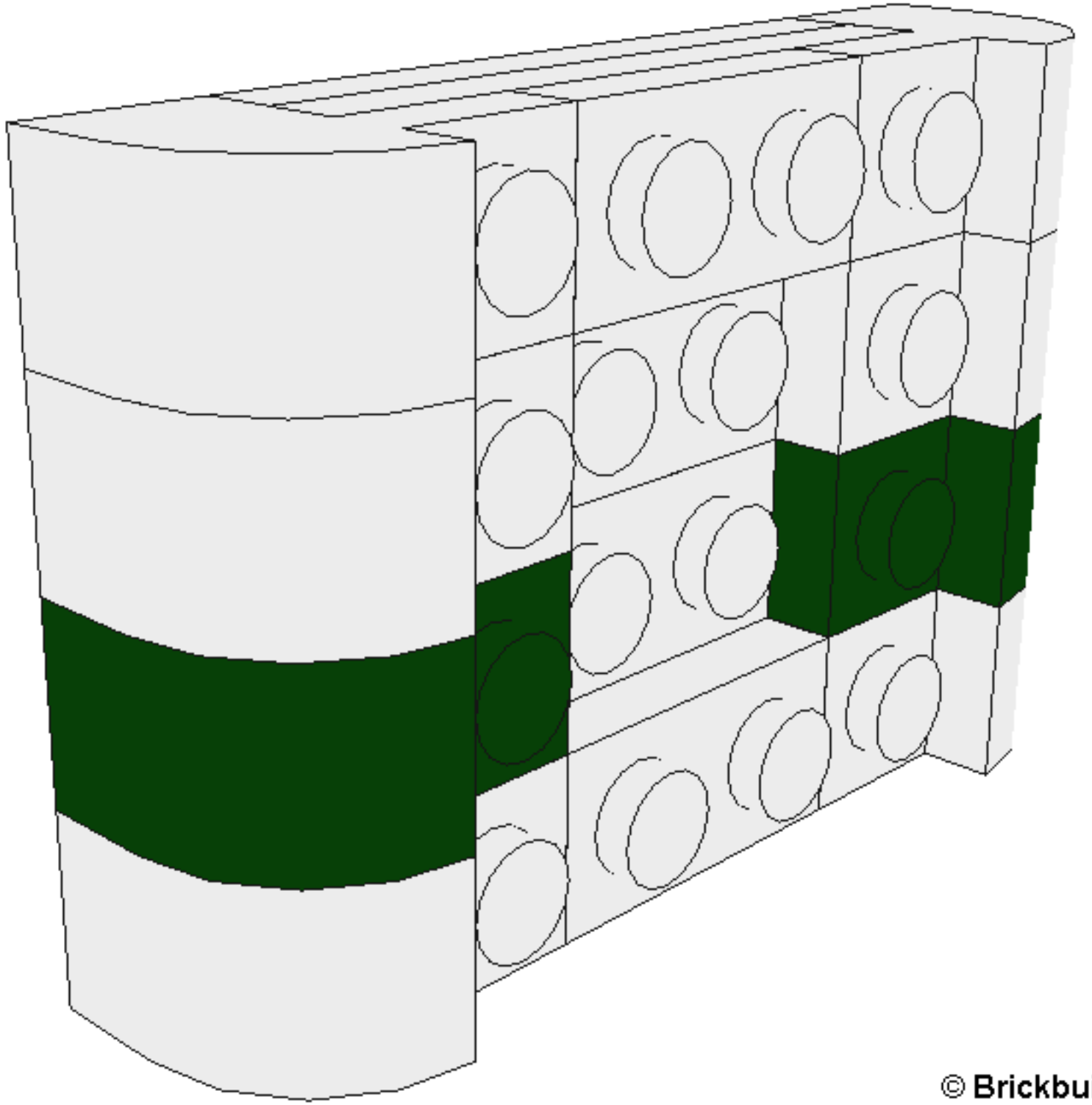

© Brickbuilder - 2006

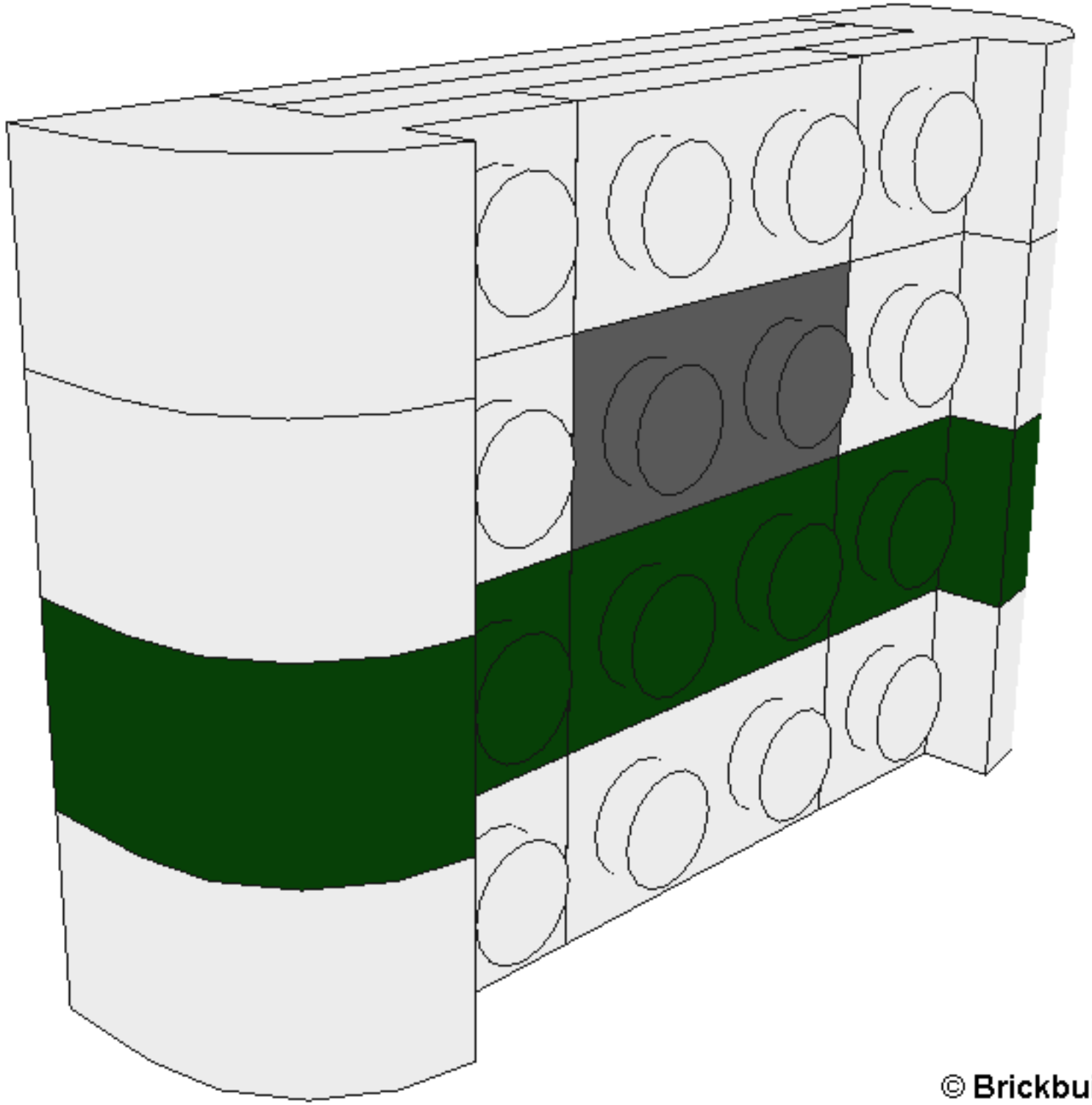

© Brickbuilder - 2006

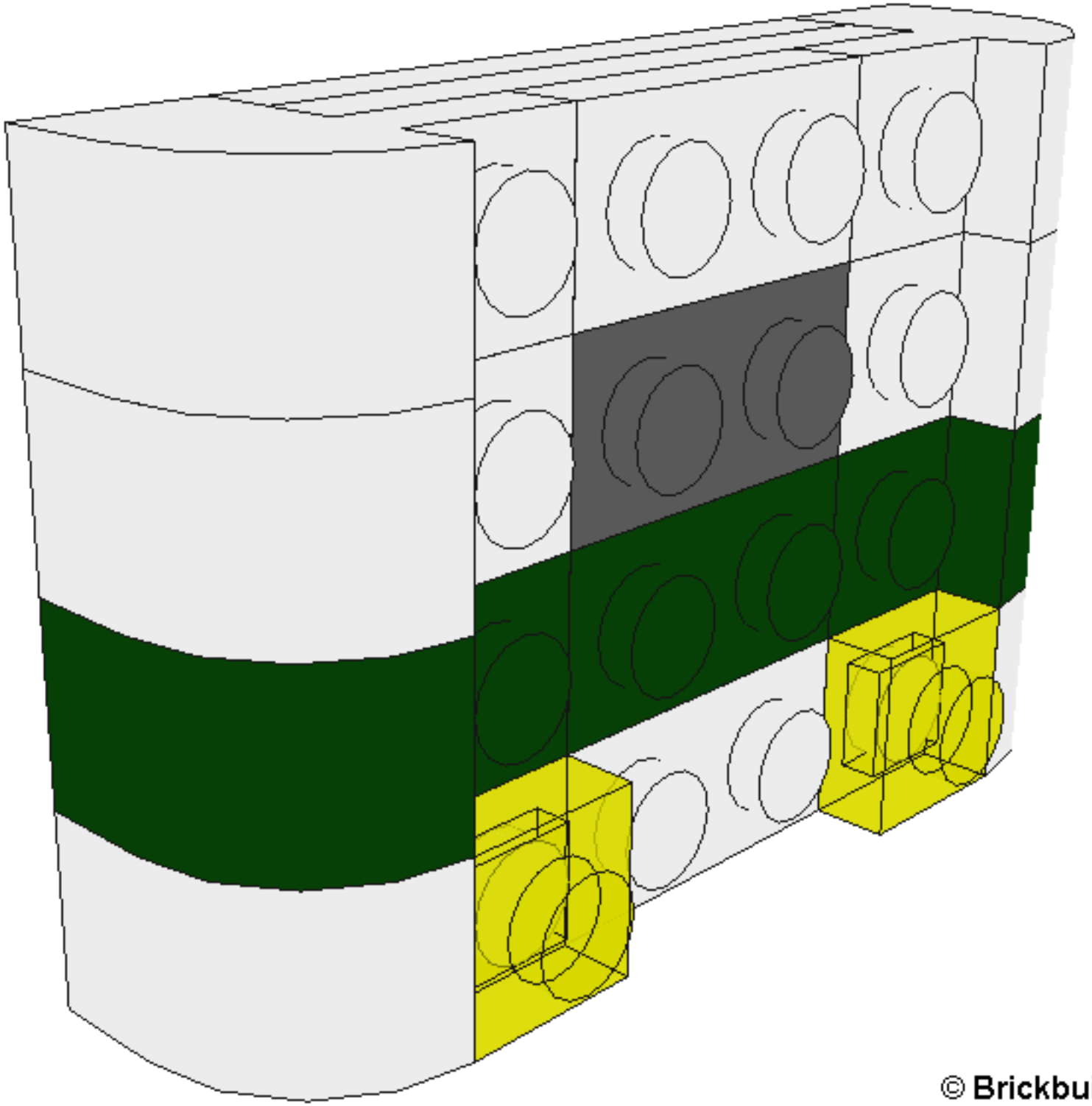

© Brickbuilder - 2006

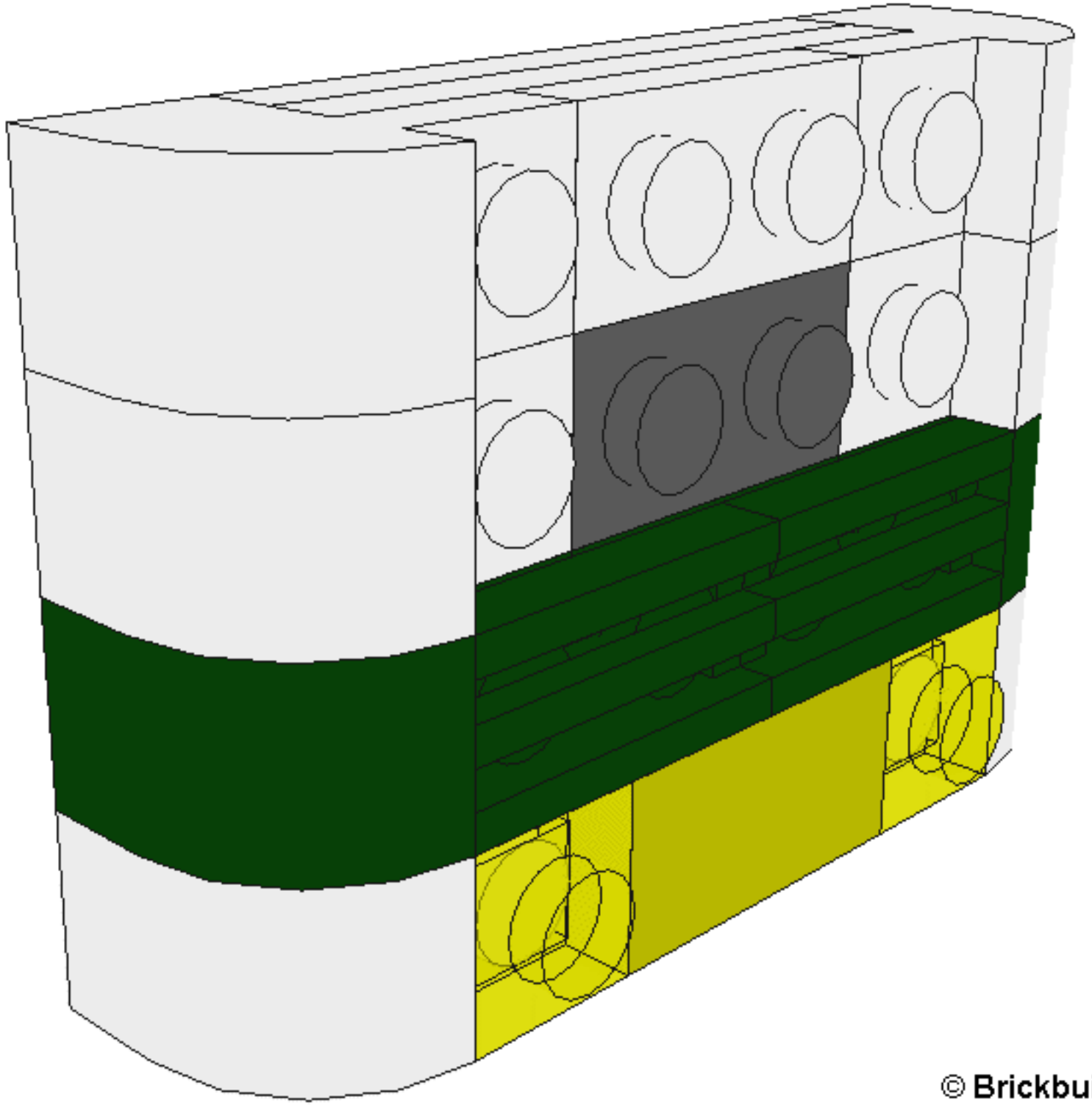

© Brickbuilder - 2006

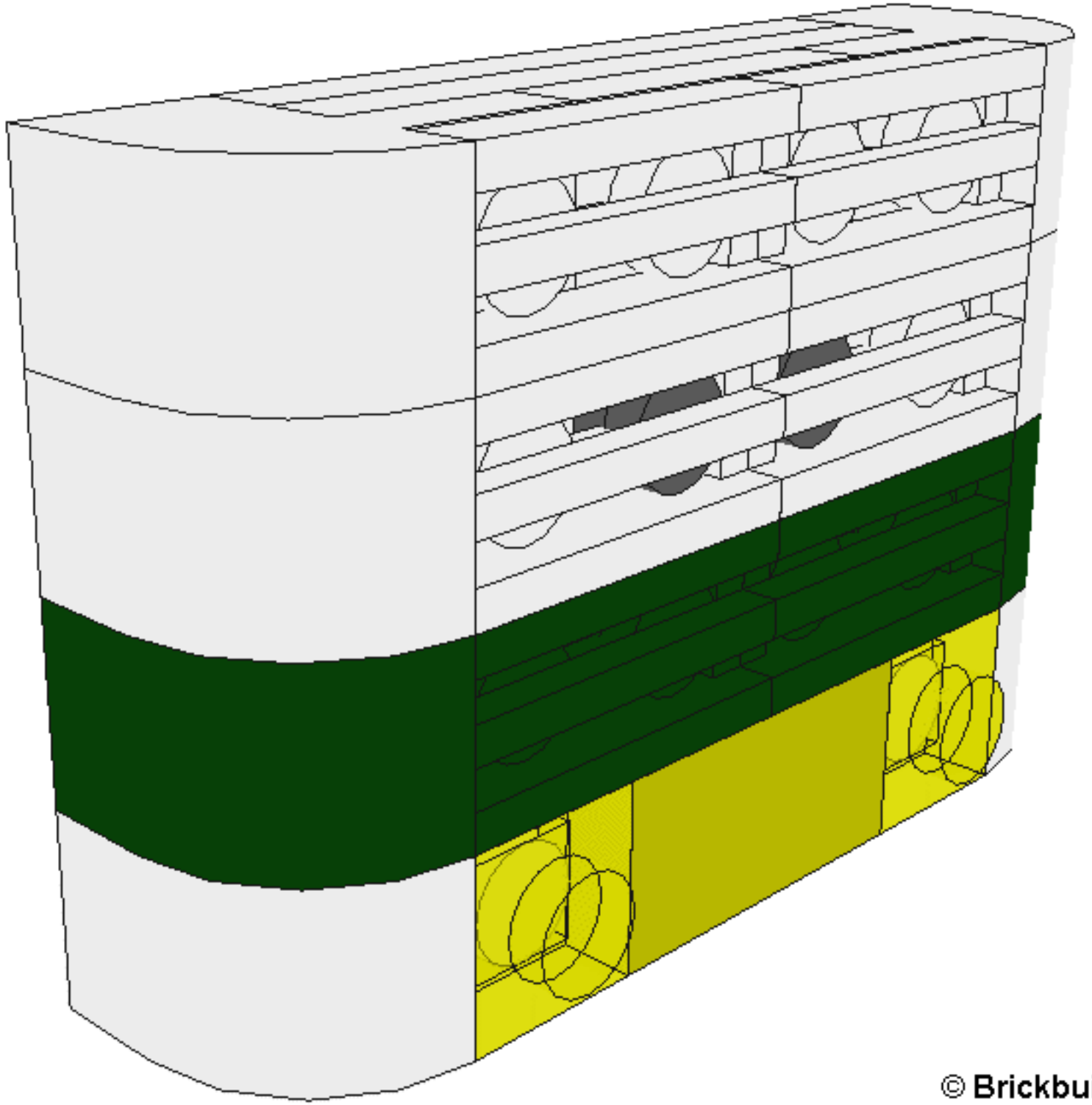

© Brickbuilder - 2006

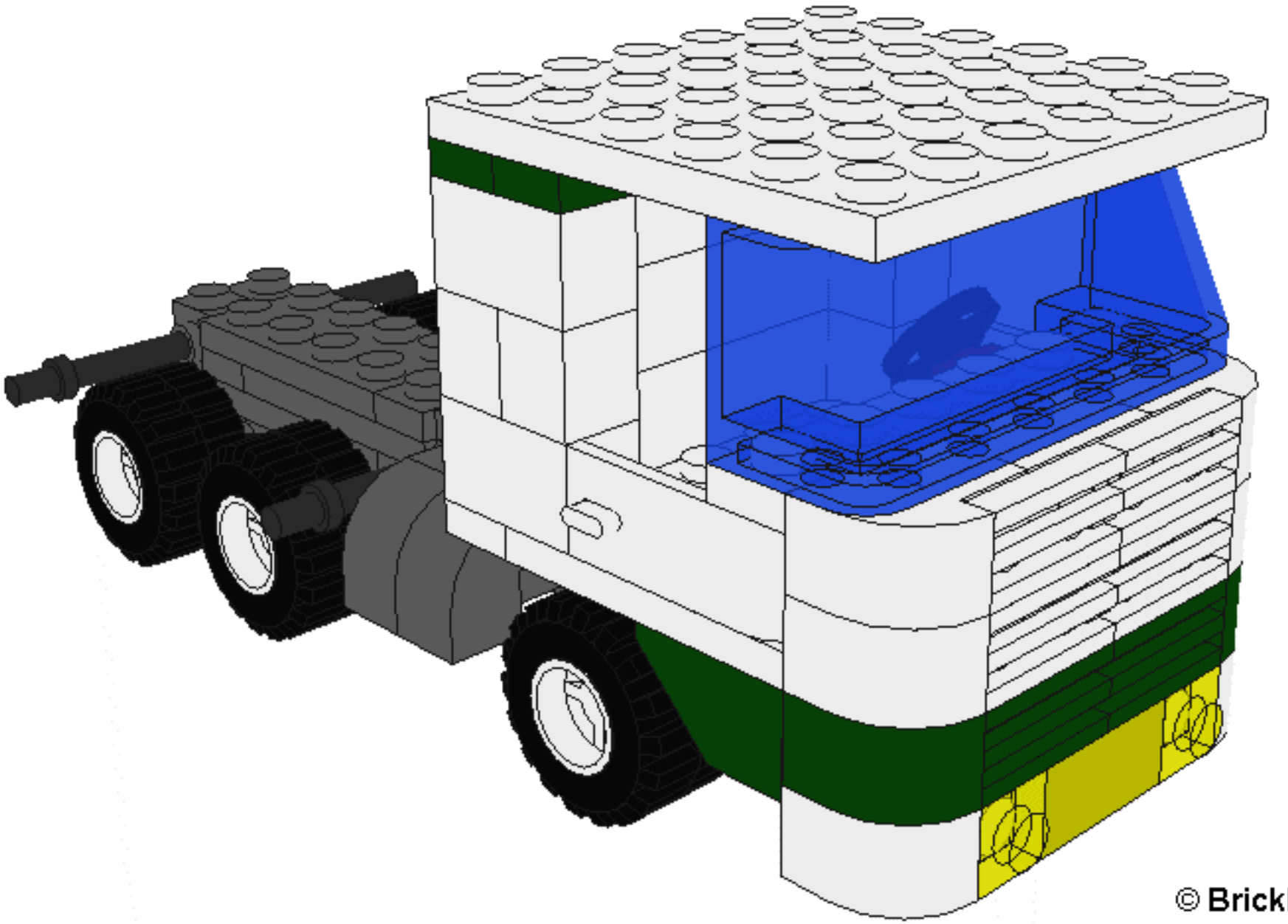

© Brickbuilder - 2006

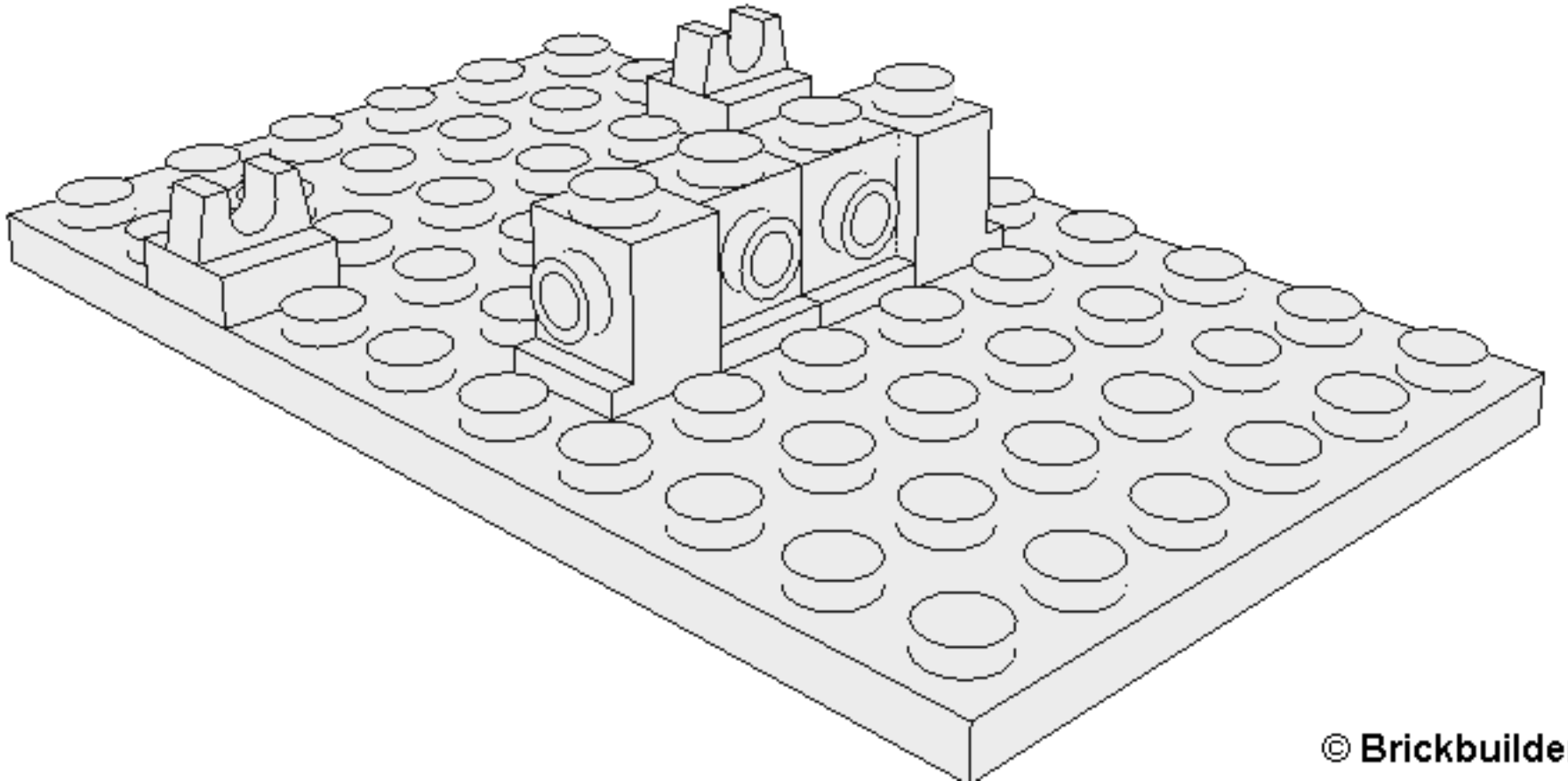

© Brickbuilder - 2006

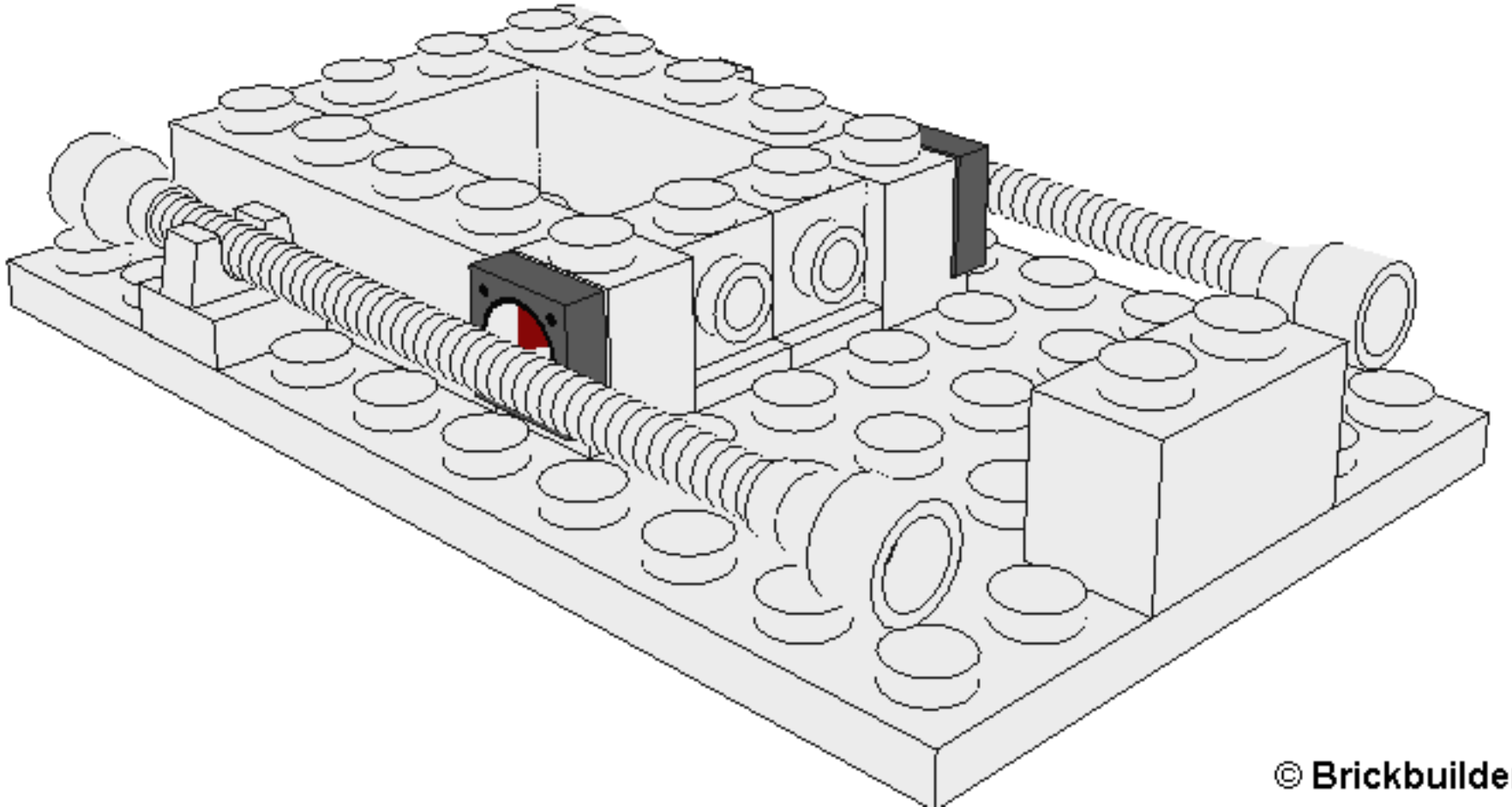

© Brickbuilder - 2006

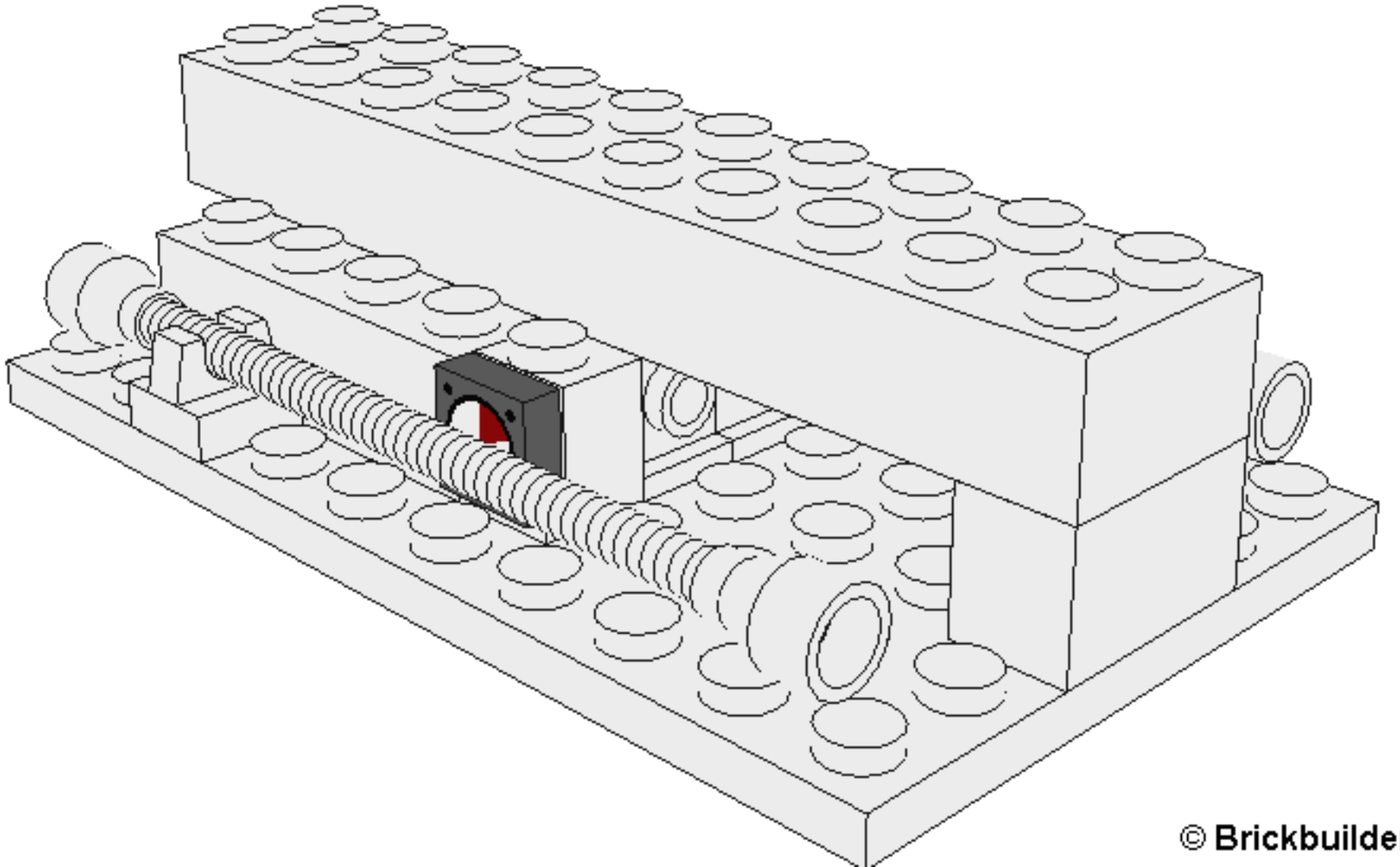

© Brickbuilder - 2006

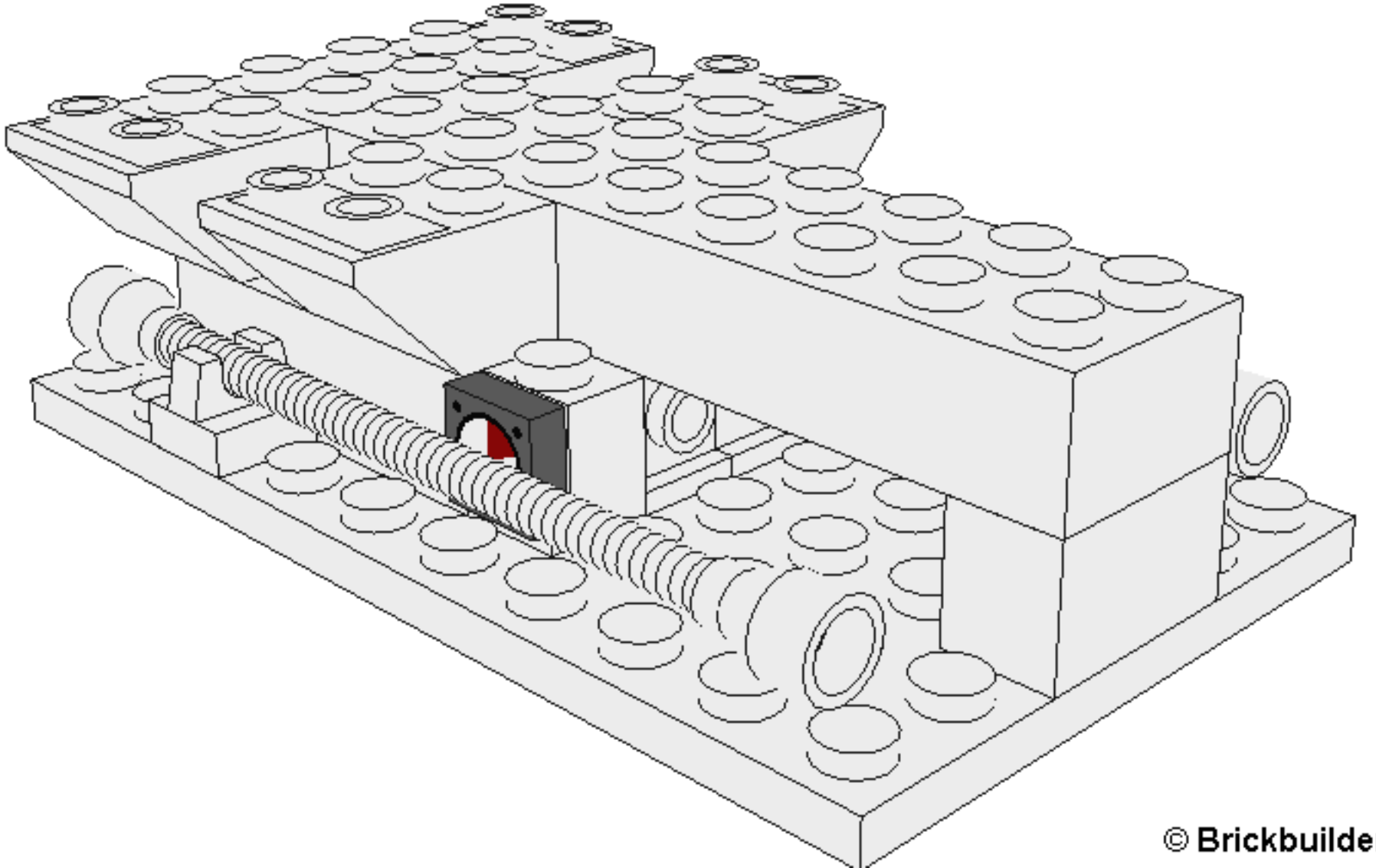

© Brickbuilder - 2006

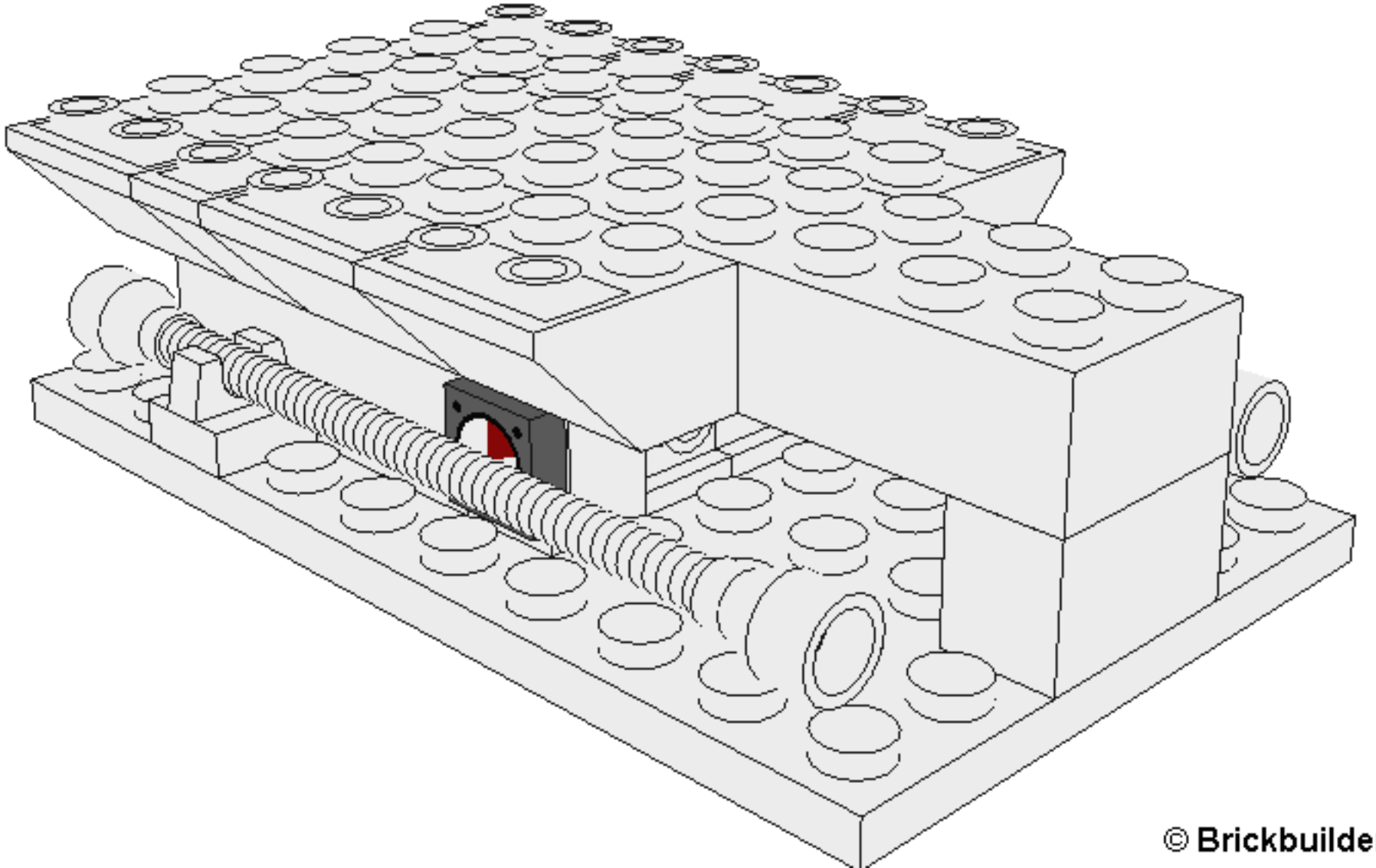

© Brickbuilder - 2006

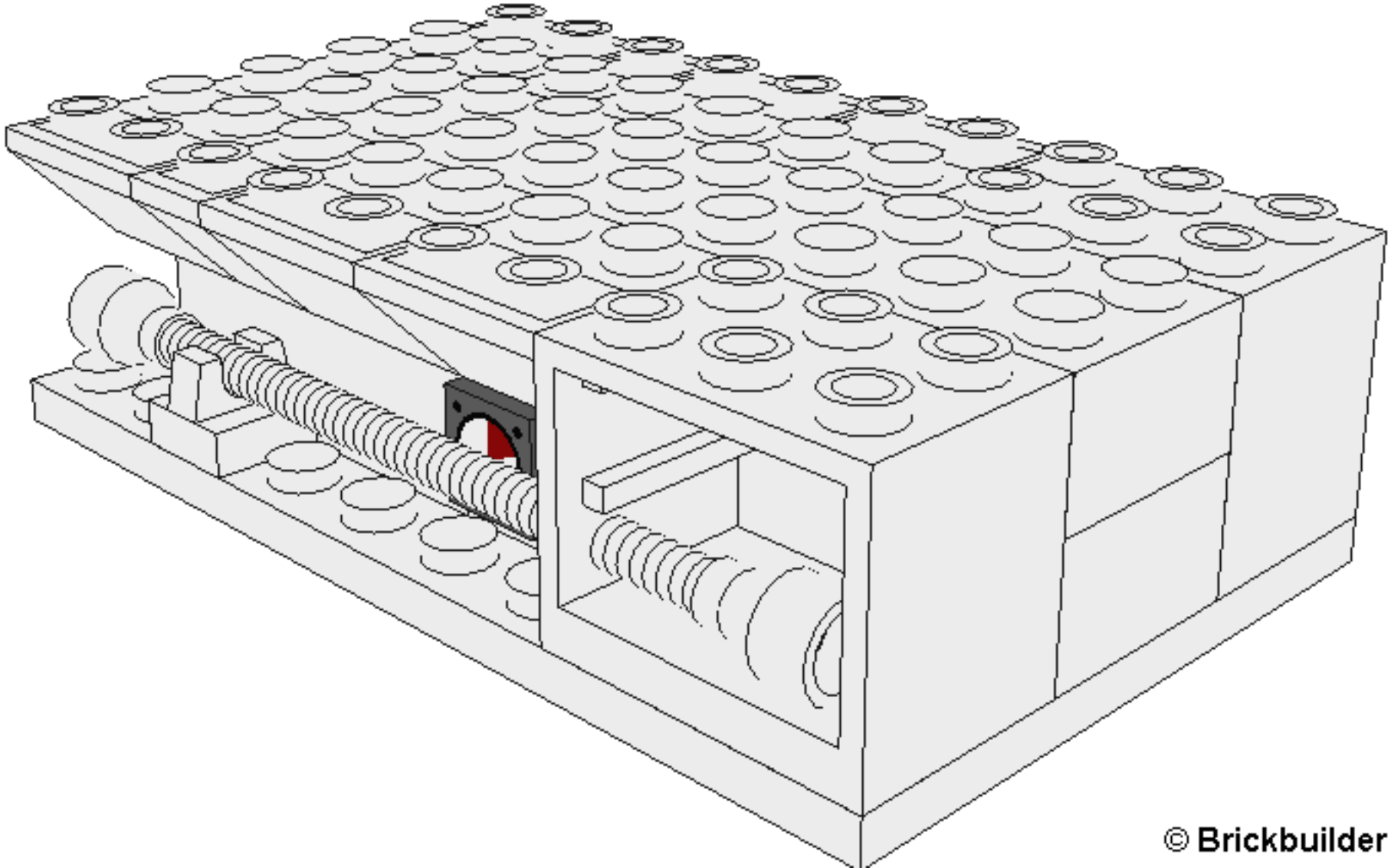

© Brickbuilder - 2006

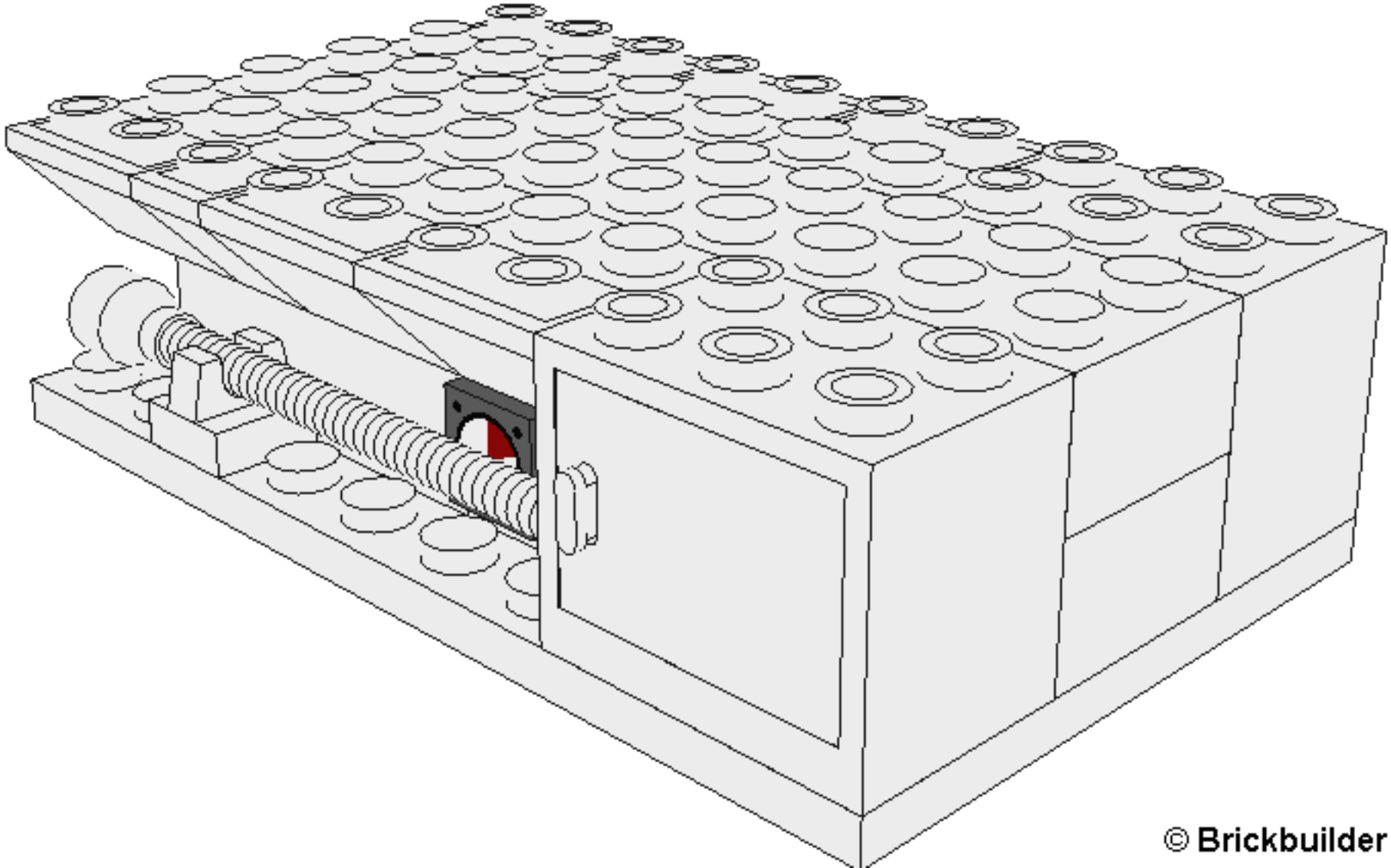

© Brickbuilder - 2006

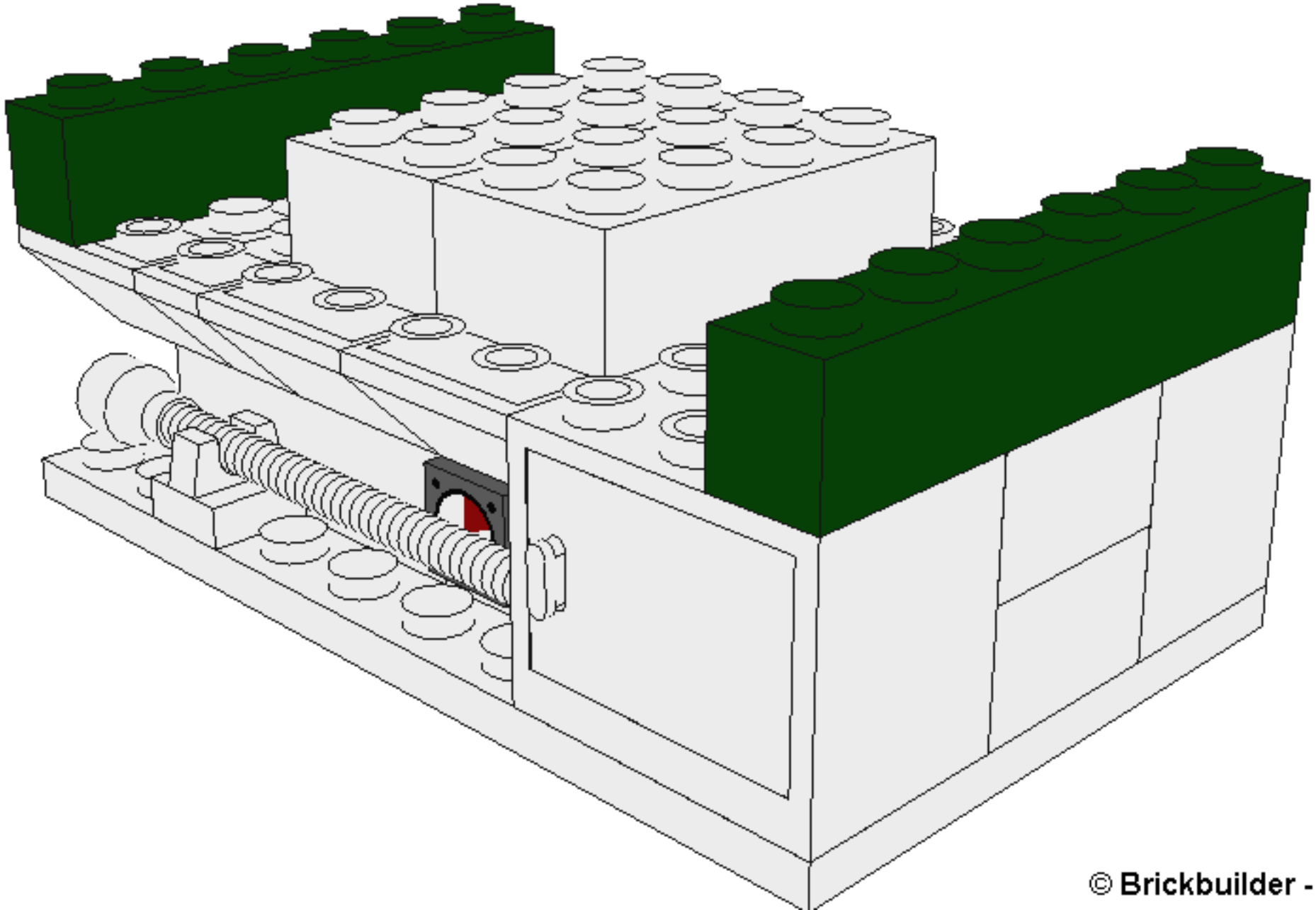

© Brickbuilder - 2006

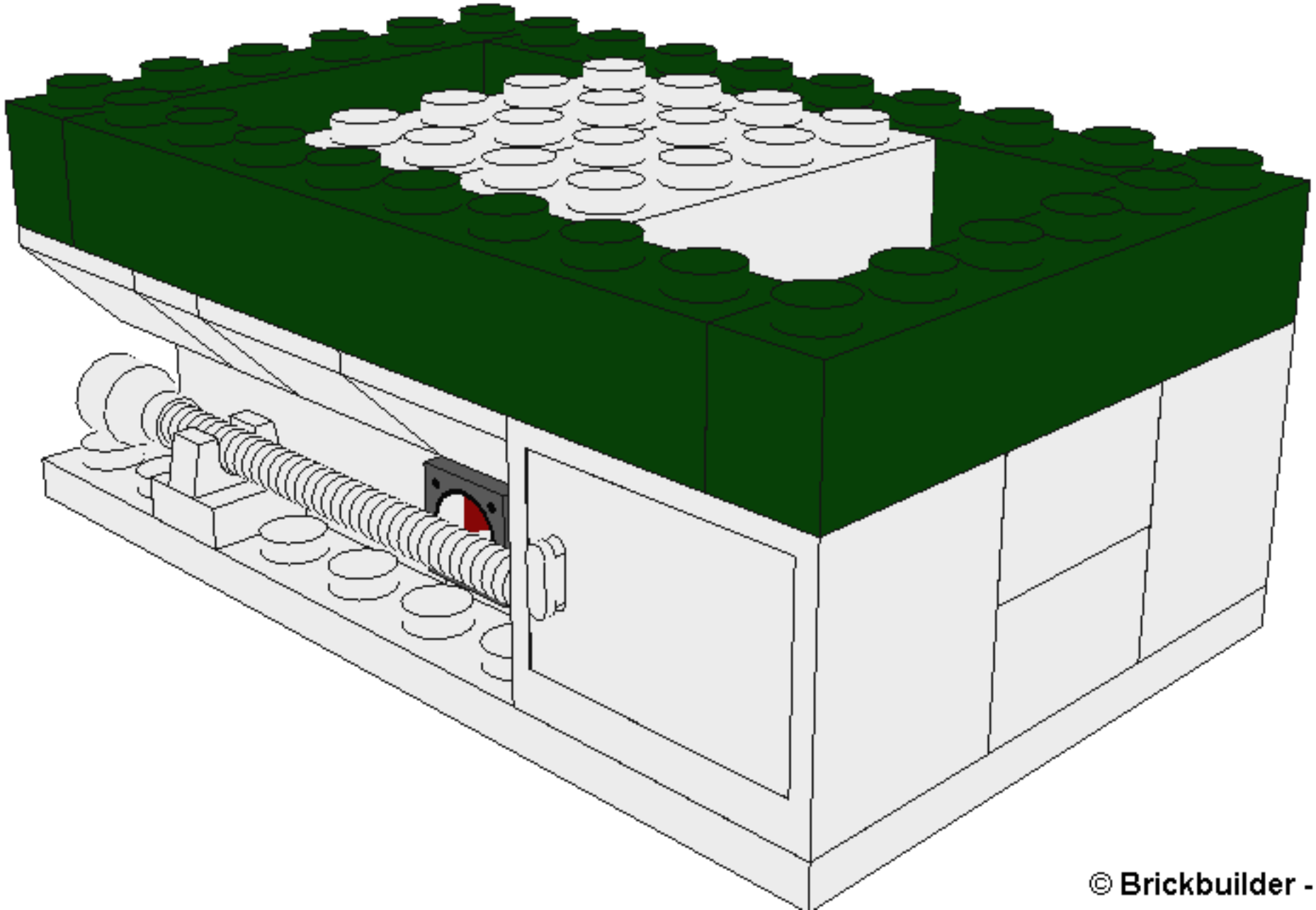

© Brickbuilder - 2006

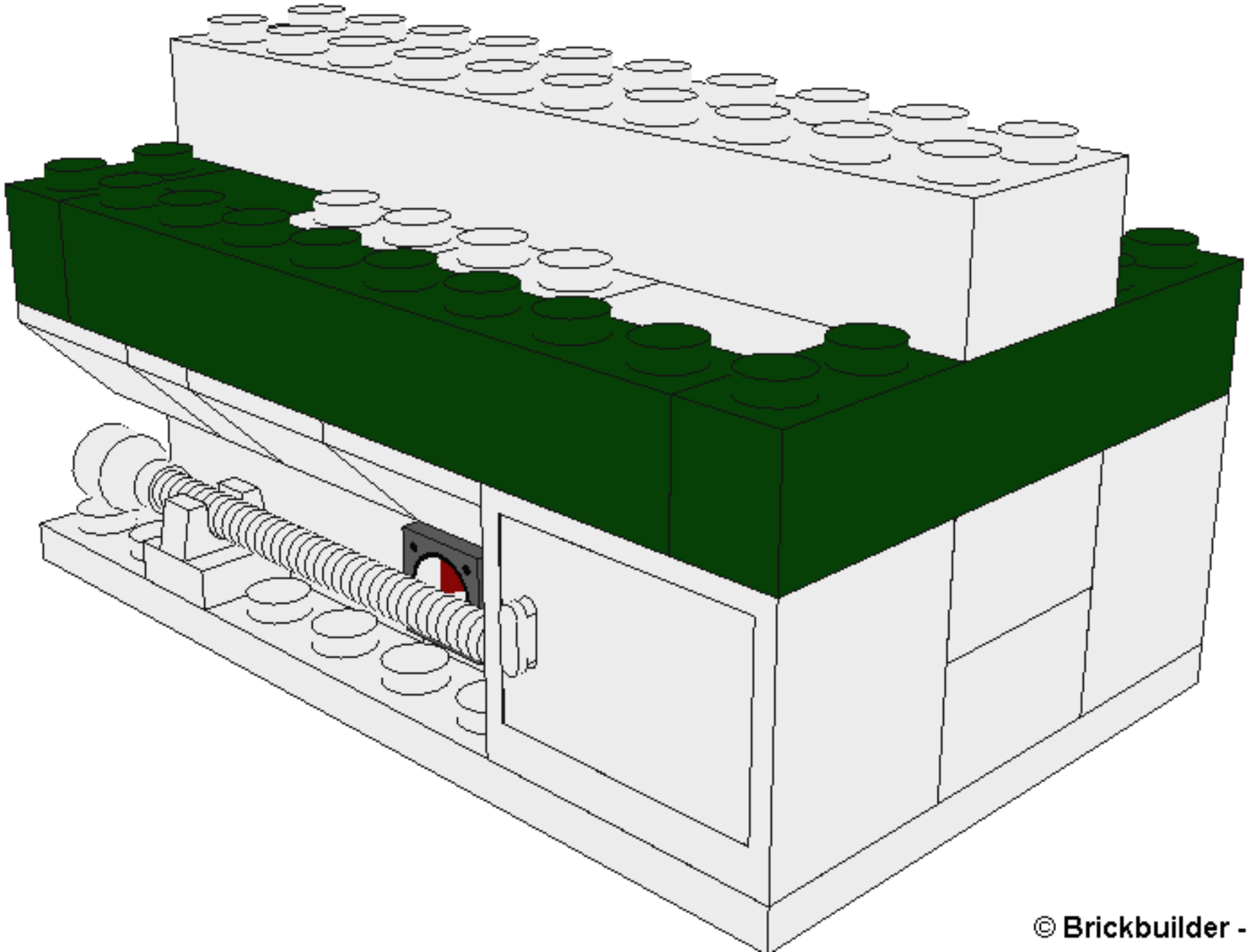

© Brickbuilder - 2006

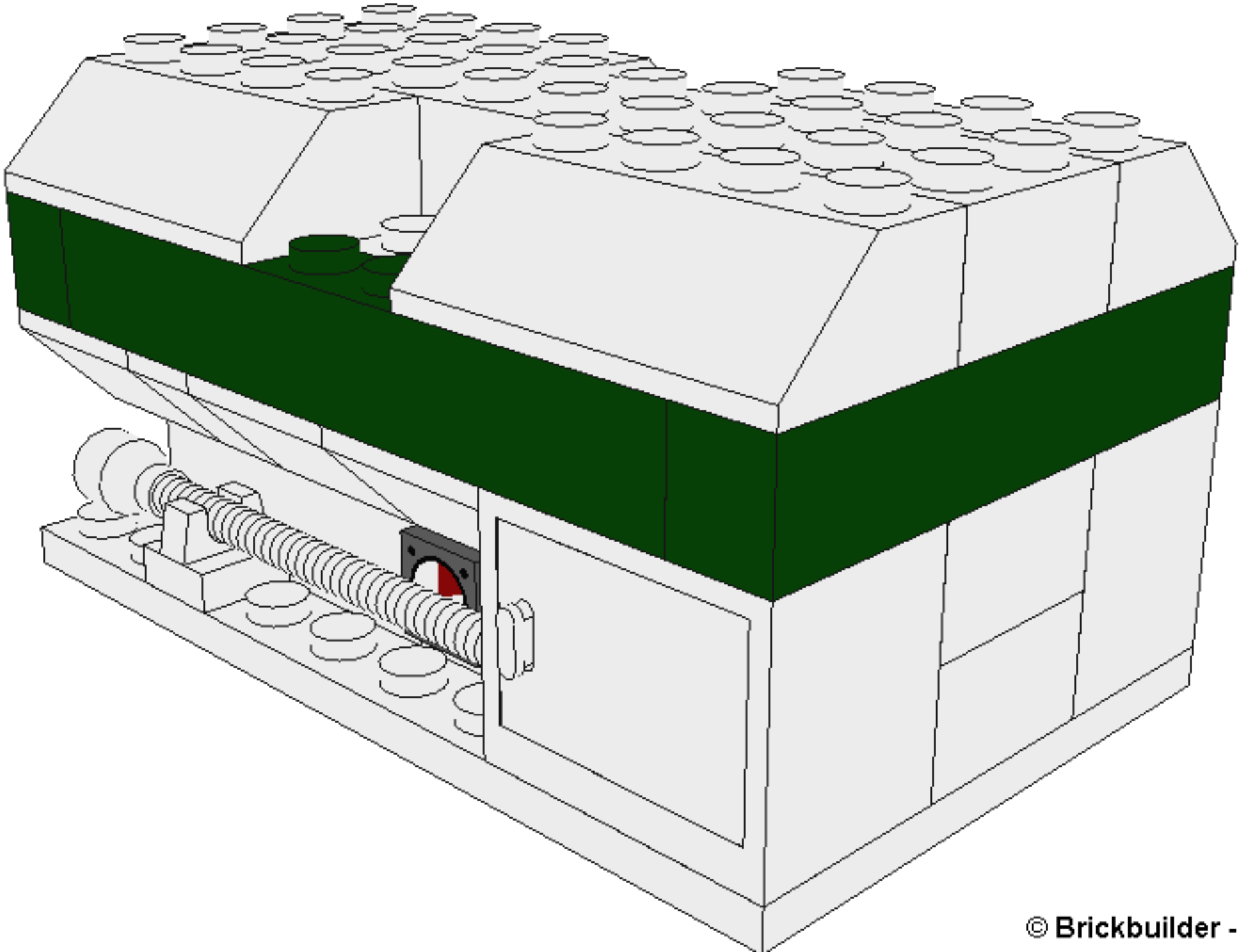

© Brickbuilder - 2006

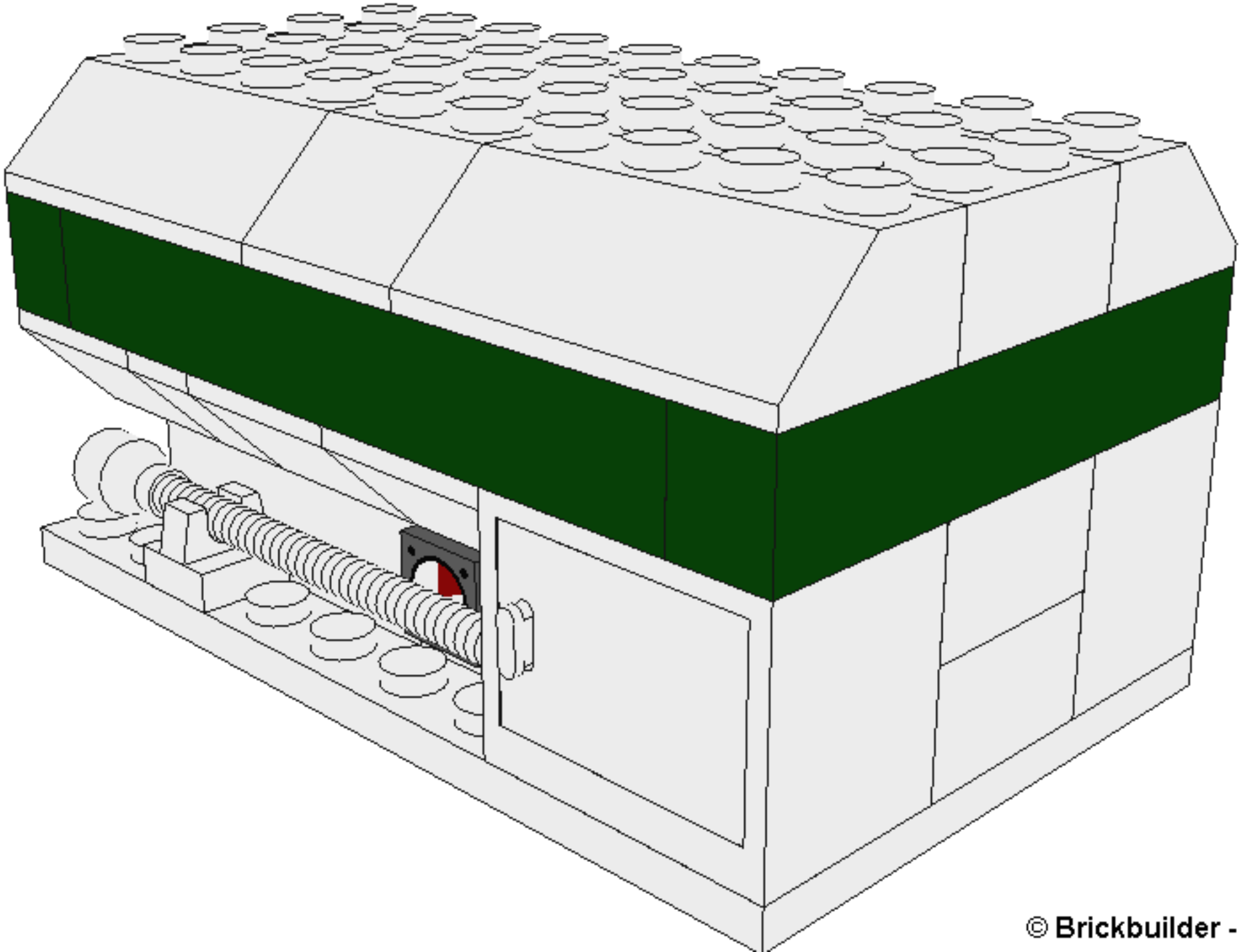

© Brickbuilder - 2006

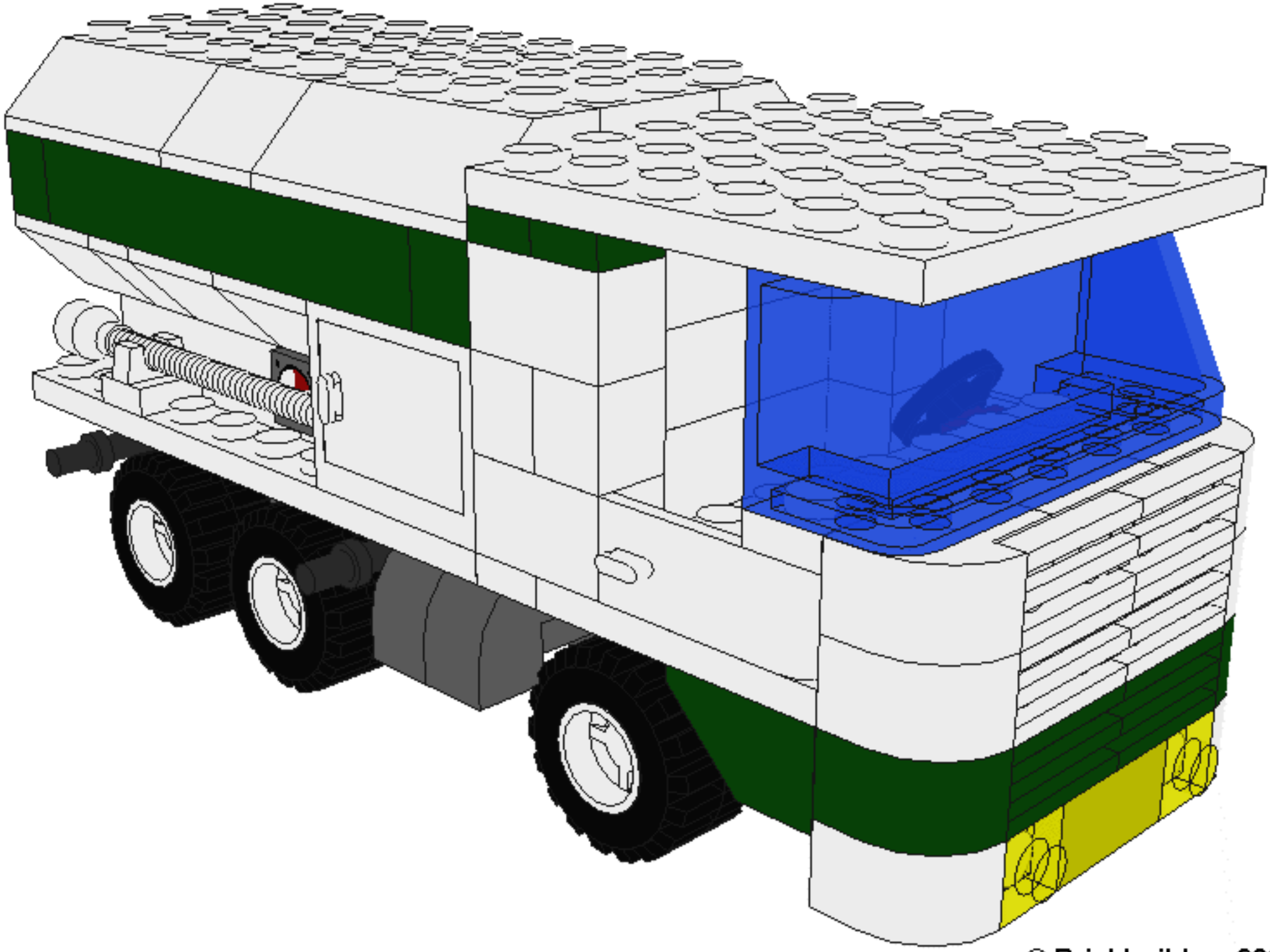
© Brickbuilder - 2006

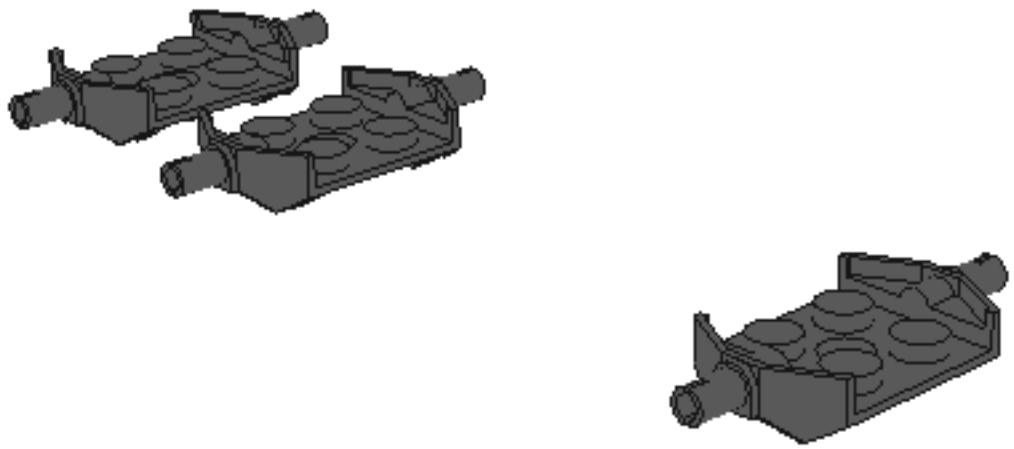

© Brickbuilder - 2006

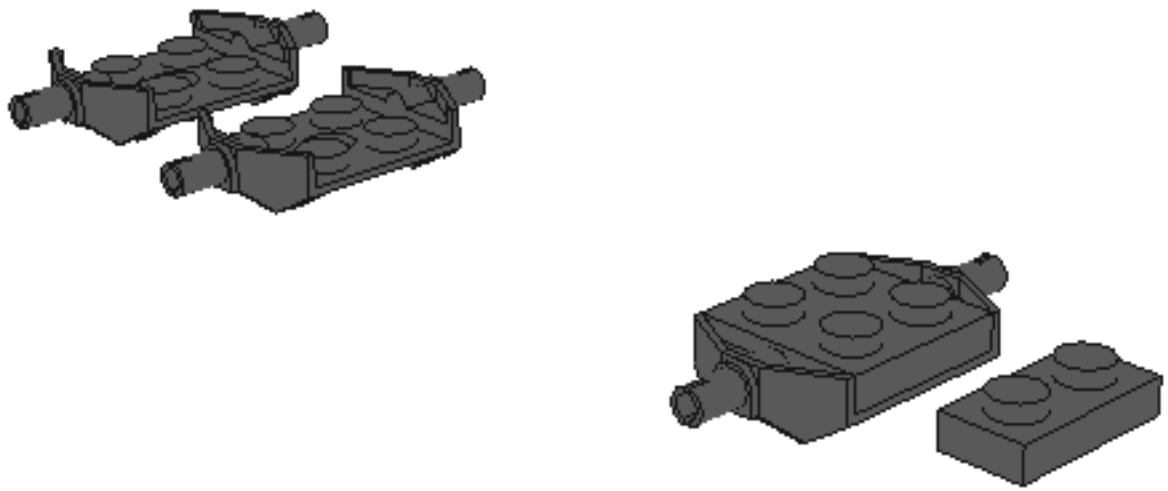

© Brickbuilder - 2006

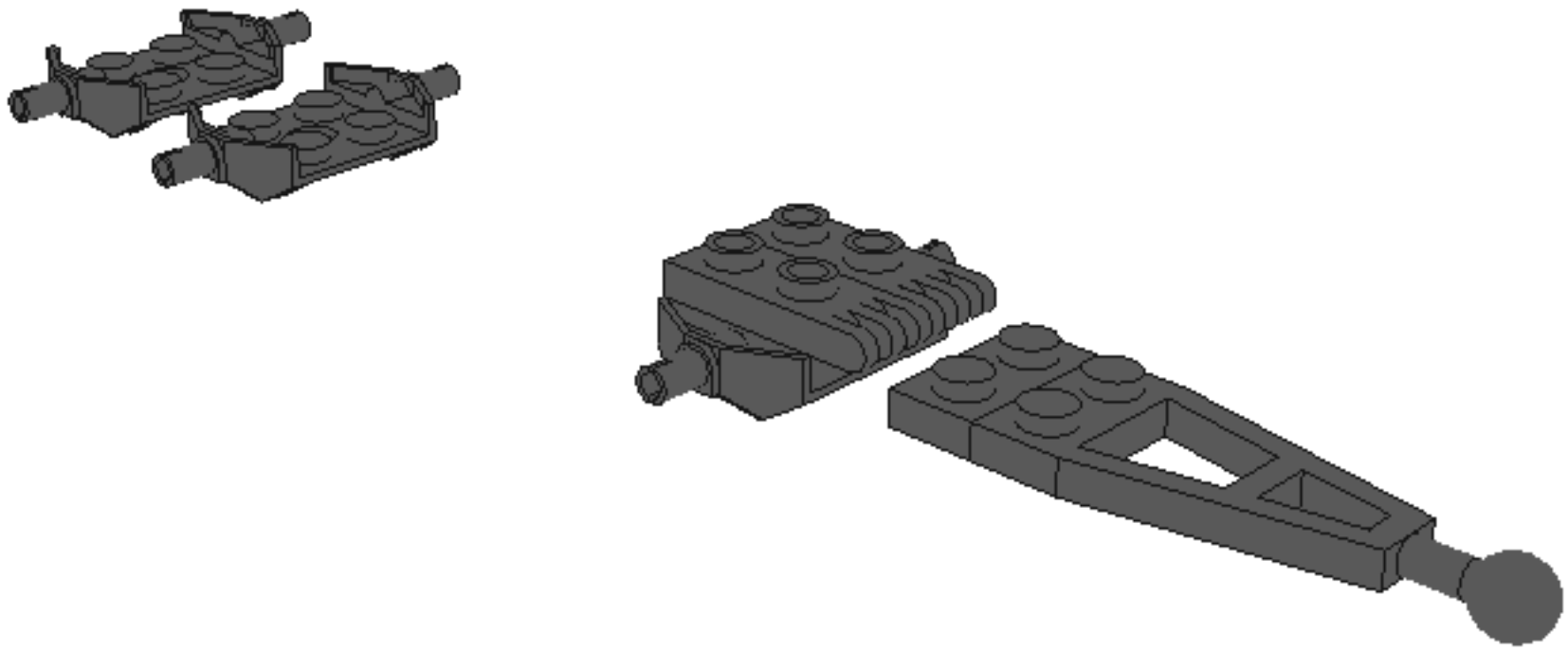

© Brickbuilder - 2006

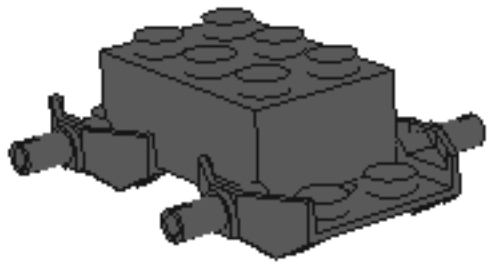

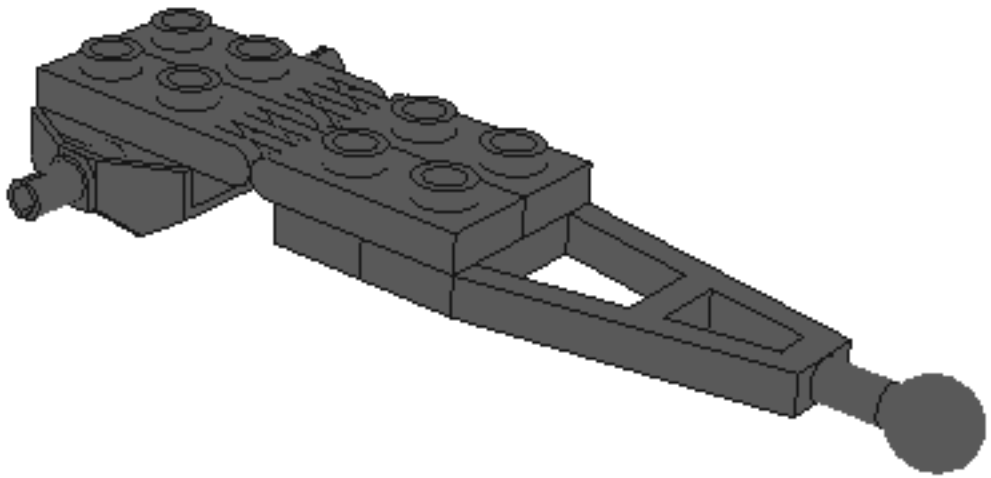

© Brickbuilder - 2006

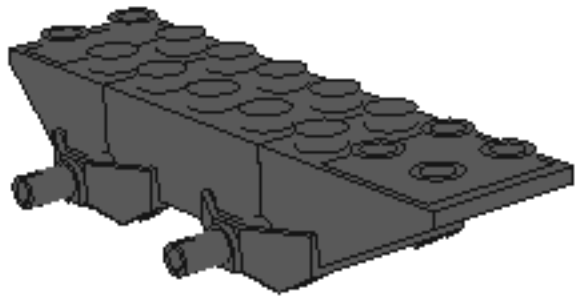

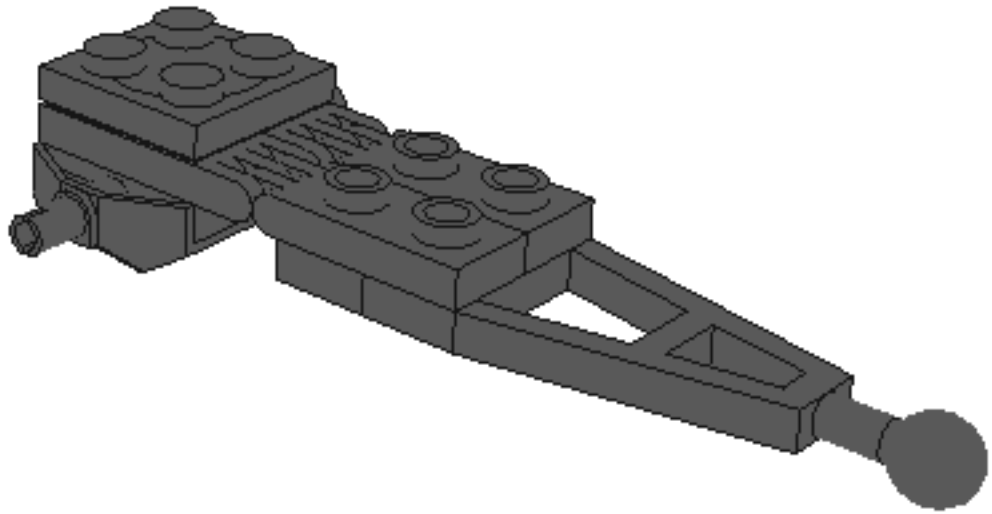

© Brickbuilder - 2006

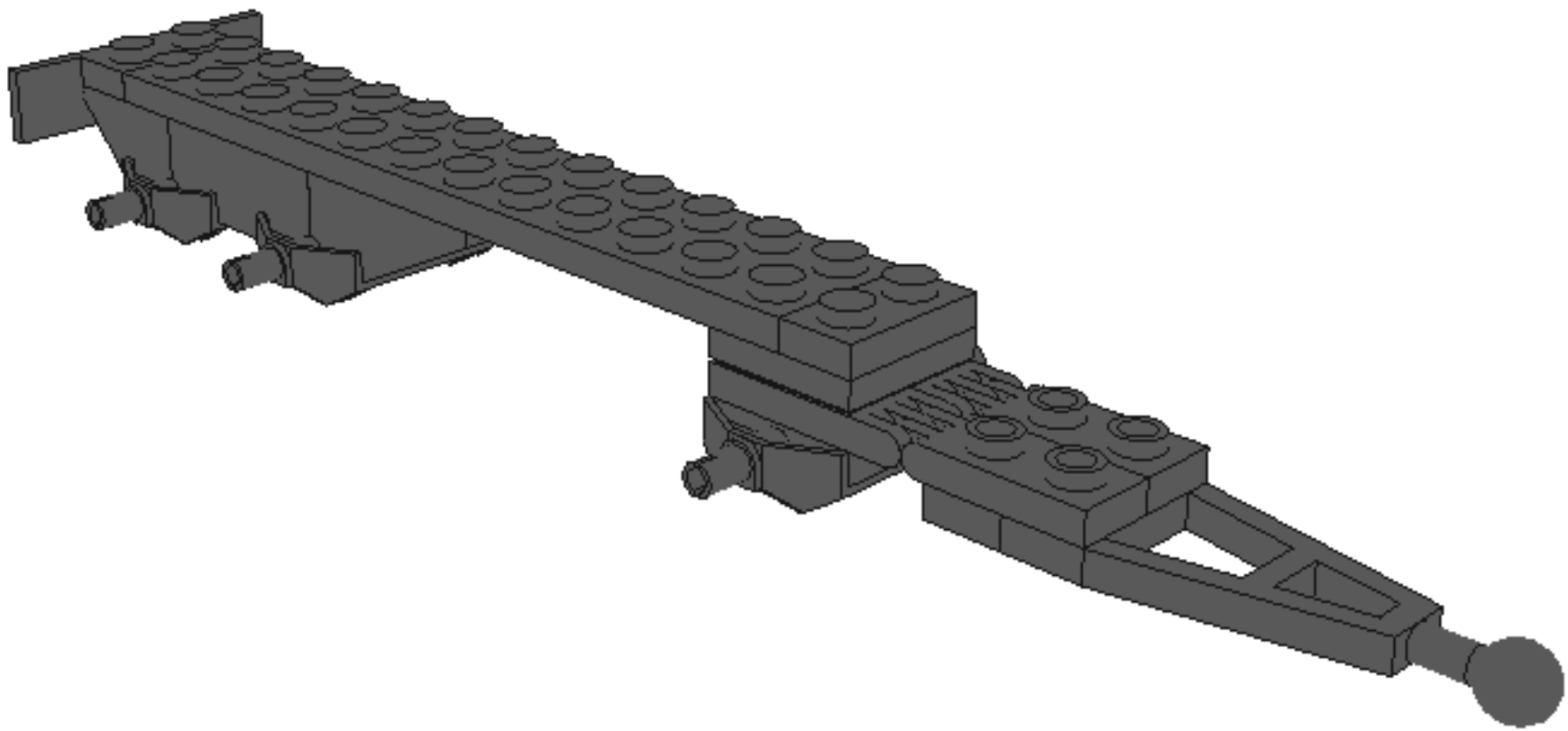

© Brickbuilder - 2006

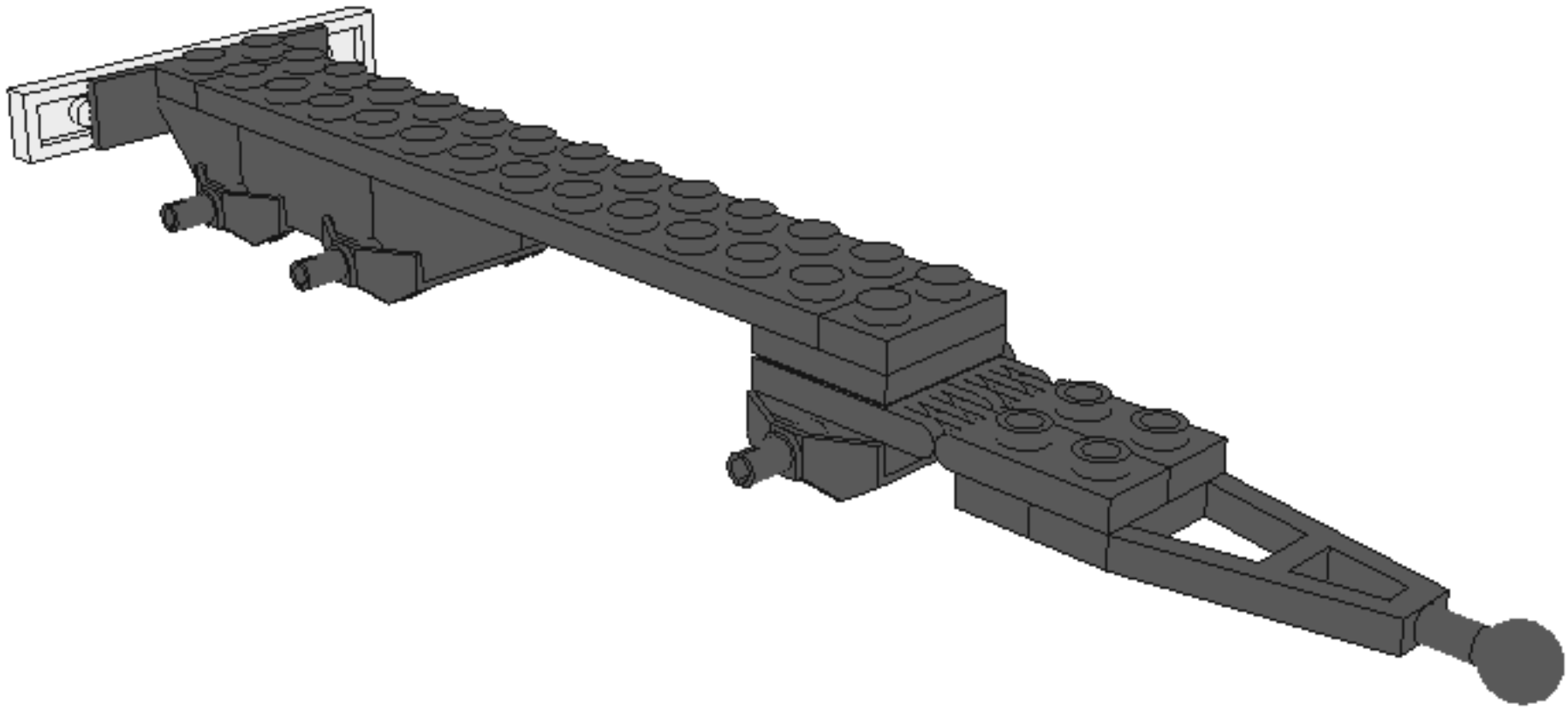

© Brickbuilder - 2006

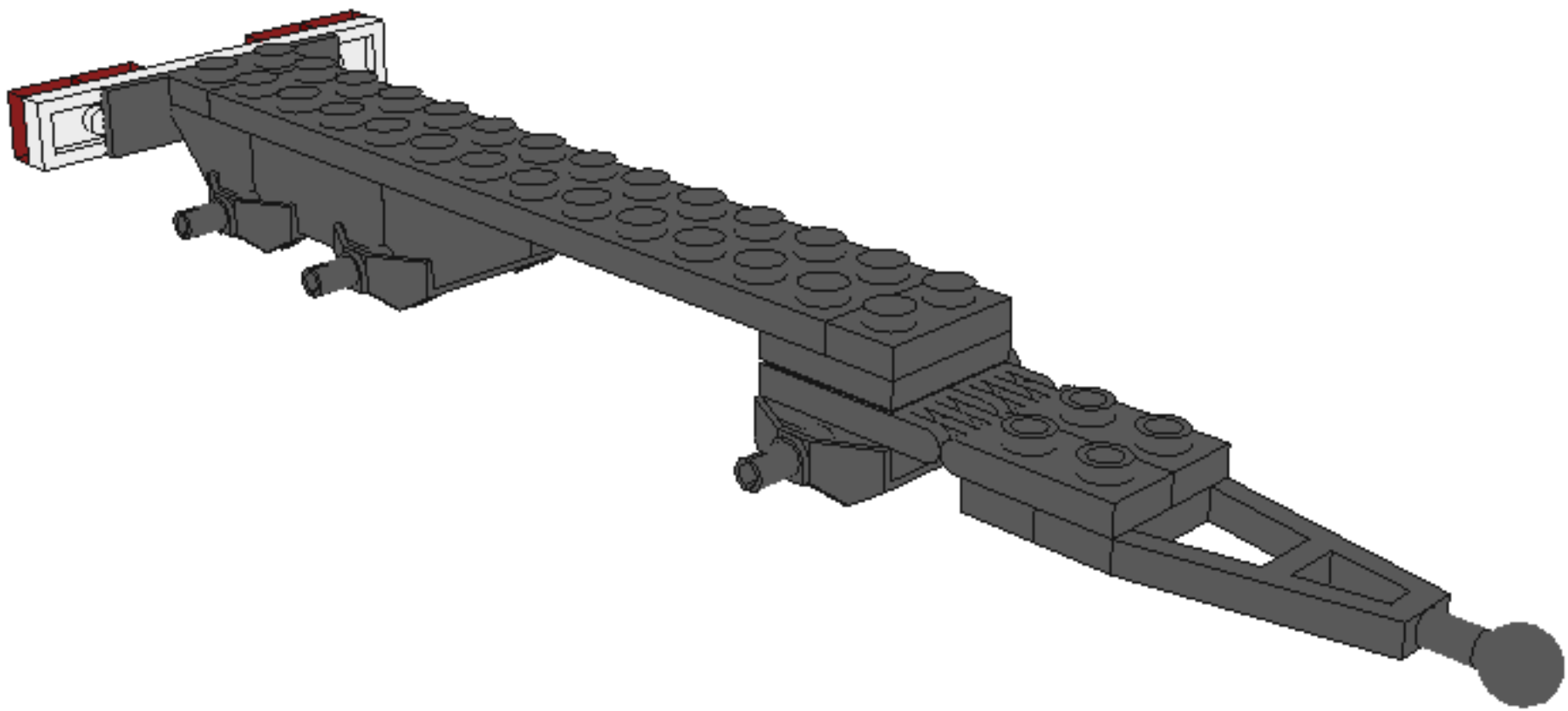

© Brickbuilder - 2006

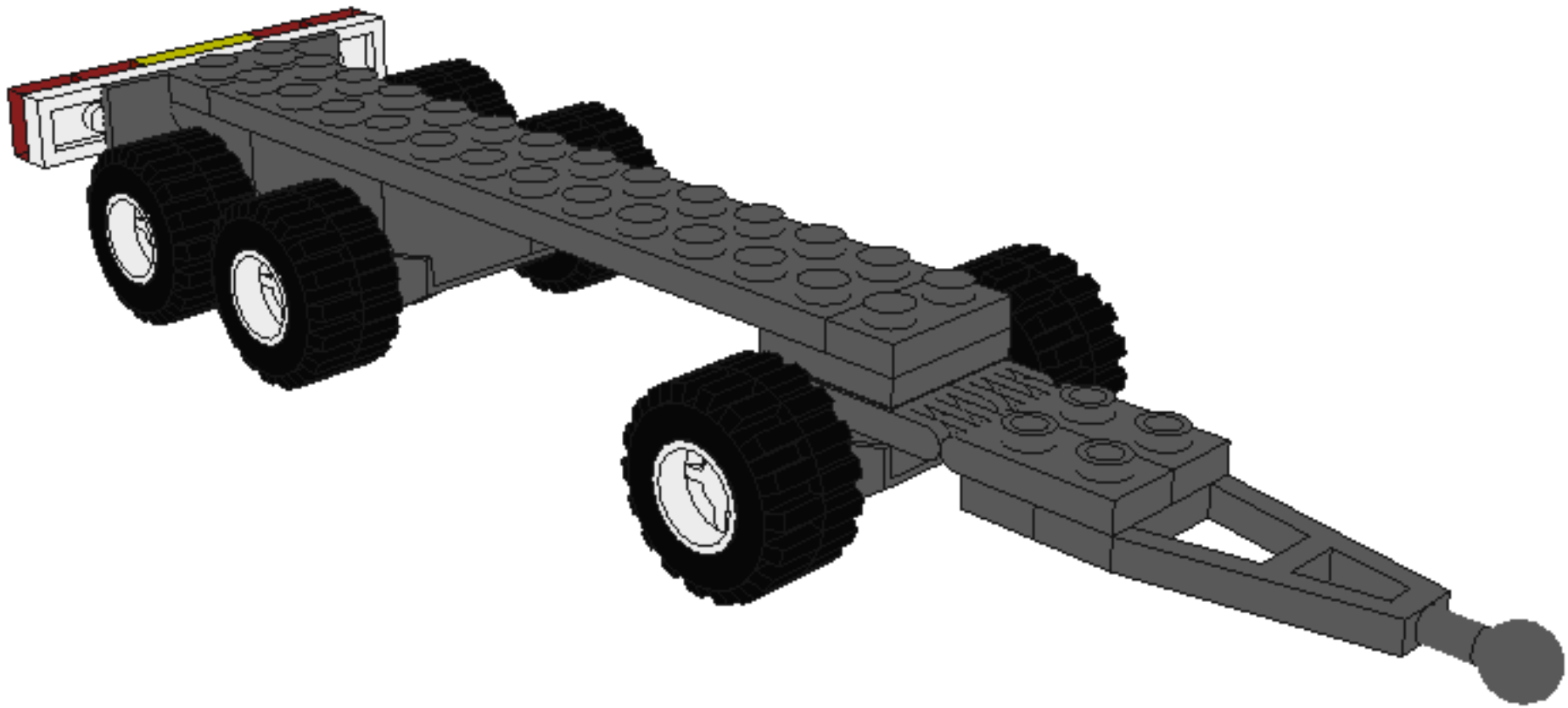

© Brickbuilder - 2006

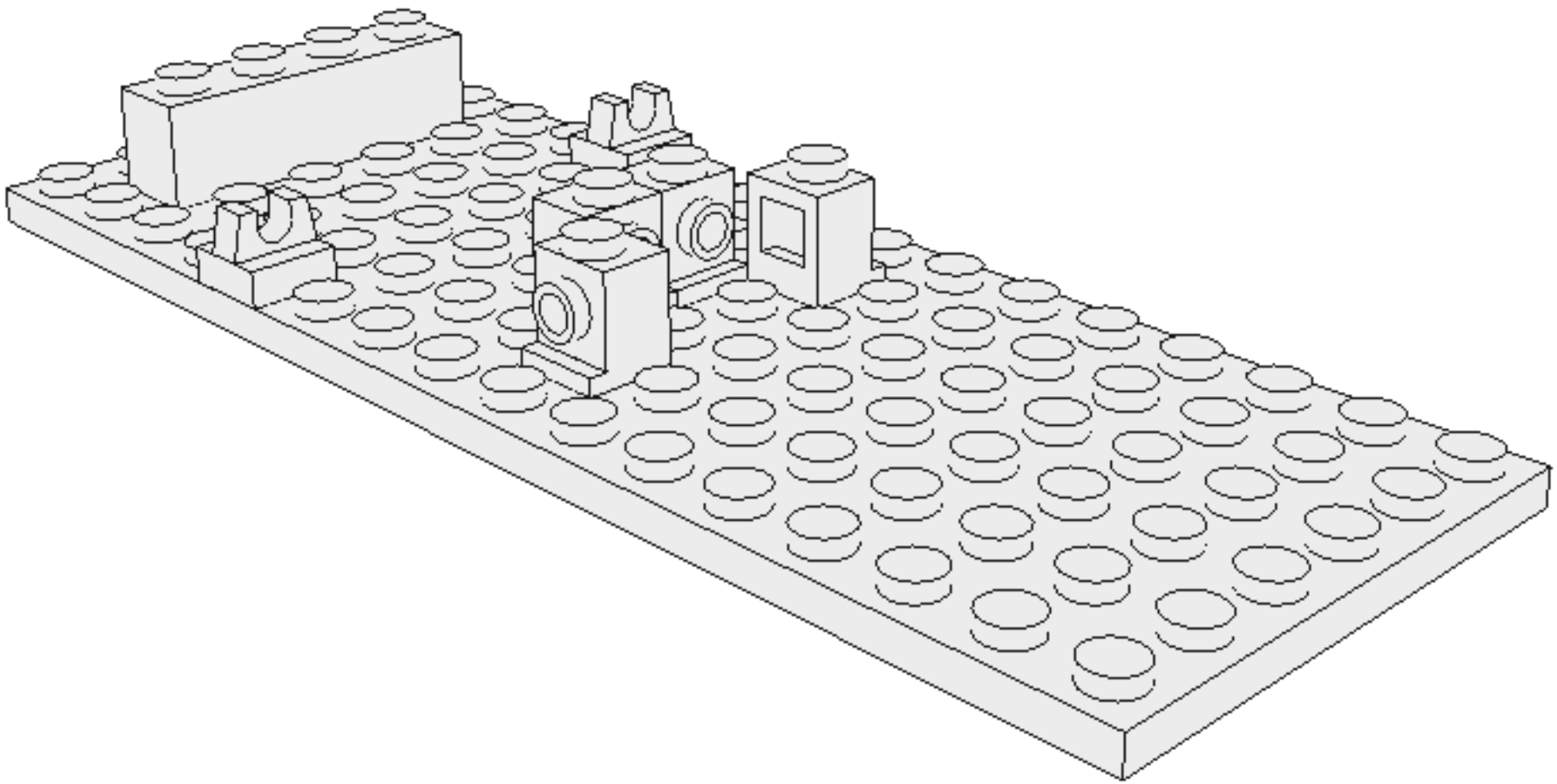

© Brickbuilder - 2006

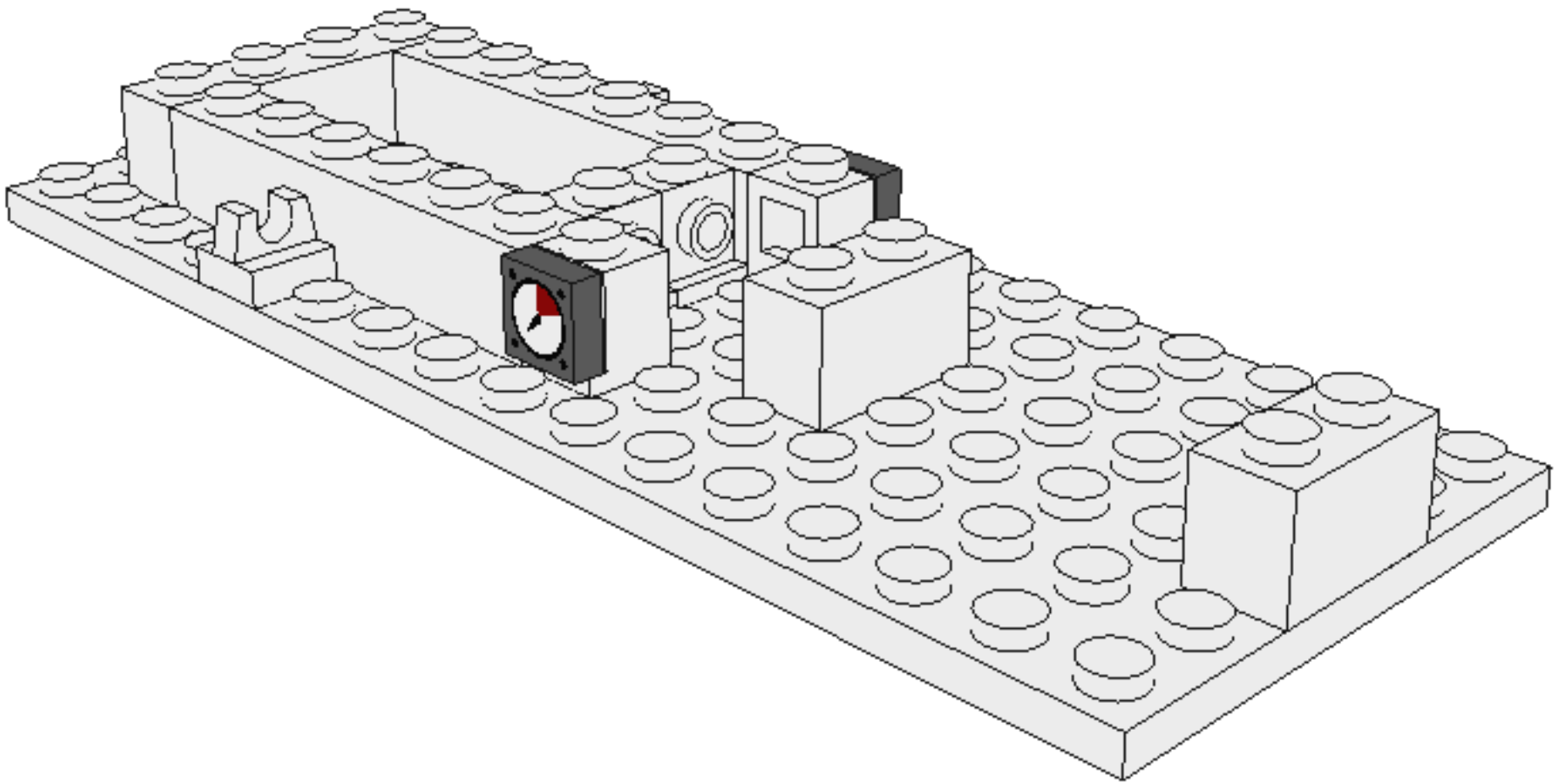

© Brickbuilder - 2006

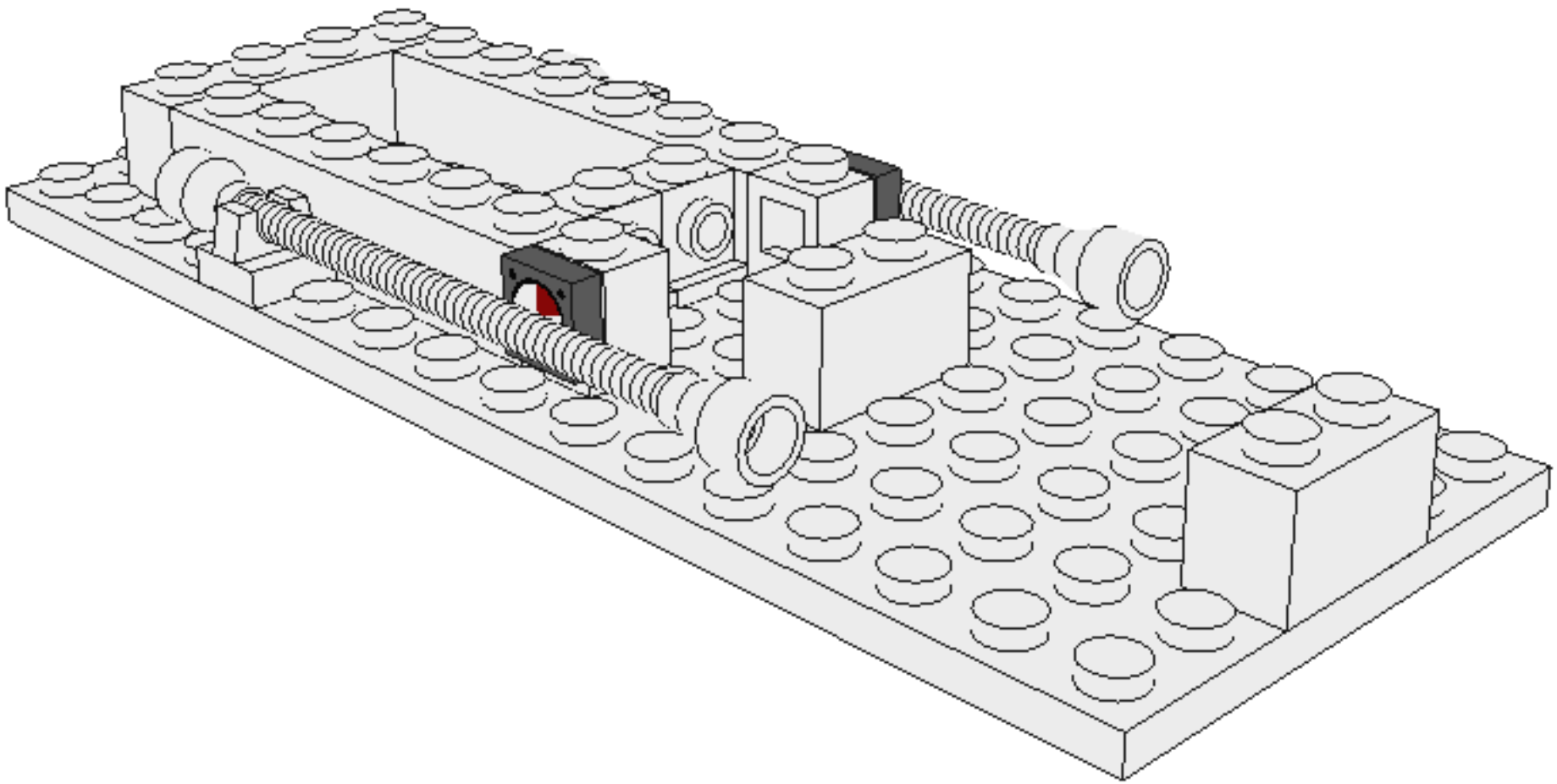

© Brickbuilder - 2006

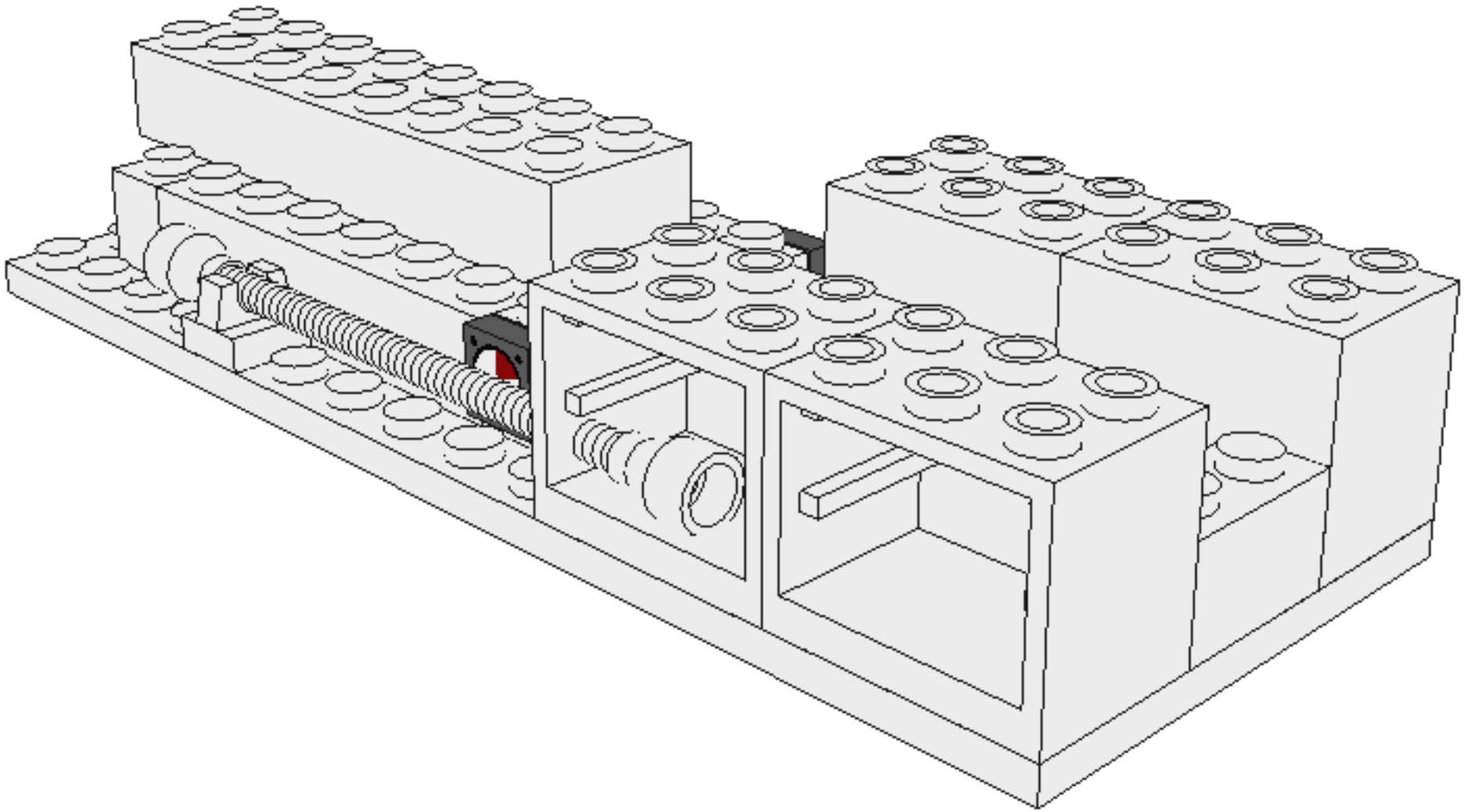

© Brickbuilder - 2006

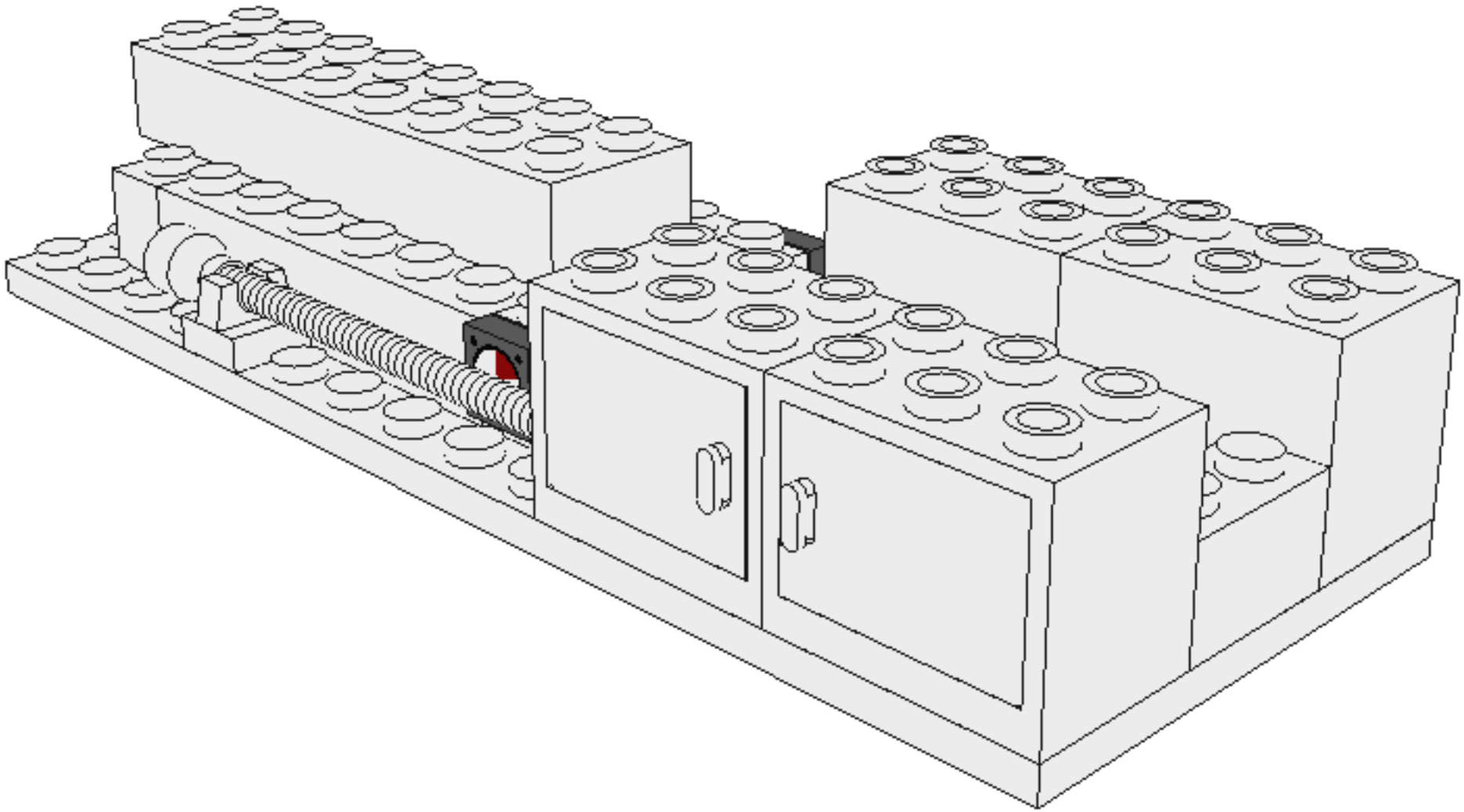

© Brickbuilder - 2006

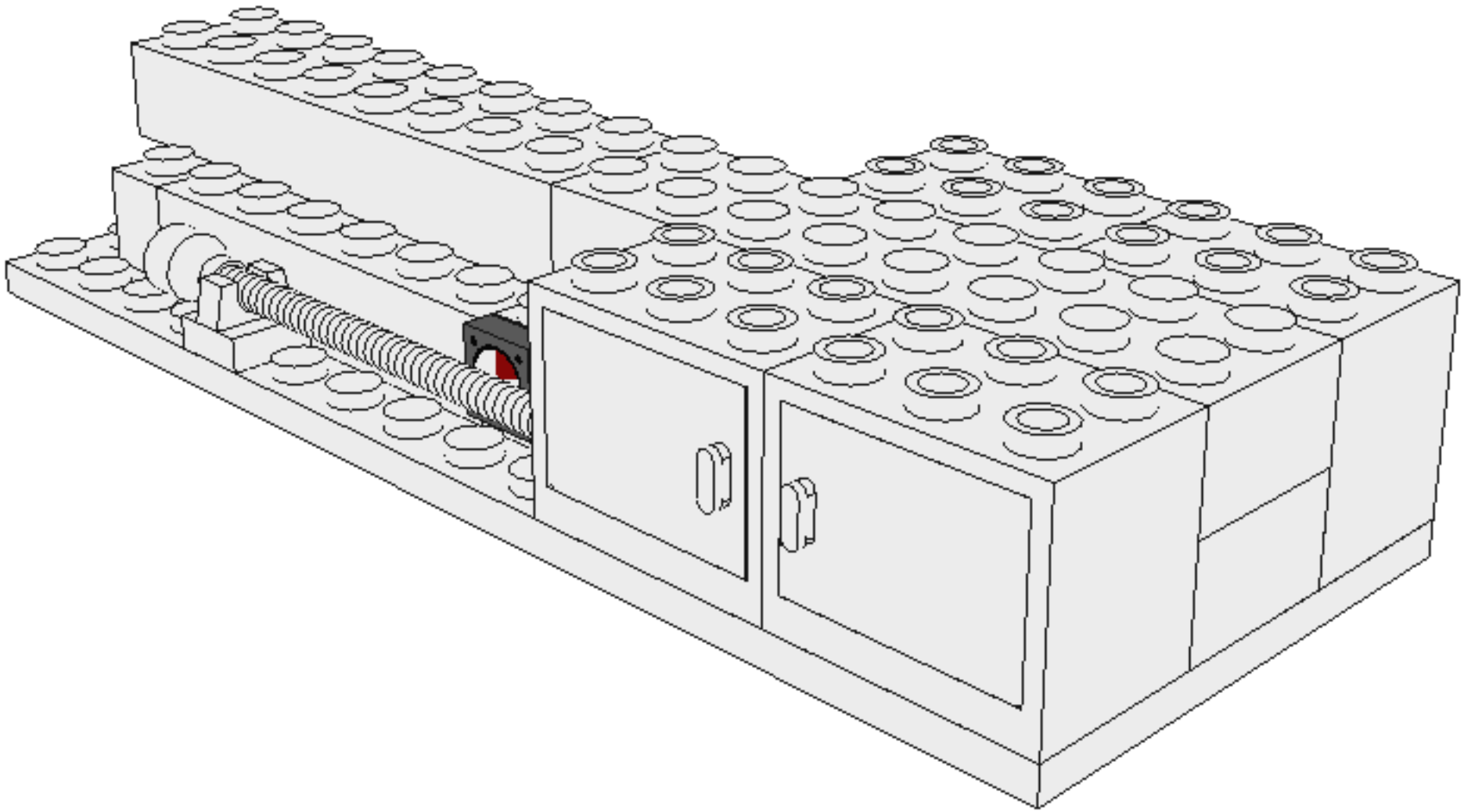

© Brickbuilder - 2006

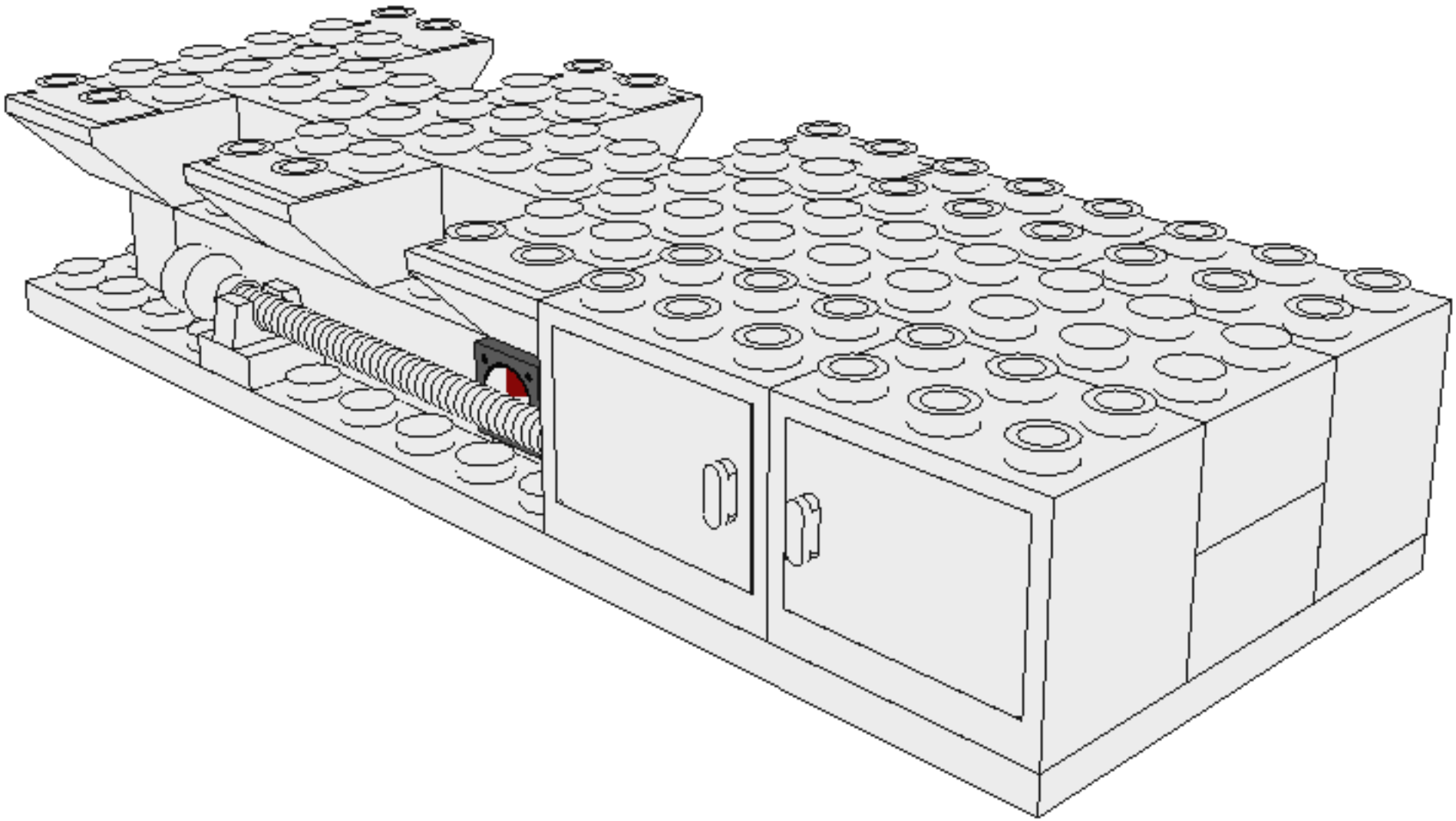

© Brickbuilder - 2006

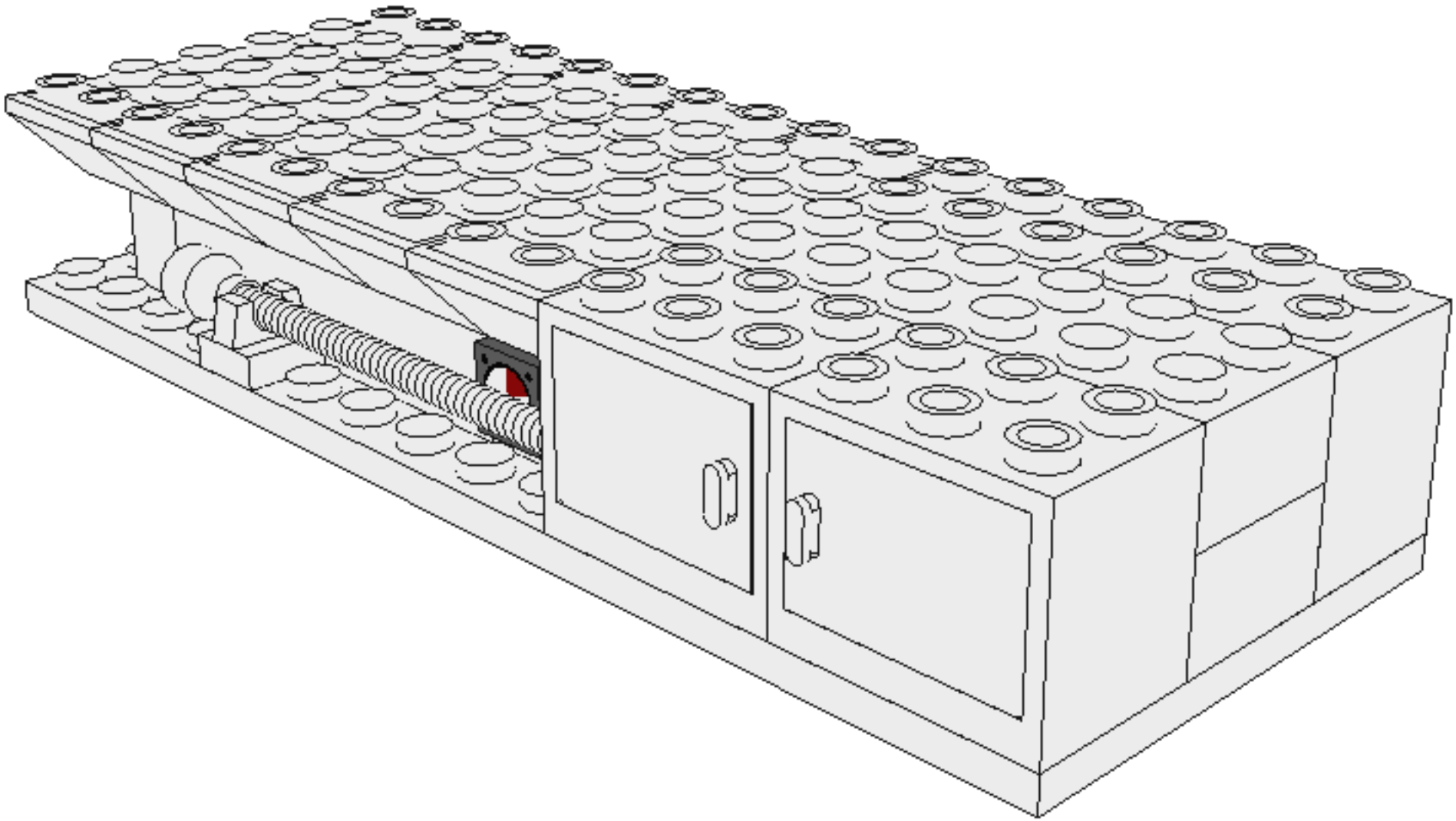

© Brickbuilder - 2006

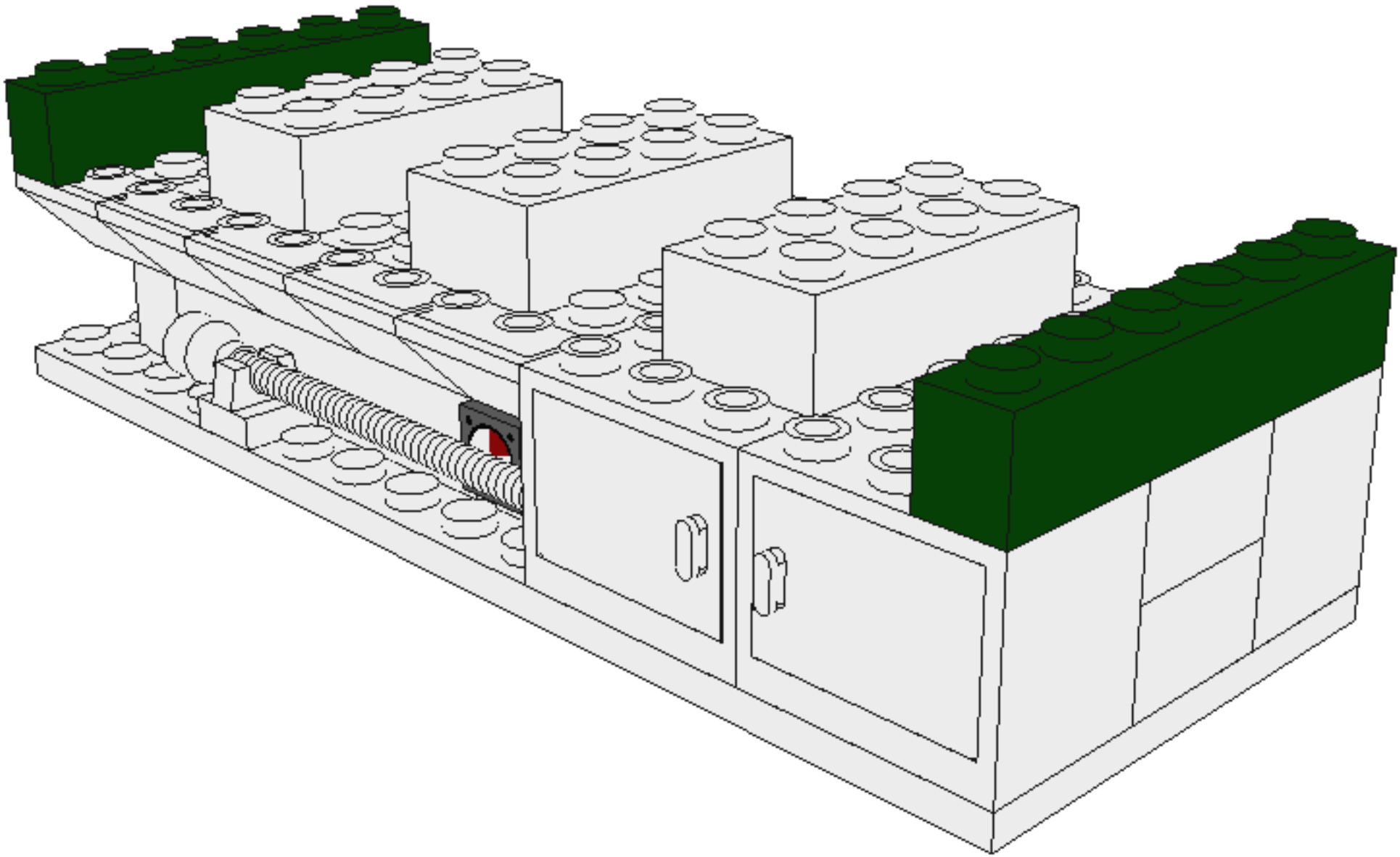

© Brickbuilder - 2006

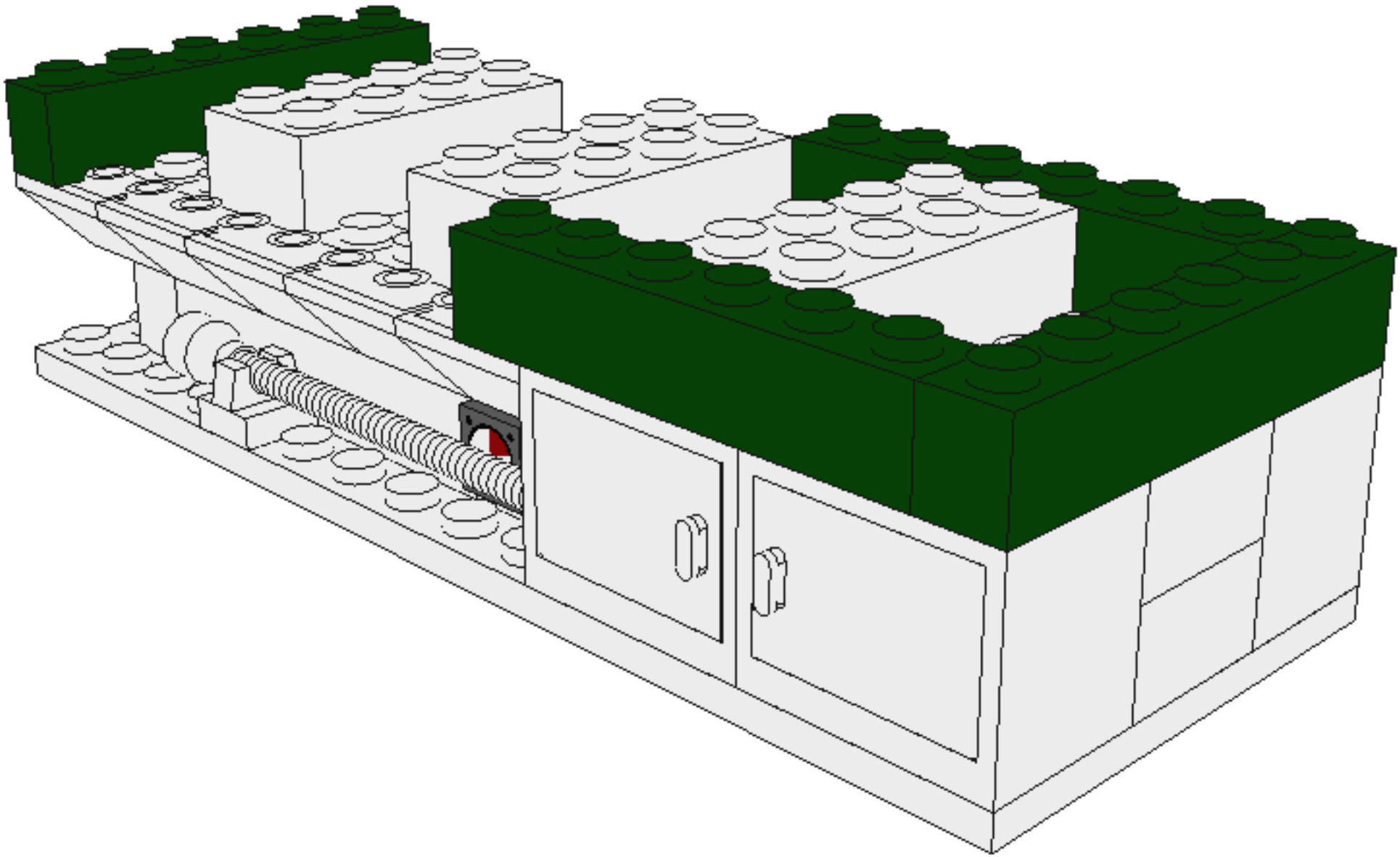

© Brickbuilder - 2006

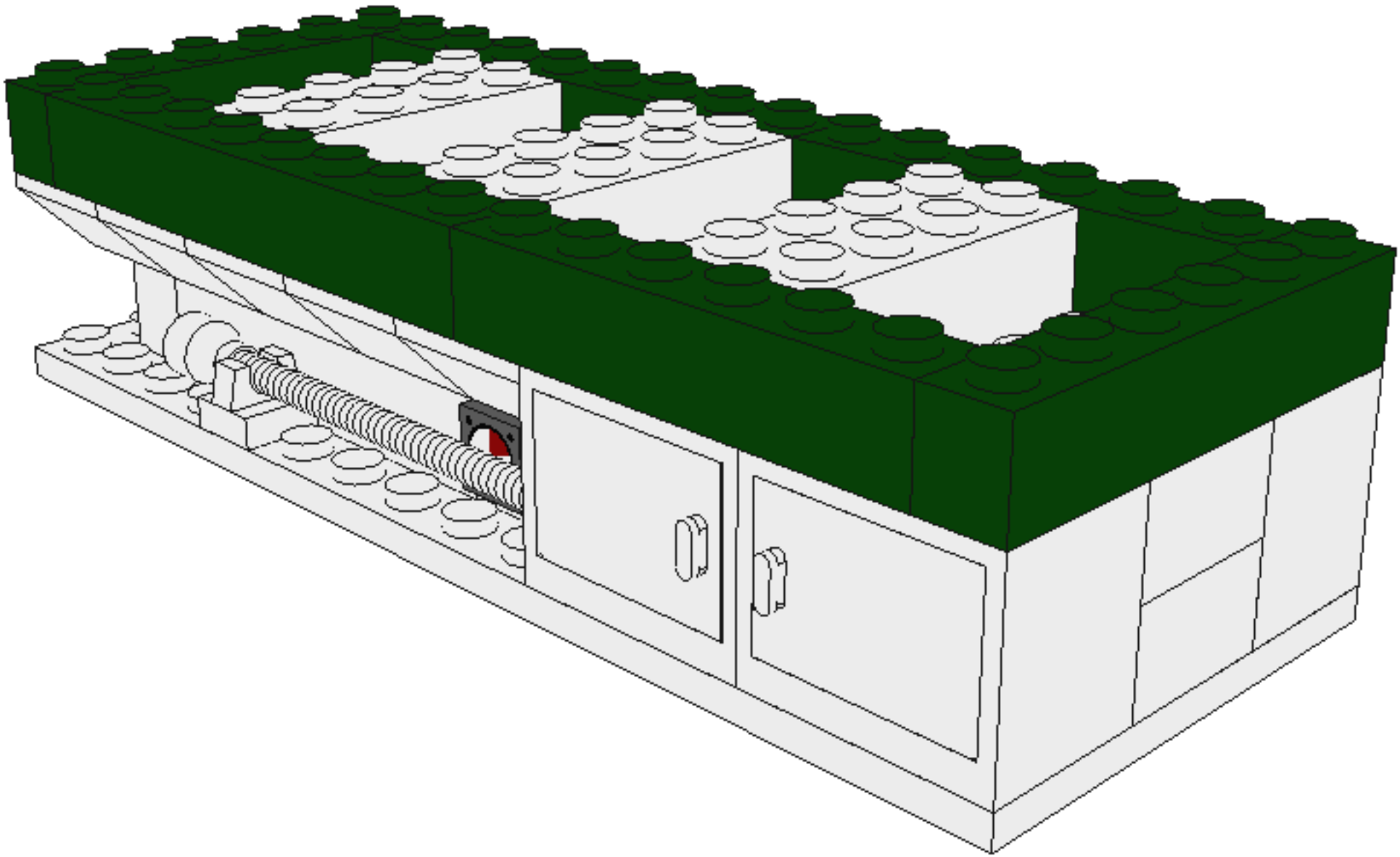

© Brickbuilder - 2006

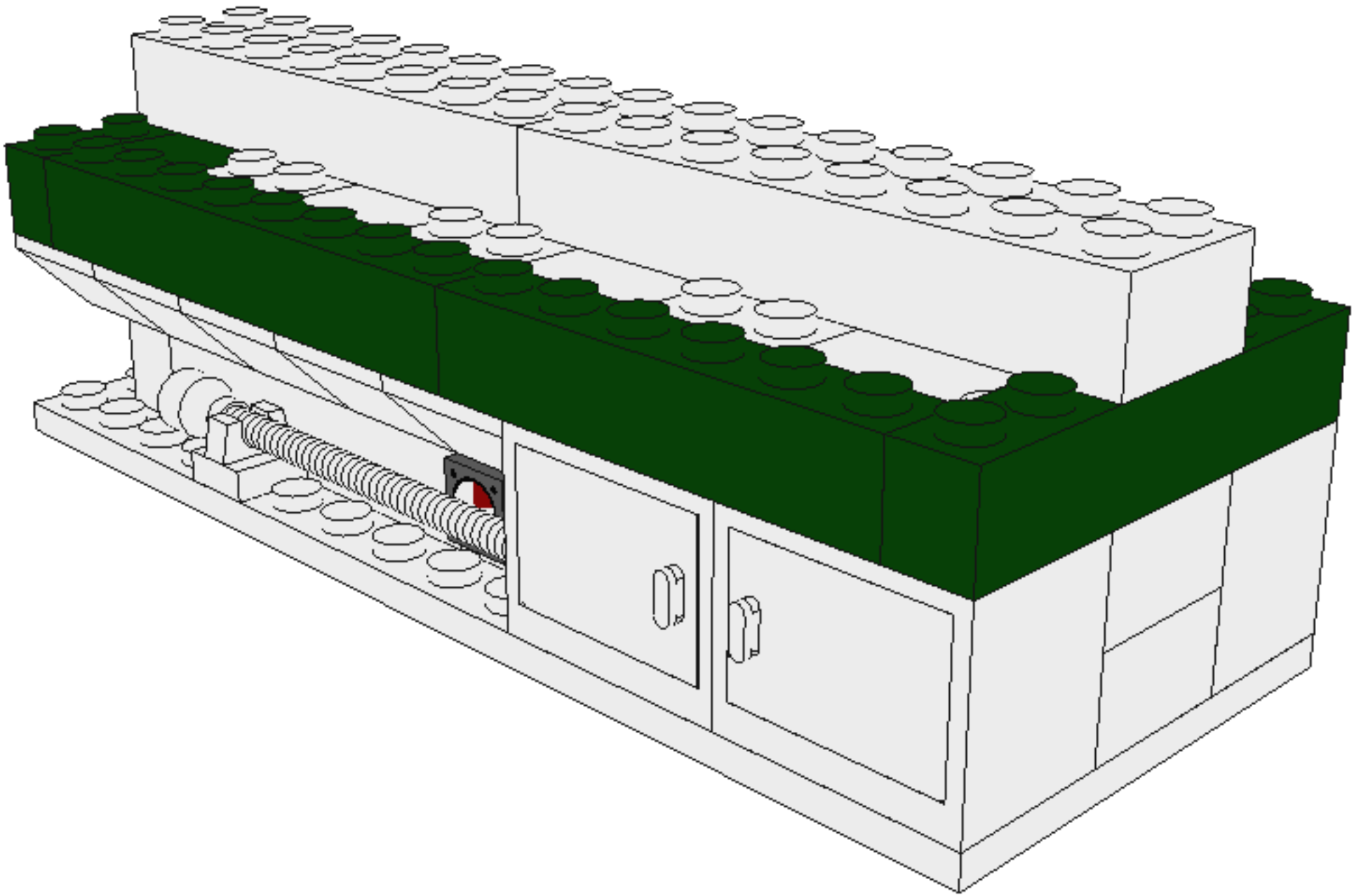

© Brickbuilder - 2006

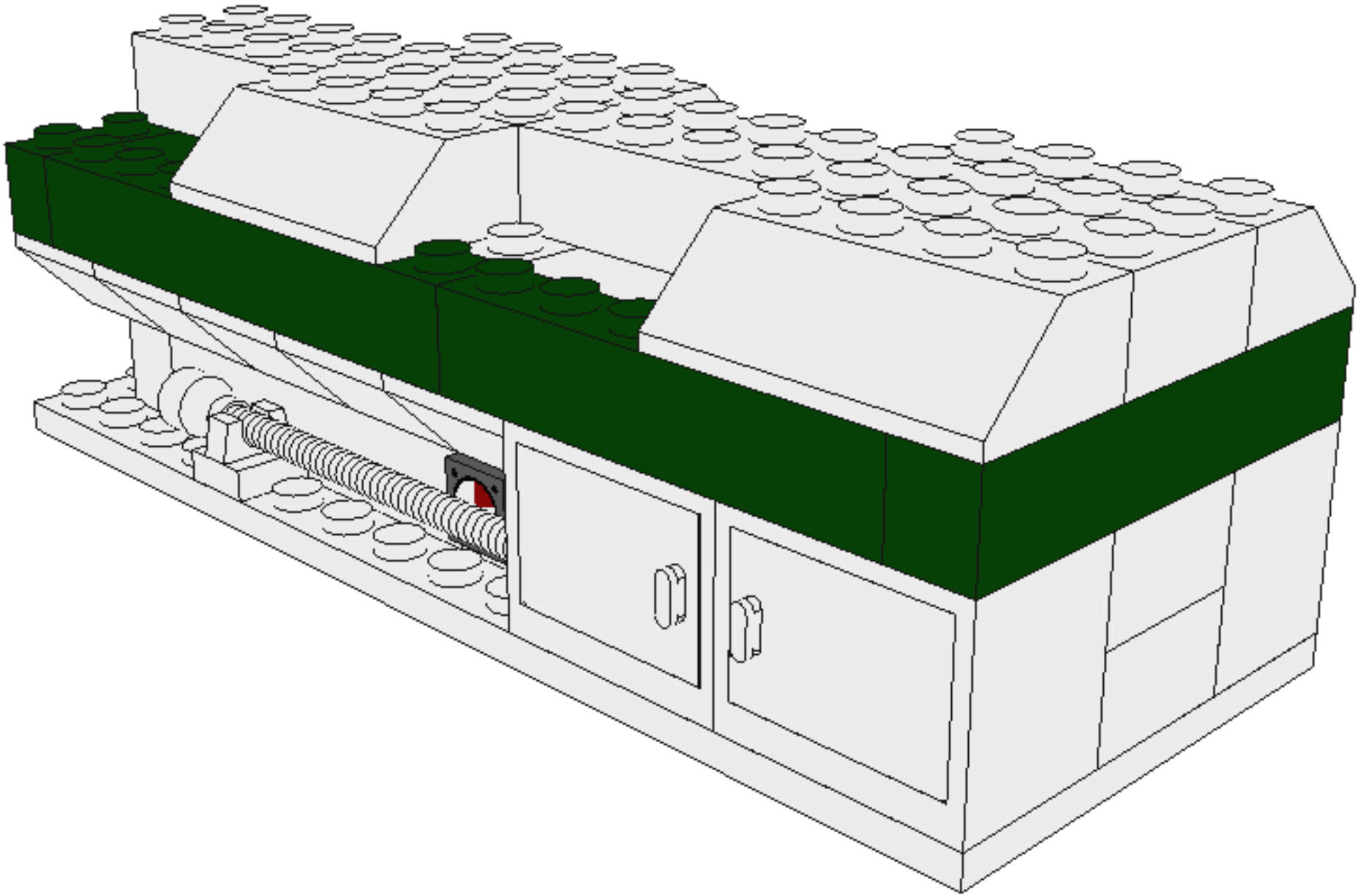

© Brickbuilder - 2006

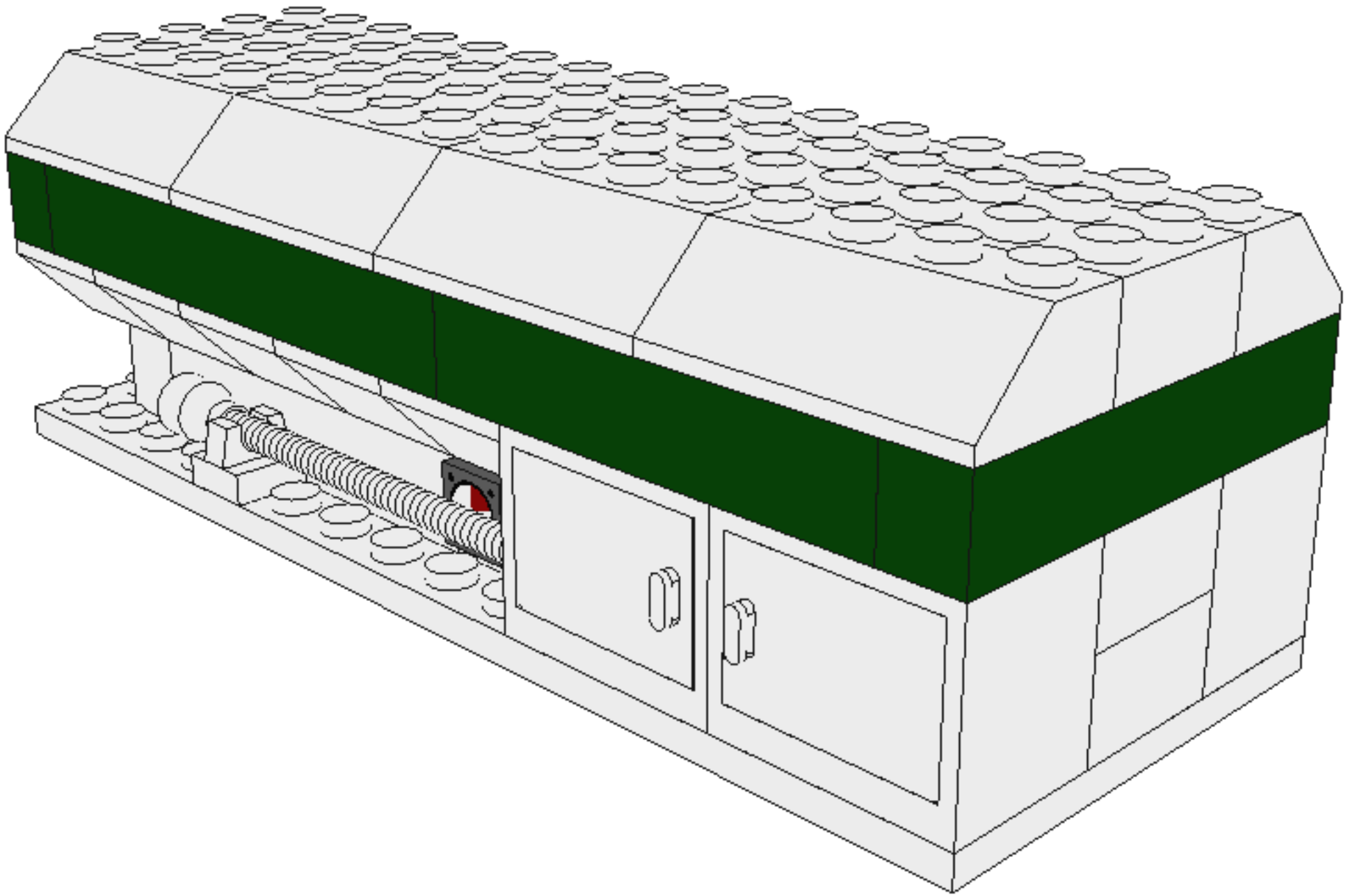

© Brickbuilder - 2006

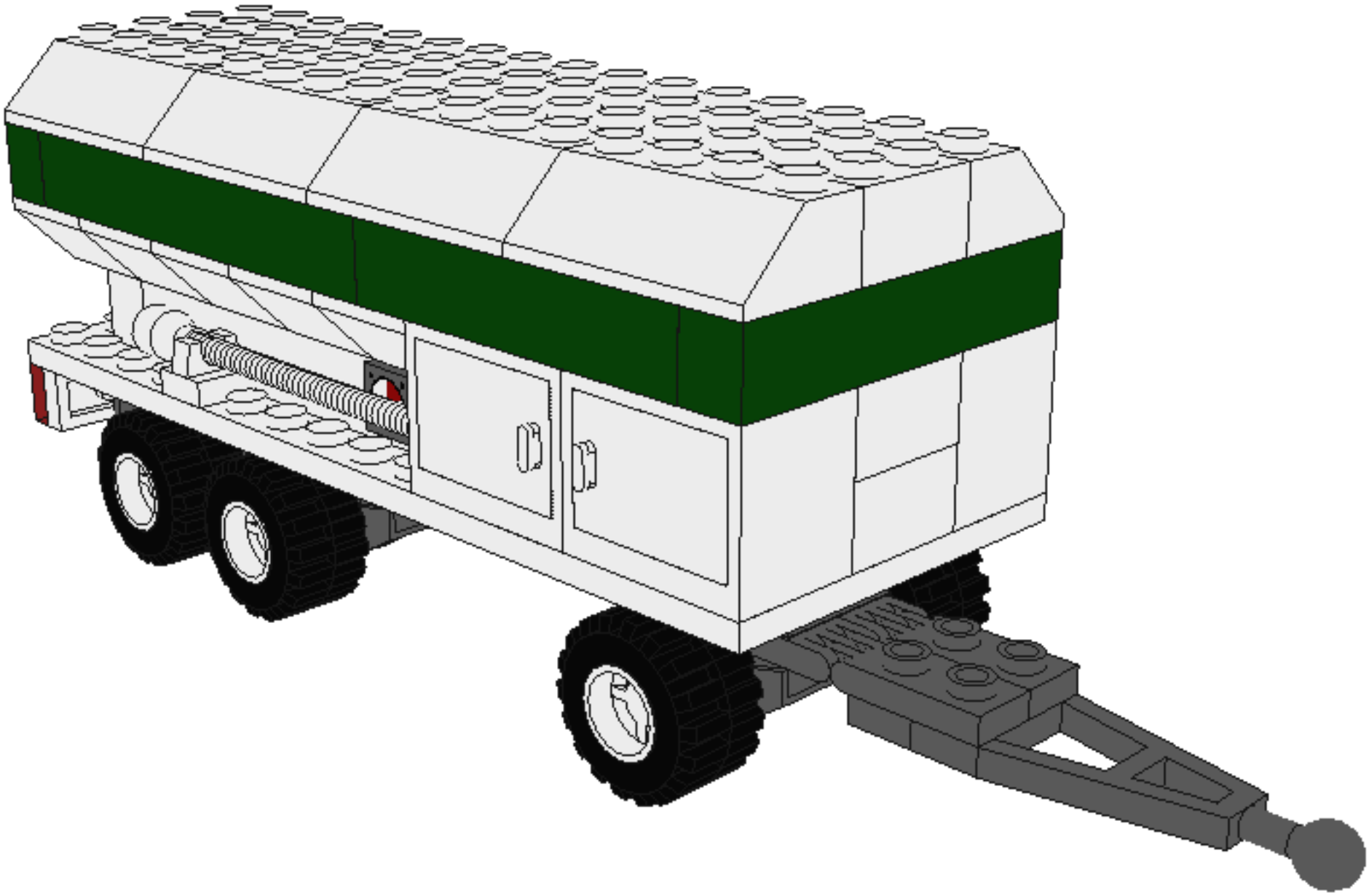

© Brickbuilder - 2006

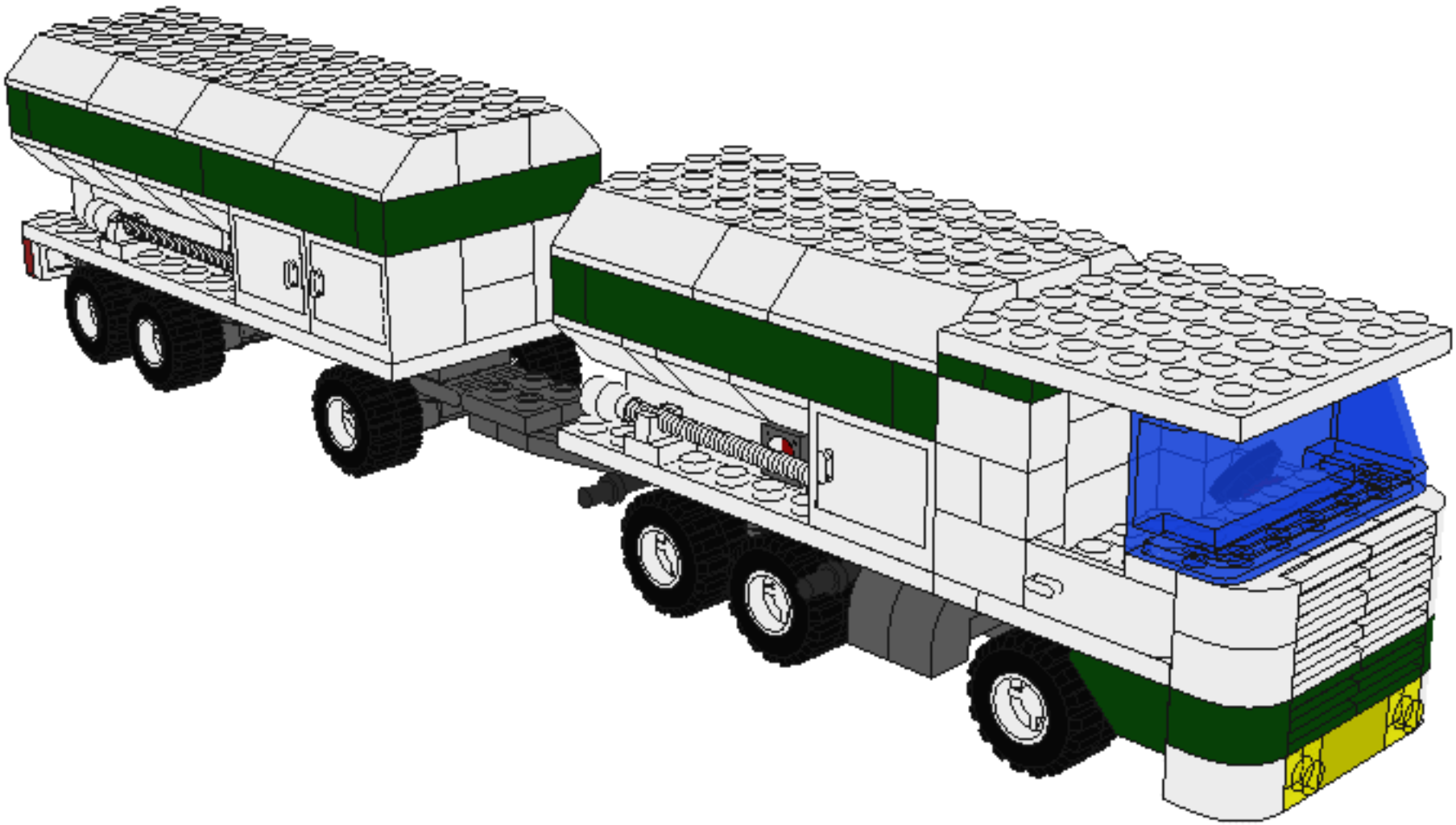

© Brickbuilder - 2006